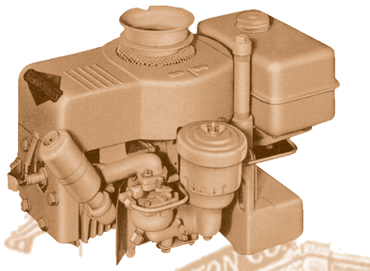

Model 6H

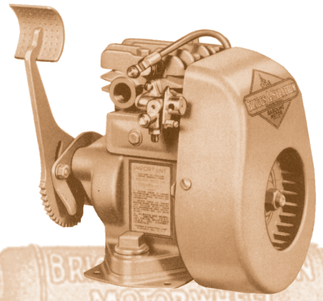

Model WM

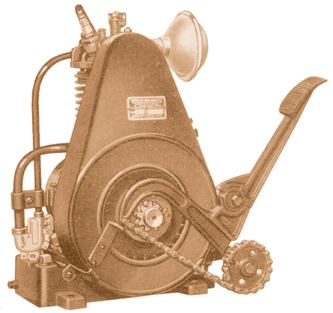

Model FH

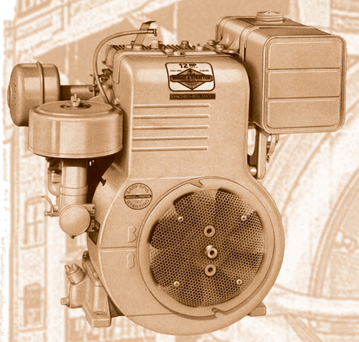

Model 300400

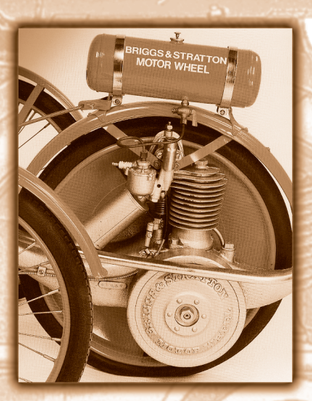

Motorwheel

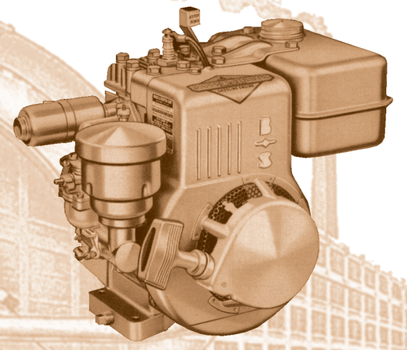

Model 6B

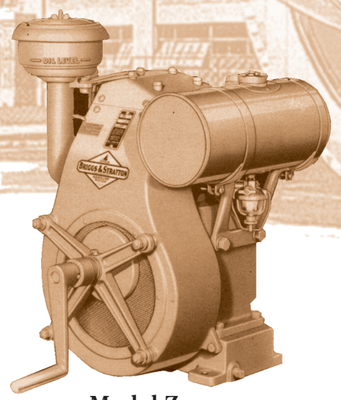

Model Z

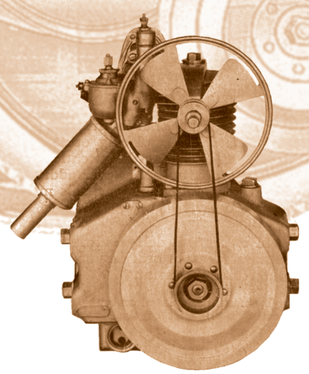

Model P

0 24847 26489 0

BRIGGS & STRATTON CORPORATION
Milwaukee, WI 53201
Part No. CE8069-5/00 Printed in U.S.A.
www.briggsandstratton.com

BRIGGS & STRATTON CORP., MILWAUKEE, WIS., U.S.A.

Briggs & Stratton Co. Milwaukee Wisconsin

Briggs & Stratton Co. Milwaukee Wisconsin

Service Manual for Out of Production Engines 1919 - 1981

5/00

Repairman's Handbook

4 Cycle Air-Cooled Engine

BASCo

ORIGINAL BRIGGS & STRATTON MILWAUKEE, WIS., U.S.A. SERVICE PARTS ®

Service Manual for Out of Production Engines

1919 - 1981

Breaker Point & Magnavac Ignition Systems

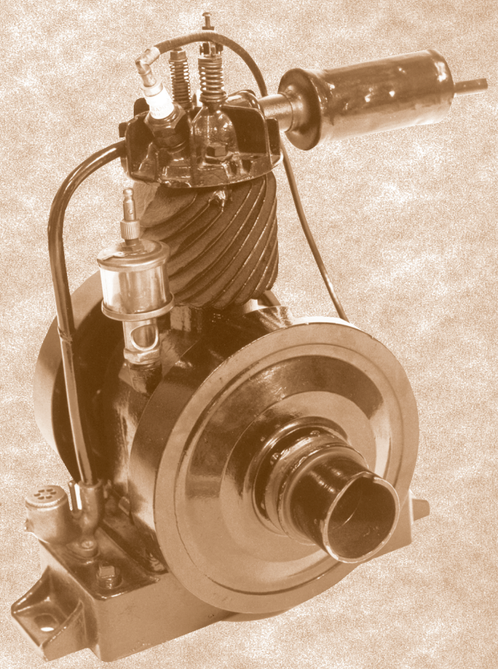

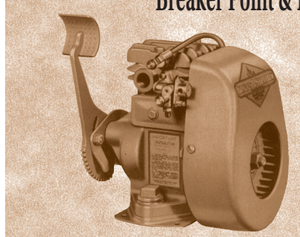

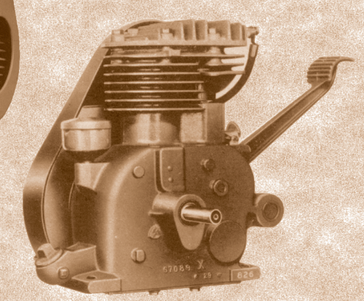

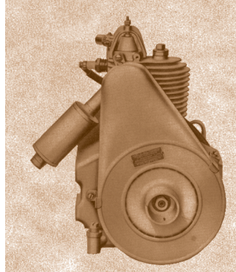

Cast Iron Models A's - ZZ's, 5's - 320000's

Aluminum Models 6B's, 8B's and 60000's - 253400's

Briggs & Stratton Co. Milwaukee Wisconsin

TABLE OF CONTENTS

GENERAL INFORMATION . . . . . **Section 1**

IGNITION . . . . . **Section 2**

AIR CLEANERS, CARBURETORS & GOVERNORS . . . . . **Section 3**

COMPRESSION . . . . . **Section 4**

PISTONS, RINGS & CONNECTING RODS . . . . . **Section 5**

OIL SYSTEMS . . . . . **Section 6**

ALTERNATORS, ELECTRIC, MECHANICAL &
REWIND STARTERS, STARTER – GENERATORS . . . . . **Section 7**

CRANKSHAFTS, CAM GEARS . . . . . **Section 8**

CYLINDERS . . . . . **Section 9**

BEARINGS . . . . . **Section 10**

SPECIAL INSTRUCTIONS . . . . . **Section 11**

TOOLS . . . . . **Section 12**

English to Metric Conversion Table

Fraction	Decimal	mm		Fraction	Decimal	mm
1/64	0.0156	0.3969		33/64	0.5156	13.0969
1/32	0.0312	0.7938		17/32	0.5312	13.4938
3/64	0.0469	1.1906		35/64	05469	13.8906
1/16	0.0625	1.5875		9/16	0.5625	14.2875
5/64	0.0781	1.9844		37/64	0.5781	14.6844
3/32	0.0938	2.3812		19/32	0.5938	15.0812
7/64	0.1094	2.7781		39/64	0.6094	15.4781
1/8	0.1250	3.1750		5/8	0.6250	15.8750
9/64	0.1406	3.5719		41/64	0.6406	16.2719
5/32	0.1562	3.9688		21/32	0.6562	16.6688
11/64	0.1719	4.3656		43/64	0.6719	17.0656
3/16	0.1875	4.7625		11/16	0.6875	17.4625
13/64	0.2031	5.1594		45/64	0.7031	17.8594
7/32	0.2188	5.5562		23/32	0.7188	18.2562
15/64	0.2344	5.9531		47/64	0.7344	18.6531
1/4	0.2500	6.3500		3/4	0.7500	19.0500
17/64	0.2656	6.7469		49/64	0.7656	19.4469
9/32	0.2812	7.1438		25/32	0.7812	19.8438
19/64	0.2969	7.5406		51/64	0.7969	20.2406
5/16	0.3125	7.9375		13/16	0.8125	20.6375
21/64	0.3281	8.3344		53/64	0.8281	21.0344
11/32	0.3438	8.7312		27/32	0.8438	21.4312
23/64	0.3594	9.1281		55/64	0.8594	21.8281
3/8	0.3750	9.5250		7/8	0.8750	22.2250
25/64	0.3906	9.9219		57/64	0.8906	22.6219
13/32	0.4062	10.3188		29/32	0.9062	23.0188
27/64	0.4219	10.7156		59/64	0.9219	23.4156
7/16	0.4375	11.1125		15/16	0.9375	23.8125
29/64	0.4531	11.5094		61/64	0.9531	24.2094
15/32	0.4688	11.9062		31/32	0.9688	24.6062
31/64	0.4844	12.3031		63/64	0.9844	25.0031
1/2	0.5000	12.7000		1	1.0000	25.4000

Drill Size – Decimal Equivalent In Inches

60——.040	39——.0995	20——.161	1——.228	Q——.332
59——.041	38——.1015	19——.166	A——.234	R——.339
58——.042	37——.104	18——.1695	*15/64*–.2344	*11/32*–.3438
57——.043	36——.1065	*11/64*–.1719	B——.238	S——.348
56——.0465	*7/64*—.1094	17——.173	C——.242	T——.358
55——.052	35——.110	16——.177	D——.246	*23/64*–.3594
54——.055	34——.111	15——.180	E, *1/4*–.250	U——.368
53——.0595	33——.113	14——.182	F——.257	*3/8*——.375
1/16 —.0625	32——.116	13——.185	G——.261	V——.377
52——.0635	31——.120	*3/16*—.1875	*17/64*–.2656	W——.386
51——.067	*1/8*——.125	12——.189	H——.266	*25/64*–.3906
50——.070	30——.1285	11——.191	I——.272	X——.397
49——.073	29——.136	10——.1935	J——.277	Y——.404
48——.076	28——.1405	9——.196	K——.281	*13/32*–.4062
5/64 —.0781	*9/64*—.1406	8——.199	*9/32*—.2812	Z——.413
47——.0785	27——.144	7——.201	L——.290	*27/64*–.4219
46——.081	26——.147	*13/64*–.2031	M——.295	*7/16*—.4375
45——.082	25——.1495	6——.204	*19/64*–.2969	*29/64*–.4531
44——.086	24——.152	5——.2055	N——.302	*15/32*–.4688
43——.089	23——.154	4——.209	*5/16*—.3125	*31/64*–.4844
42——.0935	*5/32*—.1562	3——.213	O——.316	*1/2*——.500
3/32—.0938	22——.157	*7/32*—.2188	P——.323	
41——.096	21——.159	2——.221	*21/64*–.3281	
40——.098				

BEFORE OPERATING ENGINE

- Read entire Operating & Maintenance Instructions AND the instructions for the equipment this engine powers.*
- Failure to follow instructions could result in serious injury or death.

THE OPERATING & MAINTENANCE INSTRUCTIONS CONTAIN SAFETY INFORMATION TO

- Make you aware of hazards associated with engines
- Inform you of the risk of injury associated with those hazards, and
- Tell you how to avoid or reduce the risk of injury.

The safety alert symbol (⚠) is used to identify safety information about hazards that can result in personal injury.

A signal word (DANGER, WARNING, or CAUTION) is used with the alert symbol to indicate the likelihood and the potential severity of injury. In addition, a hazard symbol may be used to represent the type of hazard.

⚠ **DANGER** indicates a hazard which, if not avoided, **will result in death or serious injury.**

⚠ **WARNING** indicates a hazard which, if not avoided, **could result in death or serious injury.**

⚠ **CAUTION** indicates a hazard which, if not avoided, **might result in minor or moderate injury.**

CAUTION, when used **without** the alert symbol, indicates a situation that **could result in damage to the engine.**

HAZARD SYMBOLS AND MEANINGS

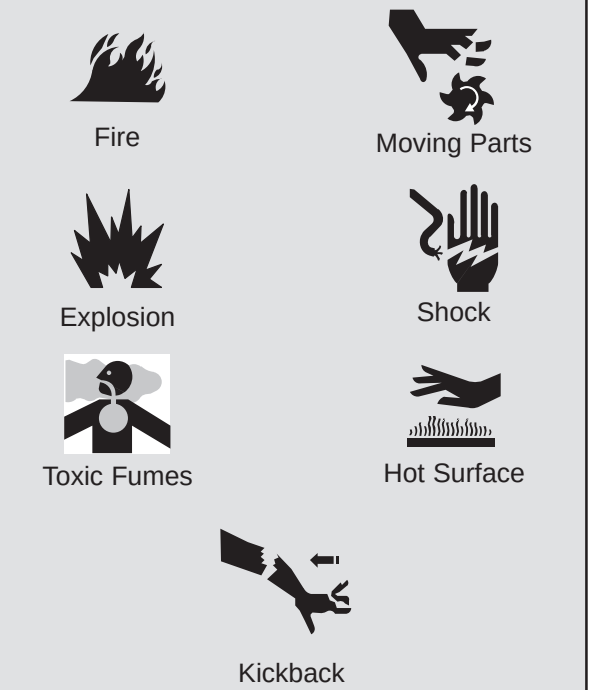

⚠ WARNING ⚠

The engine exhaust from this product contains chemicals known to the State of California to cause cancer, birth defects, or other reproductive harm.

* Briggs & Stratton does not necessarily know what equipment this engine will power. For that reason, you should carefully read and understand the operating instructions for the equipment on which your engine is placed.

SAFETY

WARNING

Gaseous fuels are extremely flammable and readily form explosive air-vapor mixtures at ambient temperatures.

IF YOU SMELL GAS:

- DO NOT start the engine.
- DO NOT actuate any electrical switches.
- DO NOT use the phone in the vicinity.
- Evacuate the area.
- Contact the gas supplier or fire department.

REMEMBER:

- Vapor is heavier than air and may travel to remote locations.
- Keep all flames, sparks, pilot lights, and other ignition sources away from the area where the engine is operated or repaired.
- DO NOT smoke when operating or repairing the engine.
- DO NOT store gasoline or other flammable vapors or liquids in the vicinity of the engine.
- BEFORE doing any service work to the engine, shut off the gas supply.
- After initial installation or servicing, check for gas leaks. DO NOT use an open flame. Apply very soapy water or leak test solution with a brush and look for bubbles.

WARNING

Unintentional sparking can result in fire or electric shock.

Unintentional start-up can result in entanglement, traumatic amputation, or laceration.

BEFORE PERFORMING ADJUSTMENTS OR REPAIRS

- Disconnect spark plug wire and keep it away from spark plug.
- Disconnect battery at negative terminal (only engines with electric start).

WHEN TESTING FOR SPARK

- Use approved spark plug tester.
- DO NOT check for spark with spark plug removed.

WARNING

All fuel components should be in good condition and properly maintained.

- Repairs should only be made with factory approved parts.
- Repair work should be done by a qualified technician.
- Flexible supply lines should be checked regularly to make sure they are in good condition. Replace damaged or leaking components.

SAFETY

WARNING

Engines give off carbon monoxide, an odorless, colorless, poison gas.

Breathing carbon monoxide can cause nausea, fainting or death.

- Start and run engine outdoors.
- DO NOT start or run engine in enclosed area, even if doors or windows are open.
- Inhalation of high concentrations of vapor, even for short periods, can cause unconsciousness or might prove fatal.
- Inhalation may cause irritation to the nose and throat, headache, nausea, vomiting, dizziness, and drowsiness.
- Unconsciousness or asphyxiation may result in poorly ventilated areas or confined spaces.

WARNING

Running engines produce heat. Engine parts, especially muffler, become extremely hot.

Severe thermal burns can occur on contact.

Combustible debris, such as leaves, grass, brush, etc. can catch fire.

- Allow muffler, engine cylinder and fins to cool before touching.
- Remove accumulated combustibles from muffler area and cylinder area.
- Install and maintain, in working order, a spark arrester before using equipment on forest-covered, grass-covered, brush-covered unimproved land. The state of California requires this (Section 4442 of the California Public Resources Code). Other states may have similar laws. Federal laws apply on federal land.

WARNING

Wear eye protection when doing repair work.

Frostbite can result from skin/eye contact with leaking LP liquid.

Section 1
GENERAL INFORMATION

Briggs & Stratton engines are of the same basic 4 stroke cycle design used in automobiles, aircraft, trucks, and tractors. As the name indicates, there are four strokes to one complete cycle:

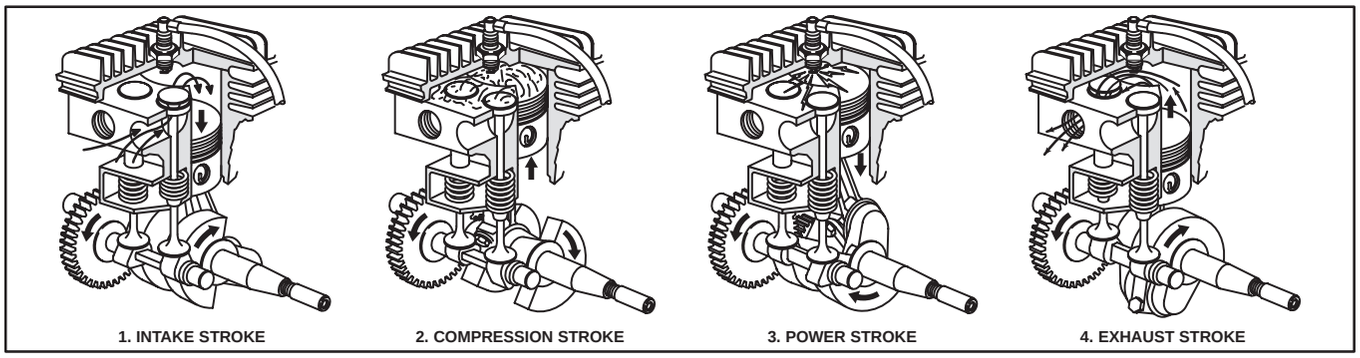

Fig. 1 – THE 4-STROKE CYCLE

1. INTAKE STROKE: The piston goes down, creating a vacuum in the cylinder which draws gas through open intake valve into the space above the piston.
2. COMPRESSION STROKE: The piston comes up with both valves closed, highly compressing the gas into the space left between the top of the piston and cylinder head.
3. POWER STROKE: At this point the magneto sends high tension current to the spark plug, firing or exploding the compressed gas and driving the piston down.
4. EXHAUST STROKE: Exhaust valve opens and the upward stroke of the piston forces out all of the burnt gases, thus completing the power cycle.

USE CLEAN GASOLINE

A good, clean, fresh, regular gasoline is recommended. A gasoline of too high test may form a vapor lock in the fuel line when engine gets hot. This interrupts the flow of gasoline and cause the engine to stop. The use of highly leaded gasoline also is to be avoided as it causes deposits on valve seats, spark plug points, and in the cylinder head, thereby shorting engine life.

CORRECT LUBRICATION IS IMPORTANT

Yester Years Standards:

We recommend the use of Mobil oil “Arctic” or other high grade oil having a low carbon residue and a body not heavier than S.A.E. No. 20 for operating the engines in temperatures of 32° and above. For temperatures below 32° use Mobil oil “Arctic Special” or other high grade oil not heavier than S.A.E. No. 10W. Oil sump should be filled to the top of the filler plug after each 5 hours of engine operation.

Today’s Standards:

* **CAUTION:** Air cooled engines run hotter than automotive engines. The use of non-synthetic multi-viscosity oils (5W-30, 10W-30, etc.) in temperatures above 40° F (4° C) will result in higher than normal oil consumption. When using a multi-viscosity oil, check oil level more frequently.

** **CAUTION:** SAE 30 oil, if used below 40° F (4° C), will result in hard starting and possible engine bore damage due to inadequate lubrication.

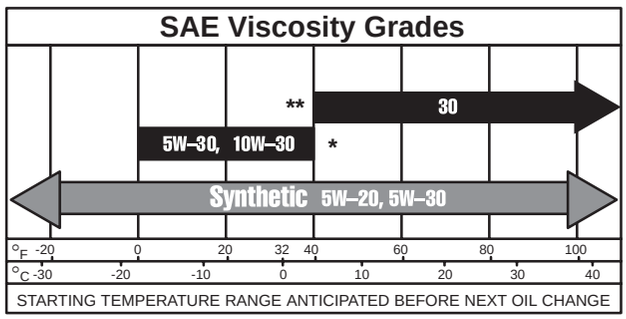

Note: Synthetic oil meeting ILSAC GF-2, API certification mark and API service symbol (shown at left) with “SJ/CF ENERGY CONSERVING” or higher, is an acceptable oil at all temperatures. **Use of synthetic oil does not alter required oil change intervals**.

OIL SHOULD BE CHANGED AFTER EACH 25 HOURS OF ENGINE OPERATION. In normal running of any engine, small particles of metal from the cylinder walls, pistons, and bearings will gradually work into the oil. Dust particles from the air also get into the oil. If the oil is not changed regularly, these foreign particles cause increased friction and a grinding action which shorten the life of the engine. Fresh oil also assists in cooling, for old oil gradually becomes thick and loses its cooling effect as well as its lubricating qualities.

Oil in the air cleaner should be changed every 25 hours of engine operation. Refill with clean oil to the oil level mark. Dirty operating conditions require more frequent changes. Under extreme conditions, oil should be changed hourly.

WARNING

Exhaust gases contain carbon monoxide which is odorless and a deadly poison. Proper care must be taken to provide efficient ventilation when running an engine indoors.

Do not fill the gasoline tank while the engine is running. Avoid spilling gasoline on a hot engine – this may cause an explosion and serious injury.

CAUTION! Fill the crankcase and air cleaner with proper oil before starting engine. See that oil level is maintained.

MODEL DATA

Briggs & Stratton has used three different methods of identifying engines.

The first system (Alpha) used a letter or letters and numbers such as A, B, Z, ZZ etc. Some early Letter Models had the letter or letters stamped directly on the cylinder block or flywheel.

The second system (Numeric-Alpha) used a number or numbers such as 5, 14, 23, etc.

Engines having special features are identified by an additional letter or numerals affixed to the basic model letter or number such as AP, AR-6, 14FB, etc. For example: Model AR-6 is a model A engine with a 6-to-1 gear reduction, 6H is a horizontal cylinder Model 6.

The third system (All Numeric) uses 5 or 6 digit numbers to identify engines and is described in Table No. 2. This will be found stamped on the metal name plate or the blower housing.

All engines had either serial numbers or date code numbers which are used in illustrated parts lists when parts change.

Use the same parts and method of repair as for the basic model, except where special instructions or parts are mentioned. The following lists explain the letter symbols used:

EXPLANATION OF LETTERS FOLLOWING BASIC MODEL *LETTERS:*

G–Generator
H–High Speed
L–Aluminum
M–Marine Conversion
P–Direct Crankcase Mounting
R–Reduction Gear
S–Suction Carburetor
T–Marine Transmission

EXPLANATION OF LETTERS FOLLOWING BASIC MODEL *NUMBER:*

B–Ball Bearing
C–Automatic Choke
D–Power Takeoff Revolves Clockwise
F–Flange Mounting
H–Horizontal Cylinder
P–Fuel Pump
R–Reduction Gear
S–Suction Carburetor

Table No. 1
COMPLETE LIST OF BASIC AND SPECIAL CAST IRON MODELS

Basic Model	Corresponding Special Models
A	AGR–4, AH, AHL, AHLP, AHP, AHM, AHMT, AHR–4, AHR–6, AL, ALP, ALR–4, ALR–6, AP, AM, AMT, AR–4, AR–6
B	BH, BHL, BHLP, BHP, BHM, BHR–4, BHR–6, BHLR–4, BHLR–6, BL, BLP, BLR–4, BLR–6, BM, BMG, BP, BR–4, BR–6
D	Motor Wheel, service same as Basic Model P
F	FB, FC
FE	
FG	
FH	FHI
FI	
FJ	FJ–1, FJ–2

MODEL DATA (Cont'd.)

Table No. 1
COMPLETE LIST OF BASIC AND SPECIAL CAST IRON MODELS (CONT'D.)

Basic Model	Corresponding Special Models
H	HM
I	IB, IBHP, IBLP, IBP,IL, ILR-6, IMT, IP, IR-6, IS, IPR1.6, IPR6
K	KL, KLP, KLR-4, KLR-6,KM, KP, KR-4, KR-6
L	LA
M	MB, MC, MF, MH
N	NP, NR-2, NR-6, NPR1.6, NPR6
NS	NSPR1.6, NSPR6
P	PB
Q	
R	RC
S	SC (similar to T)
T	TA
U	UR-2, UR-6
W	WA
WI	WIBP, WR-6, WIPR1.6, WIPR6
WM	WMG
WMB	WBG
WMI	WMIP
Y	
Z	ZH, ZHL, ZHLP, ZHP, ZHLR-4, ZHLR-6, ZHM, ZHR-4, ZHR-6, ZL, ZLP, ZLR-4, ZLR-6, ZM, ZP, ZR-4, ZR-6
ZZ	ZZL, ZZLP, ZZP, ZZR
5	5S
6	6H, 6HF, 6HFB, 6HS, 6HSF, 6S
8	8FB, 8HF, 8R4D, 8R6
9	9B, 9FB, 9FBC, 9FBP, 9P, 9R6, 9R6D
14	14B, 14F, 14FB, 14FBC, 14FBPC, 14FBP, 14P, 14R6, 14R6D
23	23B, 23FB, 23FBP, 23FBPC, 23P, 23PC, 23R6, 23R6D

MODEL	TYPE	CODE
92902	1234-01	90012201

This chart explains how to read Briggs & Stratton's numerical model designation system. It makes it possible to determine the more important mechanical features of the engine by knowing the model number.

I. The first one or two digits indicate the approximate CUBIC INCH DISPLACEMENT.

II. The first digit after the displacement indicates the BASIC DESIGN SERIES, relating to cylinder construction, ignition, or other major differences.

III. The second digit after the displacement indicates POSITION OF CRANKSHAFT, TYPE OF CARBURETOR, and sometimes GOVERNOR.

IV. The third digit after the displacement indicates TYPE OF BEARING and whether or not the engine is equipped with REDUCTION GEARS, AUXILIARY PTO, or PRESSURE LUBRICATION.

V. The last digit indicates the TYPE STARTER or CHARGING SYSTEM.

Table No. 2 BRIGGS & STRATTON MODEL NUMBER SYSTEM

"A" CUBIC INCH DISPLACEMENT	"B" FIRST DIGIT AFTER DISPLACEMENT BASIC DESIGN SERIES	"C" SECOND DIGIT AFTER DISPLACEMENT CRANKSHAFT CARBURETOR GOVERNOR	"D" THIRD DIGIT AFTER DISPLACEMENT BEARINGS REDUCTION GEARS & AUXILIARY PTO	"E" FOURTH DIGIT AFTER DISPLACEMENT TYPE OF STARTER or CHARGING SYSTEM
6	0	0–Horizontal Crankshaft Diaphragm Carburetor	0–Plain Bearing	0–Without Starter
8	1			
9	2	1–Horizontal Crankshaft Vacu–Jet Carburetor	1–Flange Mounting Plain Bearing	1–Rope Starter
10	3			
14	4	2–Horizontal Crankshaft Pulsa–Jet Carburetor Pneumatic Governor	2–Replaceable Bearing	2–Rewind Starter
17	5			
19	6			
17	7	3–Horizontal Crankshaft Flo–Jet Carburetor Mechanical Governor	3–Flange Mounting Ball Bearing	3–120 volt Electric Starter
19	8			
20	9			
23		4–Horizontal Crankshaft Flo–Jet Carburetor	4–Horizontal Crankshaft Pressure Lube	4–12 volt Belt Drive Electric Starter–Generator
		5–Vertical Crankshaft Vacu–Jet Carburetor	5–Gear Reduction (6 to1)	5–Gear Drive Electric Starter only
		6–Vertical Crankshaft Sono–Duct Vacu–Jet	6–Gear Reduction (6 to1) Reverse Rotation	6–Alternator Only*
		7–Vertical Crankshaft Flo–Jet Carburetor	7–Vertical Crankshaft Pressure Lube	7–12 Volt Gear Drive Electric Starter with Alternator
		8–Vertical Crankshaft Sono–Duct Pulsa–Jet	8–Auxiliary PTO Perpendicular to Crankshaft	8–Vertical Pull Starter
		9–Vertical Crankshaft Pulsa–Jet Carburetor	9–Auxiliary PTO Parallel to Crankshaft	9–
				*Digit 6 formerly used for "Wind-up" Starter on 60000, 80000 and 92000 Series

Example **MODEL 92902**

9	2	9	0	2
9 Cubic Inch	Design Series 2	Vertical Crankshaft Pulsa-Jet Carburetor	Plain Bearing	Rewind Starter

TYPE 1234-01, The type number identifies the engines mechanical parts, color of paint, decals, Governed Speed, and Original Equipment Manufacturer.

CODE 90012201, The code is the manufacturing date and is read as follows:

YEAR	MONTH	DAY	ASSEMBLY LINE AND MANUFACTURING PLANT
90	01	22	01

Table No. 3
OVERHAUL AND TUNE-UP PROCEDURE

We recommend that the following procedure be followed in overhauling all Briggs & Stratton engines. It is possible, of course, that these operations be performed in different sequence, but we believe that performing the steps in the same order every time increases efficiency. All steps may not be necessary on every engine. The condition of the engine will determine what should be done. However, the steps listed in the Tune-up (see page 8) should be performed in every case. The operations listed apply to models indicated by an "X."

The words "remove and inspect" or "reassemble," should be understood in each step unless another operation such as "check," "test," or "adjust" is indicated.		MODEL						
DISASSEMBLY		**N 8**	**9 14 23**	**ZZ**	**B**	**5 6**	**NS WI**	**A**
1	Air Cleaner	X	X	X	X	X	X	X
2	Muffler (Remove only when necessary.)	X	X	X	X	X	X	X
3	Fuel Pipe	X	X	X	X		X	X
4	Fuel filter yoke-bowl-gasket-screen only	X	X	X	X			X
5	Tank outlet assembly						X	
6	Air cleaner elbow or pipe	X	X	X	X			X
7	Carburetor and linkage	X	X	X	X	X	X	X
8	Check space between upper and lower bodies Check throttle shaft and bushing for wear	X	X	X	X			X
9	Disassemble carburetor	X	X	X	X			X
10	Spin flywheel to check compression	X	X	X	X	X	X	X
11	Spark plug. adjust gap, clean, test gap .025"	X	X	X	X	X	X	X
12	Carburetor intake elbow	X	X	X	X			X
13	Fuel Tank (Remove from tank bracket only when tank is to be replaced.)	X	X	X	X	X	X	X
14	Rope starter pulley		X	X	X			X
15	Blower housing	X	X	X	X	X	X	X
16	Check air gap, armature to flywheel	X				X	X	
17	Valve cover	X	X	X	X	X	X	X
18	Breather (Cover, strainer and moss only on 9 –14 – 23 – A – B – ZZ)	X	X	X	X	X	X	X
19	Cylinder head and shield	X	X	X	X	X	X	X
20	Check tappet clearance	X	X	X	X	X	X	X
21	Rope starter pulley	X				X	X	
22	Flywheel	X	X	X	X	X	X	X
23	Breaker point cover	X	X	X	X	X	X	X
24	Check breaker point gap (Gap .020"). (For replacement of points, see steps 67 & 73.)	X	X	X	X	X	X	X
25	Check breaker point plunger hole.	X		X	X	X	X	X
26	Breaker box		X					
27	Drain oil	X	X	X	X	X	X	X
28	Base	X	X	X	X	X	X	X
29	Mechanical governor parts	X	X	X	X			X
30	Connecting rod and piston from engine	X	X	X	X	X	X	X
31	Check end play	X	X	X	X	X	X	X

Table No. 3
OVERHAUL AND TUNE-UP PROCEDURE, CONT'D

The words "remove and inspect" or "reassemble" should be understood in each step unless another operation such as "check," "test" or "adjust" is indicated.		MODEL						
		N 8	9 14 23	ZZ	B	5 6	NS WI	A
32	Test condenser (To replace see step 66 or 72.)	X	X	X	X	X	X	X
33	Rotor		X					
34	Test coil (To replace see step 75.)		X					
35	Test armature (To replace see step 75.)	X		X	X	X	X	X
36	Coil and armature assembly		X					
37	Back plate		X	X	X			
38	Replace governor blade (To replace see step 65.)	X				X	X	
39	Magneto (Check bearing with plug gauge.)	X		X	X	X	X	X
40	Bearing support (First remove burr at set screw hole and keyway on 9 – 14 – 23. Check bearing with plug gauge.)		X					
41	Crankcase cover		X	X	X			
42	*Crankshaft	X	X	X	X	X	X	X
43	Check crankshaft (Crankpin, journals, power take-off)	X	X	X	X	X	X	X
44	Valves and springs	X	X	X	X	X	X	X
45	Cam shaft and gear	X	X	X	X	X	X	X
46	Check automatic spark advance		X					
47	Tappets	X	X	X	X	X	X	X
48	Cylinder (Check bore, bearing, valve guides and seats)	X	X	X	X	X	X	X
49	Cylinder from crankcase			X				
50	Disassemble connecting rod and piston	X	X	X	X	X	X	X
51	Check piston, rings, connecting rod, piston pin	X	X	X	X	X	X	X
REPAIRS								
52	Clean parts	X	X	X	X	X	X	X
CYLINDER								
53	Hone cylinder bore to next oversize	X	X	X	X	X	X	X
54	Replace valve guide (intake or exhaust)	X	X	X	X	X	X	X
55	Install valve guide (intake or exhaust)	X				X	X	
56	Reface valve and seat and lap. (One only, intake or exhaust – double for both)	X	X	X	X	X	X	X
57	Replace exhaust valve seat insert	X	X	X	X	X	X	X
58	Install intake valve seat insert	X	X	X	X	X	X	X
59	Replace cylinder bushing	X			X	X	X	X
60	Replace oil seal	X	X	X	X	X	X	X
61	Replace breather body		X	X	X			X
MAGNETO								
62	Replace magneto bushing and oil seal	X		X	X	X	X	X
63	Install breaker point plunger bushing	X		X	X	X	X	X
64	Replace armature and governor blade	X		X	X	X	X	X
65	Replace governor blade	X				X	X	
66	Replace condenser	X		X	X	X	X	X
67	Replace breaker points	X		X	X	X	X	X
68	Replace ignition cable	X		X	X	X	X	X

Table No. 3
OVERHAUL AND TUNE-UP PROCEDURE, CONT'D

The words "remove and inspect" or "reassemble," should be understood in each step unless another operation such as "check," "test," or "adjust" is indicated.		MODEL						
		N 8	9 14 23	ZZ	B	5 6	NS WI	A
CARBURETOR								
69	Replace throttle shaft bushings	X	X	X	X			X
70	Reassemble carburetor	X	X	X	X			X
BREAKER BOX								
71	Replace breaker shaft		X					
72	Replace condenser		X					
73	Replace breaker points							
74	Replace primary lead wire		X					
* On Models AP – I, NP, 8FB remove cam shaft and push cam gear into cylinder pocket before removing crankshaft								
COIL AND ARMATURE ASSEMBLY								
75	Replace coil or armature or both		X					
CAM GEAR								
76	Replace automatic spark advance weight and spring		X					
REASSEMBLY								
Reassemble the parts and proper adjustment in the following sequence:								
77	Cylinder to crankcase			X				
78	Tappets	X	X	X	X	X	X	X
79	*Cam gear, camshaft and plug	X	X	X	X	X	X	X
80	Crankshaft and bearing support or magneto with breaker plunger	X	X	X	X	X	X	X
81	Crankcase cover		X	X	X			
82	Adjust end play with gaskets	X	X	X	X	X	X	X
83	Breaker box assembly		X					
84	Breaker point gap (Clean and adjust.)	X	X	X	X	X	X	X
85	Piston, piston pin, connecting rod (Align)	X	X	X	X	X	X	X
86	Rings	X	X	X	X	X	X	X
87	Install piston and connecting rod in cylinder and spin crankshaft	X	X	X	X	X	X	X
88	Mechanical governor parts	X	X	X	X			X
89	Base		X	X	X			X
90	Base with 2 mounting screws	X				X	X	
91	Base with 8 mounting screws	X					X	
92	Rotor		X					
93	Back plate		X	X	X			
94	Coil and armature assembly		X					
95	Check rotor timing		X					
96	Adjust rotor timing		X					
97	Breaker point cover	X	X	X	X	X	X	X
98	Flywheel	X	X	X	X	X	X	X
99	Rope starter pulley	X				X	X	
100	Adjust armature to flywheel air gap	X				X	X	
101	Check spark	X	X	X	X	X	X	X
102	Adjust valve tappet clearance	X	X	X	X	X	X	X

Table No. 3
OVERHAUL AND TUNE-UP PROCEDURE, CONT'D

The words "remove and inspect" or "reassemble," should be understood in each step unless another operation such as "check," "test," or "adjust" is indicated.		MODEL						
		N 8	9 14 23	ZZ	B	5 6	NS WI	A
103	Valves, springs, retainers (Recheck tappet clearance.)	X	X	X	X	X	X	X
104	Intake elbow	X	X	X	X			X
105	Cylinder head, cylinder shield, cylinder head cover	X	X	X	X	X	X	X
106	Recheck spark plug gap. Assemble plug with graphite grease. Check compression.	X	X	X	X	X	X	X
107	Breather	X	X	X	X	X	X	X
108	Valve cover	X	X	X	X	X	X	X
109	Carburetor and linkage	X	X	X	X	X	X	X
110	Pneumatic governor (Check and align.)	X				X	X	
111	Mechanical governor (Check and adjust.)		X	X	X			X
* On models AP – I – NP – 8FB the crankshaft must be installed before camshaft.								
112	Blower housing	X	X	X	X	X	X	X
113	Rope starter pulley		X	X	X			X
114	Fuel tank	X	X	X	X	X	X	X
115	Fuel filter parts, screen, gasket, bowl, yoke	X	X	X	X			X
116	Outlet assembly						X	
117	Fuel pipe	X	X	X	X		X	X
118	Air cleaner elbow or pipe	X	X	X	X			X
119	Muffler	X	X	X	X	X	X	X
120	Fill crankcase with oil	X	X	X	X	X	X	X
121	Spray engine and assemble decals	X	X	X	X	X	X	X
122	Start engine	X	X	X	X	X	X	X
123	Check spark	X	X	X	X	X	X	X
124	Retighten cylinder head screws	X	X	X	X	X	X	X
125	Adjust carburetor	X	X	X	X	X	X	X
126	Set governor to correct engine speed	X	X	X	X	X	X	X
127	Clean, fill, assemble air cleaner	X	X	X	X	X	X	X

TUNE-UP PROCEDURE

The Tune-up consists only of the fifteen steps listed below which includes no repairs. These steps apply to all models (except Step #2 which applies to Models N – 8 – 9 – 14 – 23 only – Step #3 to Models NS – WI – WMB – 5S – 6S only and Step #6 to N – NS – WI – WMB – 5S – 6S – 8 only).

1. Inspect air cleaner.
2. Clean fuel pipe, fuel filter and tank on gravity feed system.
3. Clean fuel pipe, outlet assembly and tank on suction feed system.
4. Rock flywheel to check compression.
5. Test spark plug, clean and regap.
6. Check and adjust governor blade.
7. Inspect breaker points and adjust to .020"
8. Inspect condenser and breaker point connections.
9. Reassemble parts except air cleaner.
10. Fill crankcase with oil.
11. Start engine.
12. Check spark with tester No. 19368 while engine is running.
13. Adjust carburetor.
14. Set governor to correct engine speed.
15. Clean, refill and reassemble air cleaner.

Table No. 4
TUNE-UP DATA

ENGINE MODEL	SPARK PLUG		VALVE CLEARANCE				CARBURETOR ADJUSTMENT	
	CHAMPION	AUTO-LITE	INTAKE		EXHAUST		TURNS OPEN	
			MAX.	MIN.	MAX.	MIN.	IDLE VALVE	NEEDLE VALVE
A (5 Digit)	8 com*	B7*	.007	.005	.009	.007	1/2 to 3/4	1 to 1-1/4
A (6 Digit)	8 com*	B7*	.009	.007	.011	.009	1/2 to 3/4	1 to 1-1/4
A (TPA Ex Valve)	8 com*	B7*	.009	.007	.016	.014	1/2 to 3/4	1 to 1-1/4
B (5 Digit)	8 com*	B7*	.007	.005	.009	.007	1/2 to 3/4	1 to 1-1/2
B (6 Digit)	8 com*	B7*	.009	.007	.011	.009	1/2 to 3/4	1 to 1-1/2
B (TPA Ex Valve)	8 com*	B7*	.009	.007	.016	.014	1/2 to 3/4	1 to 1-1/2
F to FH except FG & FI	8 com*	B7*	None	None	.013	.011	None	1 to 1-1/2
FG & FI	8 com*	B7*	.007	.005	.007	.005	None	3/4 to 1
FJ-1 & FJ-2	8 com*	B7*	.001	.009	.021	.019	None	1 to 1-1/4
H	8 com*	B7*	.011	.009	.021	.019	None	1 to 1-1/4
I, IBP	J8	A7F	.009	.007	.016	.014	1/2 to 3/4	1 to 1-1/4
K	8 com*	B7*	.007	.005	.015	.013	1/2 to 3/4	1 to 1-1/4
L	8 com*	B7*	.011	.009	.021	.019	None	1 to 1-1/2
M	8 com*	B7*	.007	.005	.009	.007	None	1 to 1-1/4
MB – MF	8 com*	B7*	.007	.005	.009	.007	1/2 to 3/4	1 to 1-1/4
N	J8	A7F	.009	.007	.016	.014	1/2 to 3/4	1 to 1-1/4
NS	J8	A7F	.009	.007	.016	.014	None	1 to 1-1/2
P, PB	8 com*	B7*	None	None	.021	.019	None	3/4 to 1
Q	8 com*	B7*	.007	.005	.009	.007	None	3/4 to 1
R	8 com*	B7*	.007	.005	.009	.007	1/2 to 3/4	1 to 1-1/4
S	8 com*	B7*	.007	.005	.009	.007	None	1 to 1-1/2
T	8 com*	B7*	.007	.005	.009	.007	None	1 to 1-1/4
U	J8	A7F	.007	.005	.016	.014	None	1-1/4 to 1-1/2
W	8 com*	B7*	.007	.005	.009	.007	1/2 to 3/4	1 to 1-1/4
WI	J8	A7F	.007	.005	.016	.014	None	1 to 1-1/4
WM	J8	A7F	.007	.005	.016	.014	None	1 to 1-1/4
WMB	J8	A7F	.007	.005	.016	.014	None	1 to 1-1/4
WMI	J8	A7F	.007	.005	.016	.014	None	1 to 1-1/4
Y	8 com*	B7*	.011	.009	.021	.019	None	1 to 1-1/2
Z	8 com*	B7*	.009	.007	.016	.014	1/2 to 3/4	1 to 1-1/4
ZZ	8 com*	B7*	.021	.019	.019	.017	1/2 to 3/4	1 to 1-1/2
ZZ (TPA Ex Valve)	8 com*	B7*	.021	.019	.019	.017	1/2 to 3/4	1 to 1-1/2
5	J8	A7F	.009	.007	.016	.014	1/2 to 3/4	1 to 1-1/4
5S	J8	A7F	.009	.007	.016	.014	None	1 to 1-1/2
6, 6A–H, 6A–HS, 6F, 6FB, 6FBC, 6FBP, 6R4D, 6R–6	J8	A7F	.009	.007	.016	.014	1/2 to 3/4	1 to 1-1/4

Table No. 4
TUNE-UP DATA, CONT'D

ENGINE MODEL	SPARK PLUG		VALVE CLEARANCE				CARBURETOR ADJUSTMENT	
	CHAMPION	AUTO-LITE	INTAKE		EXHAUST		TURNS OPEN	
			MAX.	MIN.	MAX.	MIN.	IDLE VALVE	NEEDLE VALVE
6S, 6-SFB, 6HS, 6HSF, 6-SR6	J8	A7F	.009	.007	.016	.014	None	1 to 1-1/2
6H, 6HF, 6HFB, 6HS, 6HSF	J8	A7F	.009	.007	.016	.014	1/2 to 3/4	1 to 1-1/4
8, 8A-HF, 8H, 8HF	J8	A7F	.009	.007	.016	.014	1/2 to 3/4	1 to 1-1/4
9	J8	A7F	.009	.007	.016	.014	1/2 to 3/4	1 to 1-1/4
9 (TPA Ex Valve)	J8	A7F	.009	.007	.019	.017	1/2 to 3/4	1 to 1-1/4
14	J8	A7F	.009	.007	.016	.014	1/2 to 3/4	1 to 1-1/2
14 (TPA Ex Valve)	J8	A7F	.009	.007	.019	.017	1/2 to 3/4	1 to 1-1/2
19	J8	A7F	.009	.007	.016	.014	1/2 to 3/4	1 to 1-1/2
19D	J8	A7F	.009	.007	.019	.017	1/2 to 3/4	1 to 1-1/2
23	J8	A7F	.009	.007	.019	.017	1/2 to 3/4	1 to 1-1/2
23 (TPA Ex Valve)	J8	A7F	.009	.007	.023	.021	1/2 to 3/4	1 to 1-1/2
23A	J8	A7F	.009	.007	.019	.017	1/2 to 3/4	1 to 1-1/2
23C	J8	A7F	.009	.007	.019	.017	1/2 to 3/4	1 to 1-1/2
23D	J8	A7F	.009	.007	.019	.017	1/2 to 3/4	1 to 1-1/2

Before setting the engine speed, see if the type number is listed in this table. If type number is listed, set engine speed at RPM indicated. If type number is not listed see Table 5 for standard speed setting. These speeds allow for a drop in RPM when the load is applied.

Table No. 5
ENGINE SPEED SETTINGS FOR SPECIAL TYPE NUMBERS

Type #	RPM	Type #	RPM	Type #	RPM	Type #	RPM	Type #	RPM	Type #	RPM
20005	2050	20861	2100	25612	2300	95303	2225	96910	3300	202522	3200
20015	2125	20868	3400	25613	2000	95305	2600	96911	2400	202523	3200
20018	2700	20870	4200	25614	2000	95306	2500	96914	2500	202524	2600
20025	1950	20885	4200	25622	2200	95311	1700	96934	3300	202526	2600
20058	1925	20910	2900	25623	2200	95323	2600	96940	2700	202527	1900
20080	2000	20914	3400	25627	2200	95403	2225	96941	2920	202529	2000
20081	2200	20933	2150	25629	2200	95430	2200	96945	3300	202544	2000
20082	2000	25030	4000	25634	2200	95461	2500	96946	2700	202549	1800
20103	2225	25046	4000	25649	2400	95462	2500	201014	2200	202553	1800
20153	2225	25048	2500	25859	2075	95467	2100	201017	2200	203035	2000
20286	2225	25177	3000	60150	2200	95475	2300	201019	2700	203040	2450
20350	2600	25226	3050	60315	2700	95480	2600	201024	3300	203041	1850
20351	2225	25256	3200	60321	2000	95486	2225	201025	2200	203043	2600
20369	1925	25282	3800	60595	3300	95488	2225	201027	2100	203314	3000
20375	1950	25300	3800	60654	2000	95526	2600	201036	2200	203518	2000
20379	2225	25305	2640	60656	1925	95528	2600	201043	2750	203521	2000
20381	1900	25306	2880	60676	1950	95561	2600	201516	1800	203527	3200
20387	2000	25314	2700	60711	2000	95566	2450	201520	2000	203528	2000
20410	2500	25381	2000	60825	3200	95581	2225	201526	2000	203534	3200
20423	1925	25421	2000	60881	2000	95583	2225	202012	2500	203535	3200
20424	2000	25429	2200	60906	1925	95608	1900	202013	2500	203536	3400
20425	2000	25453	2200	60940	1925	95834	2500	202014	2300	203541	2600

Table No. 5
ENGINE SPEED SETTINGS FOR SPECIAL TYPE NUMBERS, CONT'D

Type #	RPM	Type #	RPM	Type #	RPM	Type #	RPM	Type #	RPM	Type #	RPM
20484	2000	25457	2200	60975	2200	95853	2920	202015	2900	204089	2500
20515	2600	25458	2200	95011	3600	95910	2400	202016	2000	205063	3800
20795	2200	25459	2000	95065	2125	95919	2400	202022	2700	205070	3700
20797	2000	25460	2200	95090	2000	95925	1600	202024	2450	205085	3200
20810	1850	25461	2000	95158	3500	95938	2500	202025	2000	205091	3700
20811	2300	25463	2200	95170	3000	95939	2300	202029	2700	205099	3200
20813	2300	25465	2000	95172	1900	9946	2500	202034	2000	205113	2400
20814	2300	25567	2000	95204	2000	9965	2700	202035	2400	205114	3200
20815	2000	25604	2200	95208	2225	95965	2700	202037	1900	205128	3200
20818	2200	25605	2200	95261	3000	95967	3300	202040	1800	205141	4500
20819	2000	25606	1850	95285	2000	95970	3300	202054	2400	205142	3700
20820	1950	25607	2000	95293	2000	95971	2700	202312	3000	205186	3400
20849	1950	25608	2200	95294	2000	95975	3300	202514	2000	205270	2630
20860	2100	25609	2000	95302	2600	95981	2700	202517	1850	205274	2640
203035	200	205557	2400	*205776	4600	206382	3700	208148	1900	208324	2600
203040	2450	205562	2900	205777	1900	206383	3000	208151	2000	208605	2600
203041	1850	205563	2250	205778	4600	206386	3000	208151	2000	208609	2600
203043	2600	295564	3500	205779	4600	206464	2500	208157	2000	300065	2000
203314	3000	205567	3200	205782	2700	207010	3200	208157	2000	300085	2000
203518	2000	205571	2800	205786	2800	207012	3800	208159	2000	300096	3000
203521	2000	205577	2000	*205789	4600	207015	3000	208160	2200	300099	2000
203527	3200	205579	2000	206100	3300	206016	3000	208167	3000	300108	2000
203528	2000	205581	2000	206101	2700	207022	3450	208172	2400	300119	1925
203534	3200	205582	2640	206102	2700	207023	3000	208176	3200	300138	2000
203535	3200	205589	2640	206103	2700	207024	3000	208177	2400	300140	2200
203536	3400	205591	2300	206104	2700	207106	3000	208179	2600	300145	2300
203541	2600	205592	2500	206105	2700	207110	2800	208180	2000	300149	2400
204089	2500	2205593	2800	206106	2700	207119	2900	208182	1950	300150	2300
205063	3800	205599	2800	206158	3500	208055	2200	208183	3000	300155	2000
205070	3700	205600	3200	206160	3000	208057	2000	208185	4000	300176	2000
205085	3200	205605	1850	207174	2900	208058	2200	208187	3300	300177	2000
205091	3700	205608	2600	206180	3500	208059	2200	208188	2200	300181	2500
205099	3200	205610	2640	206304	3800	208064	2200	208189	2200	300183	1925
205113	2400	205624	2300	206327	3200	208065	2200	208190	2000	300185	3100
205114	3200	205626	2900	206340	3200	208066	2200	208199	2000	300188	2000
205128	3200	205627	2640	206341	3000	208068	2100	208203	2700	300193	2000
205141	4500	205631	3600	206351	3300	208069	2200	208206	2200	300194	2600
205142	3700	205635	2300	206352	4200	208070	2200	208254	2200	300199	2500
205186	3400	205644	2640	206359	4200	208071	2000	208256	2400	300201	2500
205270	2630	207010	3200	206360	4200	208072	4000	208264	3100	300203	2500
205274	2640	205657	2800	206361	3000	208077	2200	208272	2000	300205	2000
205279	3500	205659	2450	206362	3800	208080	2200	208273	2000	300207	2000
205288	3450	205663	2000	206363	3000	208082	2000	208277	2000	300208	2500
205305	2900	205675	2300	206364	3000	208084	2200	208278	2000	300209	2500
205318	3200	205676	2300	206367	3500	208108	2900	208284	2000	300210	2500
205505	2800	205678	2640	206371	3000	208114	2100	208285	4000	300211	2500
205507	3050	205678	2640	206372	3600	208116	2000	208289	1925	300213	2200
205521	3200	205683	2000	206373	3600	208117	2000	208291	1925	300214	2500
205530	3800	205754	2500	206375	2900	208118	2400	208307	2250	300215	2500

Table No. 5
ENGINE SPEED SETTINGS FOR SPECIAL TYPE NUMBERS, CONT'D

Type #	RPM	Type #	RPM	Type #	RPM	Type #	RPM	Type #	RPM	Type #	RPM
205534	3100	205755	3800	206376	2900	208129	1900	208312	2400	300216	2000
205537	3100	205772	2860	206378	2000	208130	1900	208313	2300	300217	2000
300218	1800	300324	2900	300582	2250	302108	2000	304212	2000	304566	2000
300219	2500	300328	1900	300583	2600	302113	1950	304214	2400	304572	2500
300220	2000	300328	1900	300593	3600	302127	2000	304215	2000	304576	2500
300223	2000	300329	3000	300597	3000	302136	2200	304216	1900	304578	2000
300224	1900	300335	3000	399600	2500	302138	2000	304220	2400	304580	2400
300225	1800	300337	3000	300606	1900	302142	2500	304225	2400	304584	2000
300226	2500	300342	3600	300608	2500	304054	2000	304226	3000	304585	3000
300227	2500	300342	2400	300610	1900	304089	2400	304227	2400	304591	2000
300228	2500	300348	2400	300615	2600	301106	2700	304228	2400	304596	2300
300229	1900	300349	1950	300628	2000	304114	2880	304234	2400	304597	2300
300239	2000	300362	2000	300725	2600	304124	2200	304236	2400	304598	3200
300246	3000	300376	2400	300734	2500	304131	2000	304237	3100	304602	2000
300248	2500	300385	2000	300736	2500	304132	2000	304238	2600	304604	2000
300249	2500	300410	2000	300749	2600	304134	2000	304239	2500	304606	2600
300250	2500	300411	2250	300753	2500	304135	2000	304241	2700	304606	2500
300251	2000	300414	2500	300755	2500	304146	2000	304242	2500	304607	2500
300253	2500	300420	2000	300756	2500	304147	2000	304246	2500	304614	2500
300253	2500	300503	2000	300801	2500	304151	2100	305251	2400	304621	2400
300254	*415	300504	1900	300802	1900	304160	2300	304252	2200	304646	2000
300259	2500	300506	2400	300804	2500	304186	2000	304260	2000	304647	2300
300265	2500	300507	3000	300807	1900	304192	2400	304263	2000	304648	2000
300266	2300	300517	1950	300879	3000	30493	2400	304271	2400	304653	2400
300275	3000	300520	2475	301117	3000	304194	2000	304272	2000	304691	2400
300280	3000	300572	2500	301139	2900	304195	2400	304273	2000	304698	2500
300282	2300	300531	3600	301146	2400	301196	2400	304274	2000	304704	2000
300285	2500	300534	2000	301149	3300	304197	2400	304283	2000	304780	2400
300287	2400	300547	2400	301152	2400	304199	2400	304285	2600	304801	2000
300292	2700	300550	3000	301155	2000	304200	2000	304287	2400	304872	2300
300292	2700	300551	2000	301168	2900	304202	2400	304289	2400	304873	2400
300296	3000	300554	2000	301305	3300	304203	2300	304298	2000	304876	1950
300297	3000	300559	2400	301307	2400	304204	2000	304299	2400	305101	2300
300300	2700	300562	2400	301312	2900	304205	2400	304303	2000	305110	2400
300302	2900	300564	2250	301318	2400	304207	2400	304304	2000	305112	2300
300303	1800	300566	1950	302083	2300	304208	2000	304310	2500	305116	2740
300307	2000	300570	2200	302087	2150	304209	2400	304311	2500	305119	2800
300312	3800	300570	2200	302104	2640	304210	2400	304312	2974	305129	2700
300314	2880	300578	2400	302107	2000	304211	2400	304332	1950	305133	3300
305311	2400	306187	2300	306522	2000	306657	3850	308180	2500	308754	3200
305312	2400	306198	2400	306523	3600	306658	2600	308211	2400	308759	2000
306109	2700	306210	3800	306525	3800	306661	3950	308217	3000	308769	2600
306110	3200	306219	3200	306529	4600	306663	3800	308227	3000	308779	3200
306111	2600	306566	2000	306536	3800	*306702	4600	308512	2000	308790	2300
306112	3000	306234	2000	306547	2700	306703	4600	308513	3000	308904	2200
306113	2900	306236	2500	306548	4600	**306704	4600	308513	3000	308906	3200
306119	2900	306247	1900	306549	3000	*306705	4600	308513	3000	700039	3300
306121	2000	306252	2400	306555	3000	*306707	4600	308513	3000	700043	3000
306123	3200	306255	2880	306556	3000	**306708	4600	308522	2000	700045	2300

Table No. 5
ENGINE SPEED SETTINGS FOR SPECIAL TYPE NUMBERS, CONT'D

Type #	RPM	Type #	RPM	Type #	RPM	Type #	RPM	Type #	RPM	Type #	RPM
306126	2860	306303	2400	306557	3600	*306709	4600	308528	2000	700046	2800
306127	2750	306304	3100	306561	3600	306713	4600	308530	3200	700052	2900
306128	3700	306305	2300	306562	3600	306714	4600	308523	3000	701023	2800
306131	2800	306312	2300	306583	2600	306715	4600	308539	2000	701029	2300
306135	3000	306314	2300	306593	3800	306717	4600	308540	3200	701053	2800
306150	2400	306315	2300	306597	3000	306718	4600	308548	2400	701058	2400
306152	2080	306317	2300	306598	3600	306719	4600	308563	2000	702037	2500
*306153	4600	306324	3500	306604	3600	306722	4600	308564	2300	702058	2750
306155	3200	306325	2300	306606	3600	307007	2800	308576	2600	702518	3600
306157	3000	306326	2300	306619	3600	307010	2500	308578	2700	702526	3600
306168	3700	306327	2300	306620	3000	307013	2500	308581	2000	702528	2600
306169	2500	306330	2300	306634	2600	308105	2300	308583	3200	702530	2600
306170	2850	306409	2850	306635	3800	308130	2400	308584	2000		
306173	3700	306514	2300	306638	3000	308135	2400	308589	3200		
306179	2000	306515	3500	306645	2600	308145	2800	308597	2200		
306184	3050	306516	3600	306650	2600	308154	2500	308753	2600		
306186	2600	306517	3600	306654	3850	308161	2400	308754	2300		

* Place lower end of throttle link in outer hole in governor lever. Place governor spring in number 6 hole in governor lever.

= Place governor spring in number 2 hole in governor lever.

** Place governor spring in number 6 hole in governor lever. Otherwise standard.

t Serial numbers 19188 to 19191, 19193 to 19213, 19215 to 19227. Set at 2900 RPM.

Table No. 6
SPEED SETTING FOR STANDARD ENGINES

MODEL	5 DIGIT TYPE NUMBERS			SEE FIG. #, Chapter 3	6 DIGIT TYPE NUMBERS			SEE FIG. #, Chapter 3
	OPERATING SPEED RANGE R.P.M.	STANDARD SPEED SETTING NO-LOAD	IDLE SPEED NO-LOAD		OPERATING SPEED RANGE R.P.M.	STANDARD SPEED SETTING NO-LOAD	IDLE SPEED NO-LOAD	
A	2200-3200	2400	1400	358	2200-3200	2900	1400	359
AGR–4	*2000-2400	*2200	*1400	358				
AH, AHL, AHLP, AHP	2200-3200	2900	1400	358				
AHM, AHMT	2200-3200	2900	1400	358				
AHR–4	*2200-3200	*3000	*1400	358				
AHR–6	*2200-3200	*2900	*1400	358				
AL, ALP, AP	2200-2400	2400	1400	358	2200-3200	2900	1400	359
ALR–4, AR–4	*2000-2400	*2400	*1400	358				
ALR–6, AR–6	*2000-2400	*2400	*1400	358	*2200-3200	*2900	*1400	359
AM, AMT	2000-2400	2400	1400	358				
B, BP	2300-2700	2700	1400	363 to 366	2200-3200	2900	1400	363 to 366
BH, BHL, BHLP, BHP	2200-3200	2900	1400	363 to 366	2200-3200	2900	1400	363 to 366
BHM	2200-3200	2900	1400	363 to 366				
BHLR–4, BHR–4	*3000-3600	*3000	*1400	363 to 366				
BHLR–6, BHR–6	*3000-3600	*2900	*1400	363 to 366				
BL, BLP	2300-2700	2700	1400	363 to 366	2200-3200	2900	1400	363 to 366
BLR–4, BR–4	*2300-2700	*2700	*1400	363 to 366	*2200-3200	*2900	*1400	363 to 366
BLR–6, BR–6	*2300-2700	*2700	*1400	363 to 366	*2200-3200	*2900	*1400	363 to 366
BM BMG	2300-2700	2700	1400	363 to 366	2200-3200	2900	1400	363 to 366
FH	1750-1800	1950	1400	367				

Table No. 6
SPEED SETTING FOR STANDARD ENGINES, CONT'D

MODEL	5 DIGIT TYPE NUMBERS			SEE FIG. #, Chapter 3	6 DIGIT TYPE NUMBERS			SEE FIG. #, Chapter 3
	OPERATING SPEED RANGE R.P.M.	STANDARD SPEED SETTING NO-LOAD	IDLE SPEED NO-LOAD		OPERATING SPEED RANGE R.P.M.	STANDARD SPEED SETTING NO-LOAD	IDLE SPEED NO-LOAD	
FHI	1750-1800	1950	1400	366				
FI	1750-1900	2100	1400	368				
FJ–1	3000-4000	4000	1400	358				
FJ–2	1800-2400	2400	1400	358				
H, HM	1750-2100	1950	1400	369				
I					2600-3600	3300	1750	371, 372, 376, 377, 378
IBHP	2100-3600	3300	1750	370				
IB, IBLP	2600-3600	3100	1750	370				
IBP, IP	2600-3200	3100	1750	370	2600-3200	2900	1750	370
IL					2600-3200	2900	1750	370
ILR–6, IR–6	*2600-3200	*2900	*1750	370	2600-4000	*2900	*1750	370
IMT	2600-3200	3100	1750	370	2600-3200	2900	1750	370
IPR–1.6					*2600-3600	*3300	*1750	370
IPR–6					*2600-3600	*3300	*1750	370
IR–2	*2600-3200	*3100	*1750	370	*2600-3600	*3300	*1750	370
IR–6	*2600-3200	*2900	*1750	370	*2600-3600	*3300	*1750	370
IS					2600-4200	3600	1750	
K, KL,KLP, KP	2300-2700	2700	1400	363 to 366	2300-2700	2700	1400	363 to 366
KLR–4, KR–4	*2300-2700	*2800	1400	363 to 366	*2300-2700	*2800	*1400	363 to 366
KLR–6, KR–6	*2400-2700	*2700	*1400	363 to 366	*2400-2700	*2700	*1400	363 to 366
KM	2300-2700	2700	1400	363 to 366	2300-2700	2700	1400	363 to 366
L, LA	1700-1900	1950	1400	373				
M, MC	1800-2400	2400	1400	358				
MB, MF	1800-2400	2400	1400	374				
MH	3000-4000	3900	1400	358				
N, NP					2600-3600	3300	1750	372, 375 to 379
NPR–1.6					*2600-3600	*3300	*1750	372, 375 to 379
NPR–6					*2600-3900	*3300	*1750	372, 375 to 379
NR–2					*2600-3600	*3300	*1750	372, 375 to 379
NR–6					*2600-4000	*3500	*1750	372, 375 to 379
NS					2200-3200	3300	1750	387
NSPR–1.6					*2200-3200	*3300	*1750	387
P, PB	2100-2300	2400	1400	379				
Q	1700-1900	2000	1400	380				
R, RC	1800-2400	2600	1400	381				
S, SC	1700-1900	2000	1400	382				
T	1700-1900	2000	1400	358				
TA	1700-1900	2000	1400	374				
U					2200-3200	2900	1750	383, 384
UR–2					*2200-3200	*2900	*1750	383, 384
UR–6					*2200-3200	*2900	*1750	383, 384
W, WA	1800-2400	2000	1400	381				
WBG	2300	2500	1750	385, 386	2300	2500	1750	385, 386

Table No. 6
SPEED SETTING FOR STANDARD ENGINES, CONT'D

MODEL	5 DIGIT TYPE NUMBERS			SEE FIG. #, Chapter 3	6 DIGIT TYPE NUMBERS			SEE FIG. #, Chapter 3
	OPERATING SPEED RANGE R.P.M.	STANDARD SPEED SETTING NO-LOAD	IDLE SPEED NO-LOAD		OPERATING SPEED RANGE R.P.M.	STANDARD SPEED SETTING NO-LOAD	IDLE SPEED NO-LOAD	
WI, WIBP	2200-3200	2900	1750	385, 386	2200-3200	2700	1750	387
WIPR–1.6					*2200-3200	*2700	*1750	387
WIPR–6					*2200-3200	*2700	*1750	387
UR–6					*2200-3200	*2900	*1750	383, 384
W, WA	1800-2400	2000	1400	381				
WBG	2300	2500	1750	385, 386	2300	2500	1750	385, 386
WI, WIBP	2200-3200	2900	1750	385, 386	2200-3200	2700	1750	387
WIPR–1.6					*2200-3200	*2700	*1750	387
WIPR–6					*2200-3200	*2700	*1750	387
WM	2250-2800	2250	1750	385, 386				
WMB	2250-2800	2250	1750	385, 386	2200-2800	2250	1750	385, 386
WMG	2300	2500	1750	385, 386				
WMI, WMIP	2100-2500	2500	1750	385, 386				
WR–6	*2200-3200	*2700	*1750	385, 386	*2400-3200	*2700	*1750	385, 386
Y	1700-1900	1950	1400	388				
Z, ZL, ZLP, ZP	2200-2600	2600	1400	363 to 366	2200-3200	2900	1400	363 to 366
ZH, ZHL, ZHLP, ZHP	2200-3200	3100	1400	363 to 366	2200-3200	2900	1400	363 to 366
ZHLR–4, ZHR–4	*2200-3200	*3100	*1400	363 to 366	*2200-3200	*2900	*1400	363 to 366
ZHLR–6, ZHR–6	*2200-3200	*3100	*1400	363 to 366	*2200-3200	*2900	*1400	363 to 366
ZHM	2200-3200	3100	1400					
ZLR–4, ZR–4	*2200-2500	*2600	*1400	363 to 366	*2200-3200	*2900	*1400	363 to 366
ZLR–6, ZR–6	*2200-2600	*2600	*1400	363 to 366	*2200-3200	*2900	*1400	363 to 366
ZM, ZMG	2200-2600	2600	1400	363 to 366	2200-3200	2900	1400	363 to 366
ZZ, ZZL, ZZLP, ZZP					2200-3200	2900	1400	363 to 366
ZZR–6					*2200-3200	*2900	*1400	363 to 366
5					2600-3600	3300	1750	371 to 378
5S					2600-3600	3300	1750	391, 392
6					2600-3600	3300	1750	371 to 378
6H, 6HF, 8H, 8HF					2600-3600	3300	1750	395 to 397
6HS, 6HSF					2200-3200	3000	1750	393, 394
6S					2200-3200	3000	1750	391, 392
8					2600-3600	3300	1750	375 to 379
9					2200-3200	2900	1200	389, 390
9R6					*2200-3200	*2900	*1200	389, 390
14					2200-3200	2900	1200	389, 390
14R6					*2200-3200	*2900	*1200	389, 390
23					2200-3200	2900	1200	389, 390
23R6					*2200-3200	*2900	*1200	389, 390

* Indicates engine crankshaft RPM on gear reduction models at flywheel. PTO is 1/2, 1/4, or 1/6 engine crankshaft RPM as indicated by number following model letter or number.

Section 2
IGNITION

Briggs & Stratton ignition systems may be divided into eight (8) groups which are similar in many ways:

STYLE 1 Used on Cast Iron Models A, B, H, K, Y, Z, ZZ
To check spark, see Page 2.

STYLE 2 Used on Cast Iron Models FH, FI, FJ, L, M, P, PB, Q, R, S, T, W
To check spark, see Page 2.

STYLE 3 Used on Cast Iron Models I, N, NS, U, WI, WM, WMB, 5, 6, 8
To check spark, see Page 2.

STYLE 4 MAGNEMATIC Used on Cast Iron Models 9, 14, 19, 23, 23A, 191400, 231400
To check spark, see Page 3.

STYLE 5 Used on Cast Iron Model Series 23C
To check spark, see Page 2.

STYLE 6 Used on Cast Iron Model Series 19D, 23D, 193400, 200400, 233400, 243400, 300000, 320000
To check spark, see Page 2.

STYLE 7 Used on Aluminum Model Series 6B, 8B, 60000, through 260000
To check spark, see Page 2.

STYLE 8 MAGNEVAC Used on Aluminum Model Series 253400
To check spark, see Page 2.

Current is produced by an armature (coil), condenser, breaker points, and rotating magnets and is conducted into the firing chamber through the ignition cable and spark plug. It is important that all parts be in good condition, correctly adjusted and properly connected to assure a good spark.

SPARK PLUGS – ALL MODELS

SPARK PLUG, Cast Iron Model Series A through ZZ & 5 through 23D

The plugs recommended for Briggs & Stratton engines are listed in Table No. 4, Section 1, Page 9 and should be installed unless special engine use requires a plug of different heat range.

Check Spark Plug, Cast Iron Model Series A through ZZ & 5 through 23D

Clean spark plug and set gap to .025”, (0.64 mm) Fig. 2. If electrodes are burned away, or if porcelain is cracked, replace with a new plug of the proper heat range. Before assembling the spark plug, place a little graphite grease on the threads to prevent sticking.

IGNITION (cont'd)

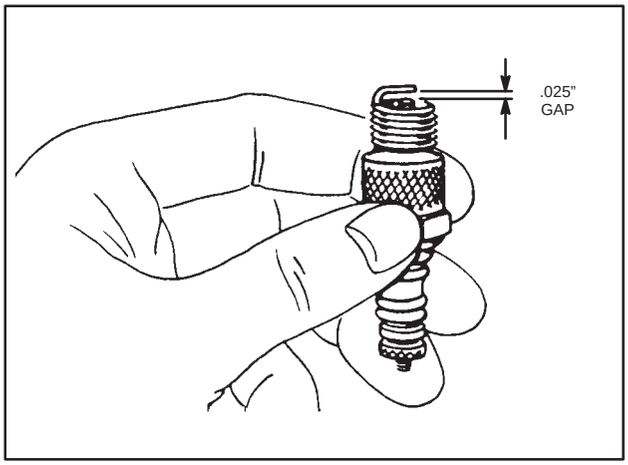

Fig. 2 – CHECKING SPARK GAP

NOTE: Model FI, Check the spark plug firing hole in the cylinder head. If the hole is larger than 1/4" (6 mm), install a spark plug nipple, Part #67773 (NLA).

Spark Plug Service, Aluminum Model Series 6B, 8B, 60000 through 140000

Gap spark plug to .030", (0.76 mm) gap, Fig. 3. Replace spark plug if electrodes are burned away or porcelain is cracked. DO NOT USE ABRASIVE CLEANING MACHINES.

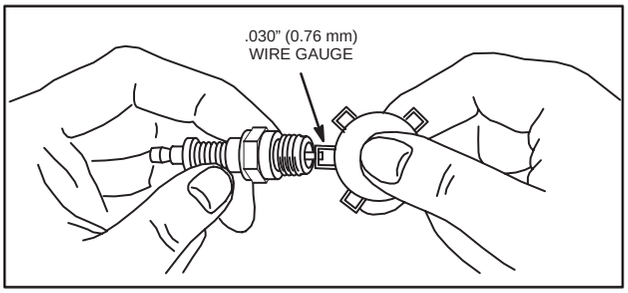

Fig. 3 – ADJUSTING SPARK PLUG GAP

Check Spark, Engine Not Running – All Models

It is easy to check the spark when the magneto is assembled to the engine. Connect Tool #19051 or #19368 to engine block with alligator clip and connect spark plug wire to long screw, Fig. 4. Spin flywheel vigorously. Spark should jump the .166" (4.2 mm) gap steadily.

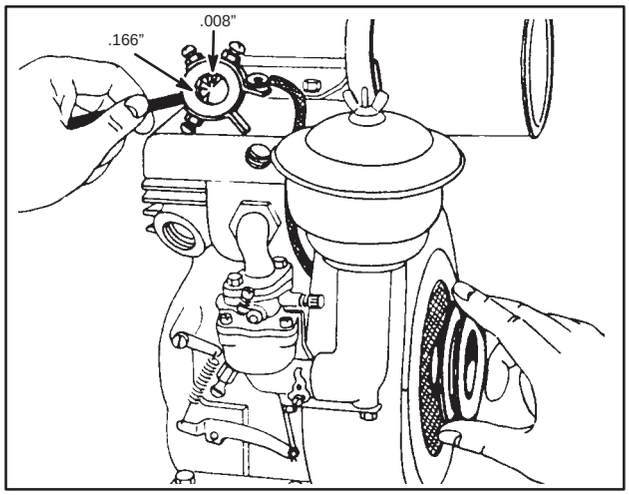

Fig. 4 – CHECKING SPARK

Check Spark With Engine Running All Models Except 9, 14, 23, 23A, 191400, 231400

WARNING

Do not check for spark with the spark plug removed. Use a sealed tester such as part #19051.

With spark plug wire still connected to Tool #19051 or 19368, Spark Tester, move alligator clip from engine to the spark plug terminal. Start engine. The spark should jump the .166" (4.2 mm) gap without missing and engine should run steadily, Fig. 5.

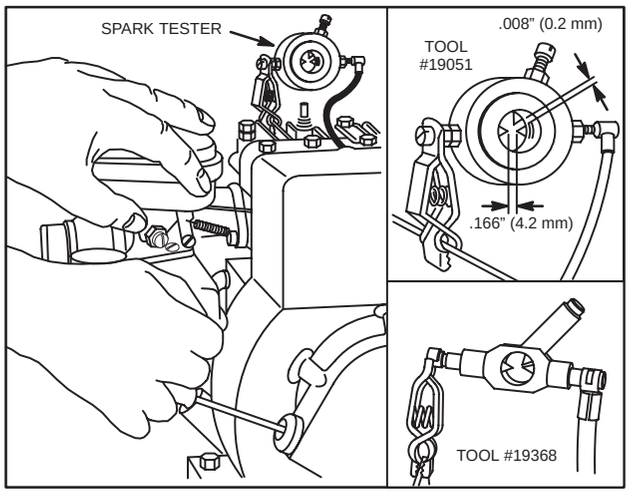

Fig. 5 – CHECKING IGNITION

IGNITION (cont'd)

CHECK IGNITION – MAGNEMATIC Model Series 9, 14, 23, 23A, 191400, 231400

The running spark on these models should be tested by using a new spark plug with a .050" (1.27 mm) gap at the electrode, Fig. 6. If the engine will start and accelerate properly with this .050" (1.27 mm) gap, the spark is satisfactory. Do Not use Tool #19051 or 19368, Spark Tester. Also, do not over-speed the engine while checking the spark.

WARNING

Do not check for spark with the spark plug removed.

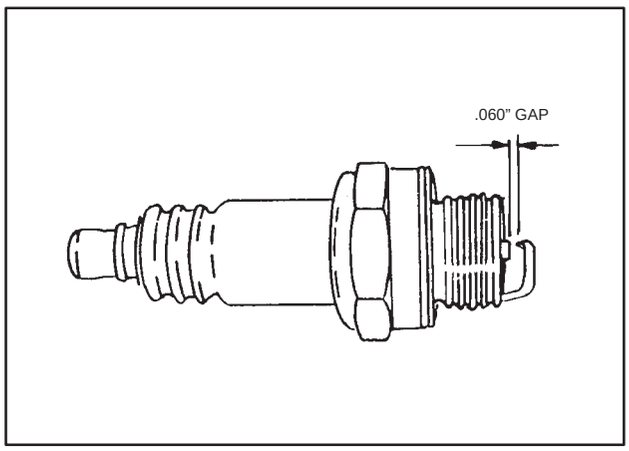

Fig. 6 – CHECKING MAGNEMATIC SPARK

Table No. 7
SPECIFICATIONS FOR CAST IRON ENGINE MODELS

1. **Spark plug gap: .030" (.76 mm)**
2. **Condenser capacity: .18 to .24 M.F.D.**
3. **Breaker point gap: .020" (.50 mm)**

BASIC MODEL SERIES	IGNITION ARMATURE		FLYWHEEL PULLER TOOL NO.	FLYWHEEL HOLDER TOOL NO.	FLYWHEEL TORQUE
	TWO-LEG AIR GAP	THREE-LEG AIR GAP			
CAST IRON CYLINDERS					
N, 5, 6, 8		.012"-.016 " (0.30 to 0.41 mm)	None	19167	55 Ft. Lbs.♦ (75 Nm)
9, 14			19068 or 19203	None	60 Ft. Lbs.♦ (81 Nm)
19, 23, 23A, 191400, 231400			19068 or 19203	None	115 Ft. Lbs.♦ (156 Nm)
19D, 23C, 23D, 193400	.010"-.014" (0.25 to 0.36 mm)	.022"-.026" (0.56 to 0.66 mm)	19068 or 19203	None	115 Ft. Lbs.♦ (156 Nm)
233400	.010"-.014" (0.25-0.36 mm)	.022"-.026" (0.56-0.66 mm)	19068 or 19203	19372	145 Ft. Lbs.♦ (197 Nm)♦
240000, 300000, 320000	.010"-.014" (0.25-0.36 mm)		19068 or 19203	19372	145 Ft. Lbs.♦ (197 Nm)♦

♦ Use 19244 starter clutch wrench on rewind starter engines.

Breaker Point Gap

The point gap on all models is .020" (0.51 mm). Points should be clean and line up squarely.

Breaker Point Tension

1. Models A, B, H, K, Y, Z, ZZ, – 16 to 20 ozs. (455 to 570 grams). To adjust see page 7.
2. Models 9, 14, 23, no adjustment possible.
3. Models I, N, NS, U, WI, WM, WMB, 5, 6, 8 – 16 to 20 ozs. To adjust see page 12.

IGNITION (cont'd)

CONDENSER

The capacity of all condensers is .16 to .24 MFD.

BLOWER HOUSING

REMOVE BLOWER HOUSING

The blower housing on most models are easily removed, but on Models 9, 14, 23 and rope starter Models A, B, K, Z, ZZ, the rope starter pulley must be removed before the the blower housing as follows:

Models A, B

Place a rod or punch through the 3/8" (10 mm) hole in the blower housing on the fuel tank side so the rod passes between fins on the flywheel. This will lock the flywheel so that the flywheel nut can be loosened, Fig. 7.

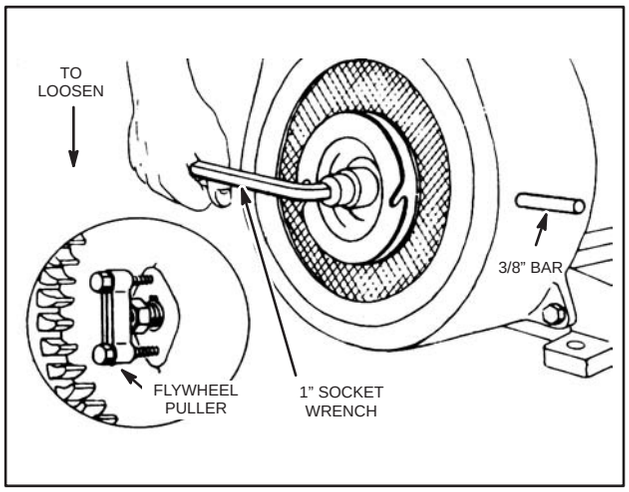

Fig. 7 – REMOVING FLYWHEEL

Models K, Z, ZZ, 9, 14, 23

Remove two cap screws that hold starter pulley to the flywheel. Blower housing can then be removed.

FLYWHEEL

The flywheel on most models is located on the crankshaft with a soft metal key. It is held in place by means of a taper fit and a nut on rope starter engines, and a pinion gear on most crank starter engines. The flywheel key must be in good conditions to assure proper location of the flywheel for ignition purposes. **DO NOT** use a **STEEL** key under any conditions. Use only the soft metal key as originally supplied. The keyway in both flywheel and crankshaft should be in good condition.

Remove Flywheel

First, remove the locking plate, if any, then loosen the flywheel nut or pinion by using a block of wood to keep the flywheel from turning as shown in Fig. 8. Remove nut, lockwasher, or locknut, and starter pulley. Reassemble nut until it is flush with the end of the crankshaft, then strike end of crankshaft a sharp blow with a Babbitt or rawhide hammer to jar flywheel loose.

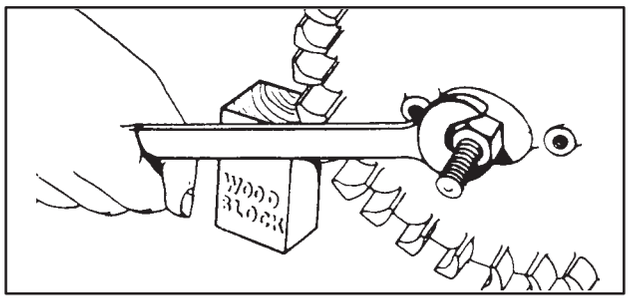

Fig. 8 – REMOVING FLYWHEEL

Models A, B

Use Flywheel Puller Tool #19053 to remove flywheel, Fig. 9.

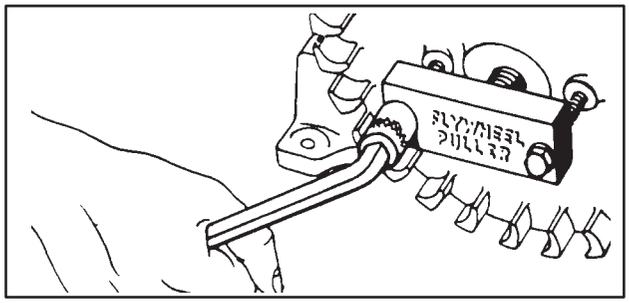

Fig. 9 – REMOVING FLYWHEEL

IGNITION (cont'd)

FLYWHEEL REMOVAL, CAST IRON MODEL SERIES I, N, NS, U WI, WM, WMB, WMI, 5, 6, 8

Remove Flywheel Nut, Rope Start Models

Use Flywheel Holder, Tool #19167, to hold flywheel from turning. The flywheel nut has 1/2" left hand threads, Fig. 10.

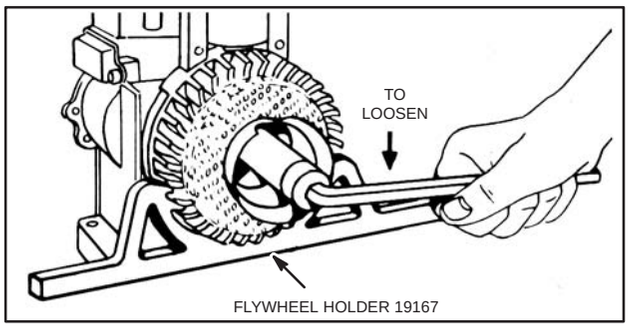

Fig. 10 – REMOVING FLYWHEEL NUT (1/2" DIA. THREADS)

Models K, Z, ZZ

Place a rod or punch into the hole drilled into rim of flywheel to prevent its turning while loosening nut or pinion. Use Flywheel Puller, Tool #19052.

Models 9, 14, 23

Remove flywheel nut. Be careful not to damage the starter pin on the flywheel. Use Flywheel Puller, Tool #19203 to loosen flywheel, Fig. 9. It is not necessary to remove flywheel to adjust or replace breaker points or condenser.

Models H, Y

The flywheel is mounted to the crankshaft with a bolt and nut. Remove the starter lever, pedal, or pulley, and the blower housing. Loosen the flywheel nut and bolt so that you can remove starter clutch assembly. Mark flywheel and crankshaft on the bolt head side. The flywheel hub has two (2) shoulders, the one on the bolt head side is higher than the other. Remove bolt and nut. Use Flywheel Puller, Tool #19054, Fig. 11.

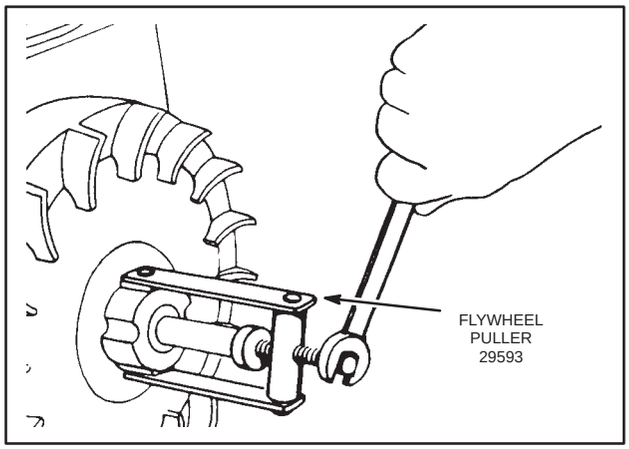

Fig. 11 – REMOVING FLYWHEEL

Assemble Flywheel

Thoroughly clean taper of crankshaft and flywheel. Insert soft metal key into crankshaft keyway, then assemble flywheel. Be sure the key stays in place. Then assemble starter pulley, lockwasher and nut, or starter pinion, and lock as required. Tighten securely.

Models I, N, NS, WI, WM, WMB, WMI, 5, 6, 8

Assemble flywheel first, then insert soft metal key. Use Flywheel Holder, Tool #19059 (NLA). On engines used for scooters, place a little grease on the inner side of the clutch housing to prevent shearing the tangs on the housing lock, Fig. 12.

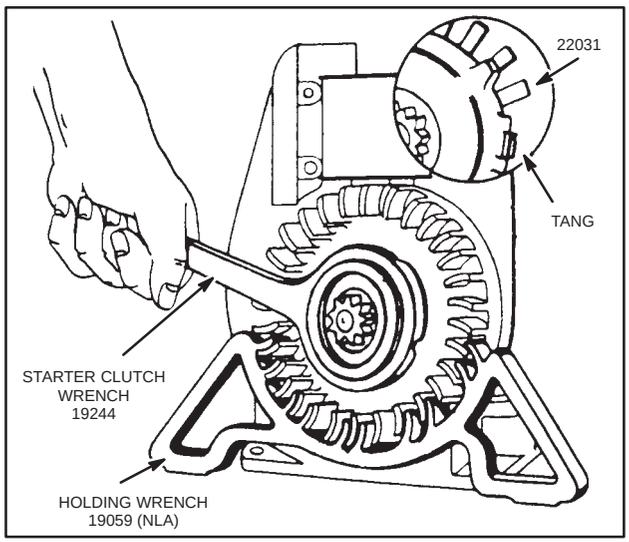

Fig. 12 – ASSEMBLING FLYWHEEL

IGNITION (cont'd)

Models 9, 14, 23

Assemble flywheel with starter pin in 10:30 o'clock positions shown in Fig. 13. This will bring starter crank in bottom position for easy starting. This setting may be changed if the owner desires a different position.

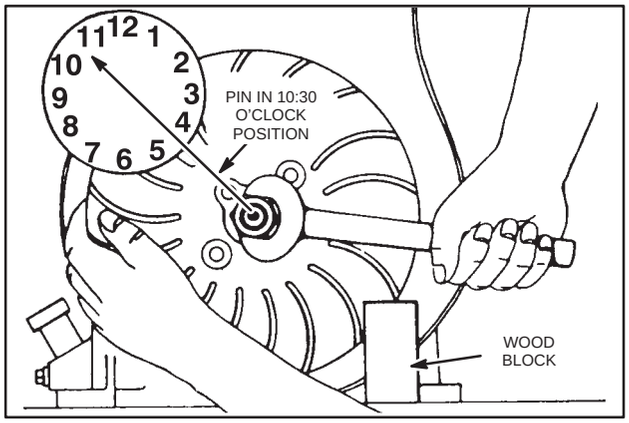

Fig. 13 – ASSEMBLING FLYWHEEL

Models H, Y

Reverse removal operations but be sure the head of the bolt goes on the side of flywheel with the high shoulder.

Repair Flywheel Mounting Hole on Models H, Y

If the crankshaft extension is more than .001" (0.03 mm) undersize or less than the low limit of .936" (23.77 mm) on 75% of its surface, the crankshaft must be replaced with a new one. A loose flywheel fit on a new crankshaft also indicates flywheel replacement is necessary.

To check bolt hole, file roughness from both edges of bolt hole in crankshaft. Insert new flywheel bolt in crankshaft bolt hole before the flywheel is mounted. If the bolt enters bolt hole with either a press or slip fit (without side play) it is not necessary to ream bolt hole.

However, if the flywheel bolt hole in the crankshaft is worn egg shape, or if bolt fits loosely, the hole in both flywheel and crankshaft must be reamed oversize for oversize bolt Part #91681 (NLA). To do this, assemble retainer clip and flywheel to crankshaft and ream all holes in one operations shown in Fig. 14. The latest type oversize flywheel bolt Part #91681 (NLA) has an O.S. stamped on its head. The early type can be identified by the painted red head. If an oversize bolt is loose, worn parts must be replaced.

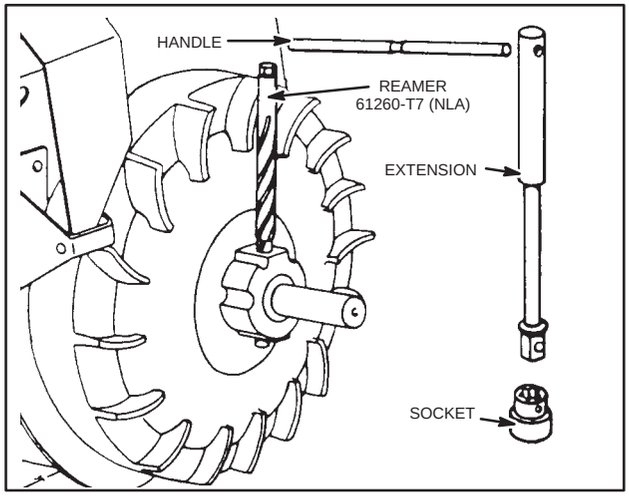

Fig. 14 – REAMING FLYWHEEL HUB

IGNITION CABLE

The ignition cable must not be oil soaked, deteriorated, or broken. These conditions will ground the spark. The end of the cable must be securely bent around the high tension terminal of the coil, but should not be soldered to the terminal.

Model 9, 14, 23, 23A, 191400, 231400

The cable on these models is a part of the coil and cannot be removed. Should the terminal break off, the cable is long enough to replace with a new terminal.

MAGNETOS USED ON MODELS A, B, H, Y, Z, ZZ

Replace Breaker Points

If either point is burned or pitted they should be replaced as a set. After parts are assembled they should be adjusted as shown in Fig. 16.

IGNITION (cont'd)

Adjust Breaker Points

Before adjusting the point gap, the points should be lined up squarely with the proper tension. Loosen the spring bolt and move point spring until points are aligned. Then re-tighten spring bolt. To adjust point tension, Turn crankshaft until points open to widest gap. Loosen block screws and move the block until a 1/16" (1.6 mm) gap is obtained between the breaker spring and the rounded end of the block, Fig. 15. Hold in this position while re-tightening block screws. This should give a point tension of 16-20 ozs.

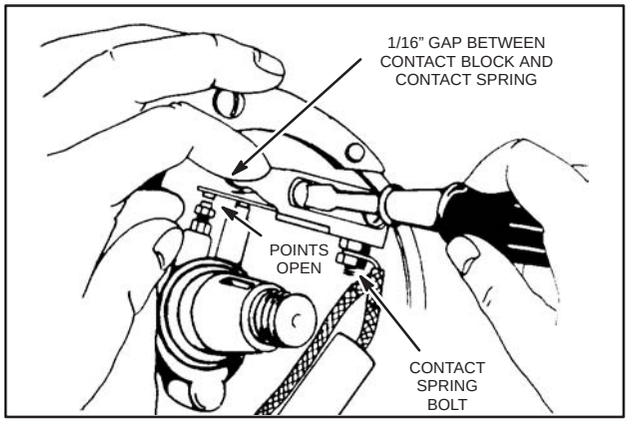

Fig. 15 – ADJUSTING POINT TENSION

Loosen the lock nut to adjust the breaker point gap. Turn screw point until .020" (0.51 mm) gap is obtained, then re-tighten lock nut, Fig. 16.

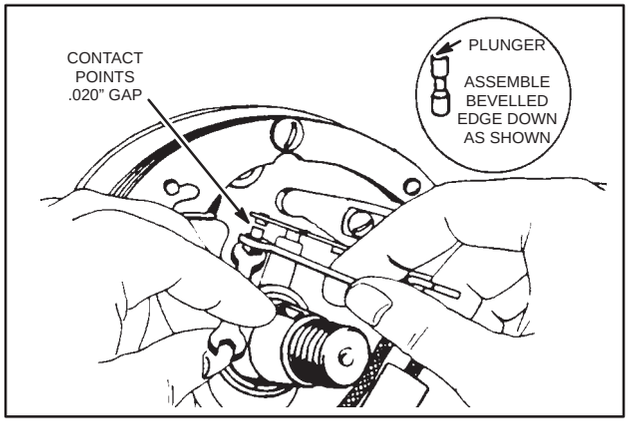

Fig. 16 – ADJUSTING BREAKER POINTS

Check Breaker Plunger

Replace breaker plunger if a .020" (0.51 mm) point gap cannot be obtained.

Replace Condenser

The condenser wire and armature wire on older model engines were soldered to the breaker spring. On later models the wires are fastened by means of a clip assembled to the bolt, Fig. 17.

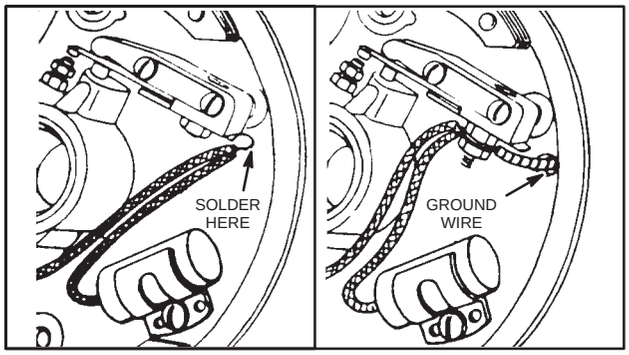

Fig. 17 – REPLACING CONDENSER

Replace Armature

Remove armature wire form breaker spring, and ignition cable from secondary terminal in coil. Unscrew the two (2) armature mounting screws and pry armature loose with a screwdriver. Mount new armature in same position as the old one and tighten in place with two (2) mounting screws. Fasten armature wire to breaker point. Push end of ignition cable through terminal on coil and bend wire firmly with needle nose pliers, Fig. 18.

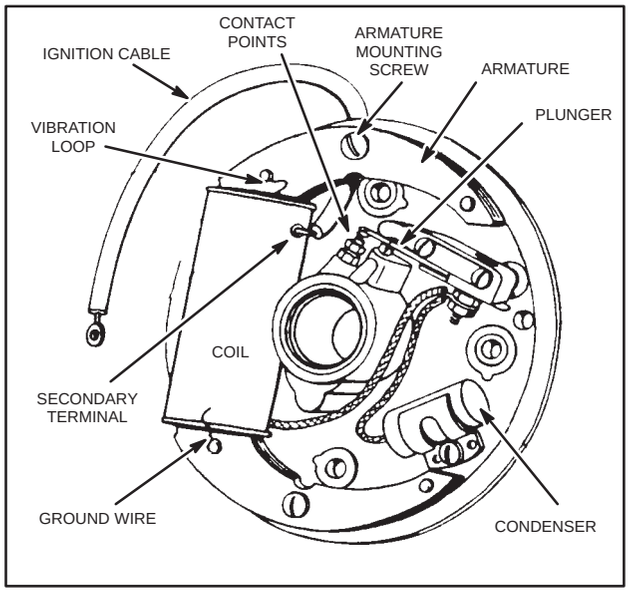

Fig. 18 – REPLACING ARMATURE

IGNITION (cont'd)

Check Breaker Plunger Hole

The breakers points and plunger must be removed in order to check the plunger hole. If the flat end of Plug Gauge, Tool #19067, will enter, the hole is worn and a bushing, Part #63709, should be installed, Fig. 19.

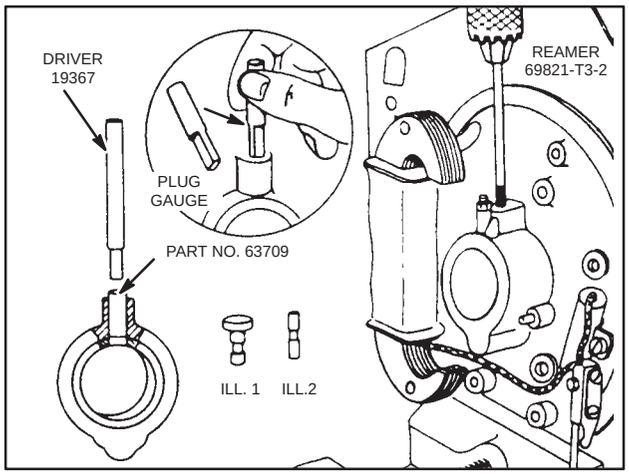

Fig. 19 – INSTALLING BREAKER POINT BUSHING

Install Breaker Plunger Bushing

Remove oil valve from magneto plate. Remove contact block assembly, then loosen armature screws and pull armature away from the magneto plate. Ream plunger hole with reamer, Tool #19064. Reaming can done by hand or in a drill press. It is important that the reamer follows the old hole, Fig. 19.

After reaming, press in bushing, Part #63709, using driver, Tool #19367. When pressing the bushing, Part #63709, into the plunger hole, **BE CAREFUL NOT TO PRESS THE PLUNGER BUSHING INTO THE MAGNETO BEARING,** as this would cause oil pumping through the plunger hole. On early models, bushing, Part #63709, will extend 1/8" (3 mm) above the boss in the magneto plate, but on the later models it will be even with the top of the boss. On early models the boss is 3/8" (10 mm) high. On later models the boss is 1/2" (13 mm) high, Fig. 20.

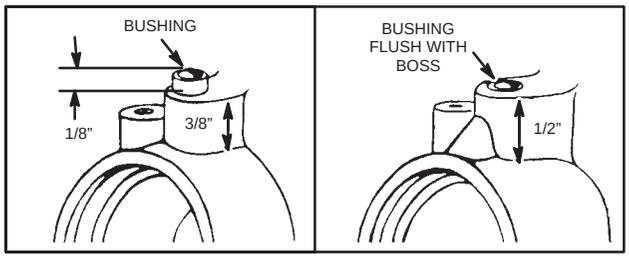

Fig. 20 – INSTALLING BREAKER POINT BUSHING

On engines with vacuum breathers, a by-pass hole is provided which slants upward from the oil groove just inside the oil retainer to the contact plunger hole, Fig. 21. After a new bushing has been installed, the hole must be drilled out with a 5/32" (4 mm) drill before bushing is reamed. After bushing, Part #63709, is in place, it must be reamed with a reamer, Tool #19066, to assure a free fit for the contact plunger. Before reassembling magneto plate to engine, be sure the oil return hole and bearing is clean and the oil valve is in working order. Assemble point plunger with the beveled edge at the recess down, Fig. 21. Discard old style plunger and replace it with Part #65414, new style plunger.

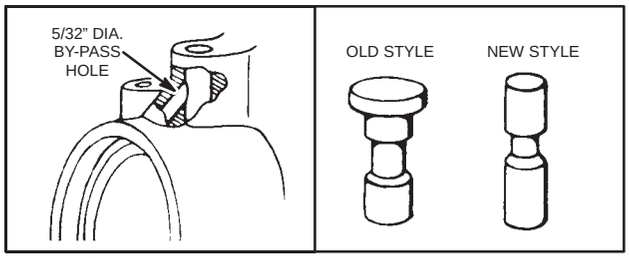

Fig. 21 – INSTALLING BREAKER POINT BUSHING

Remove Breaker Plunger Bushing

If the magneto plate has been repaired and a plunger bushing installed, or it originally equipped with bushing, it will be necessary to turn driver, Tool #19065, as shown in Fig. 22. The driver may then be used either to remove the old bushing or insert the new one. However, in this case, care must be taken not to drive the new bushing too far.

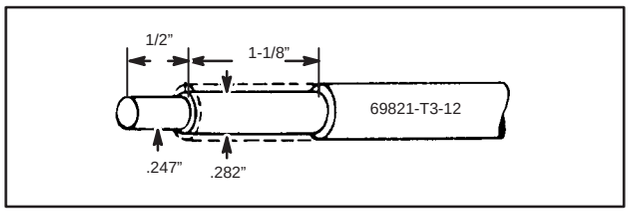

Fig. 22 – CONVERTING DRIVER

IGNITION (cont'd)

Replace Ignition Cable

Assemble Part #66128 (NLA), rubber washer to ignition cable so it will be against the magneto plate on the outside, Fig. 23, Ill. 3. This will prevent water from entering the magneto. Push ignition cable through the hole in magneto plate. Loop end of cable through hole in terminal on coil, then bend wire with pliers until it is securely fastened to the terminal. **DO NOT SOLDER**, Fig. 23, Ill. 2.

NOTE: On ignition cables with shielding, the rubber washer, Part #66128 (NLA), is assembled to cable at inside end, Fig. 23, Ill. 1. If ignition cables are made from spool stock, the end attached to coil should be tinned before assembly so that it will be stiff enough to hold firmly to terminal.

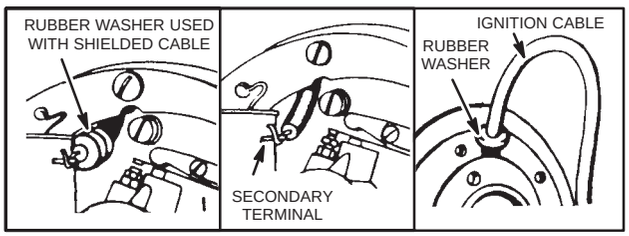

Fig. 23 – REPLACING IGNITION CABLE

Time Magneto

The magneto is always correctly timed when the flywheel is properly assembled. Do not attempt to change timing by relocating any parts or filing the crankshaft flat.

Adjust Armature Air Gap

Chalk edges of armature laminations and mount flywheel in place. Turn flywheel several revolutions by hand. Remove and examine edges of armature laminations. The high spots will have chalk marks rubbed off. Loosen the mounting screws very slightly, tap the high side lightly to center the armature, then re-tighten the mounting screws, Fig. 24.

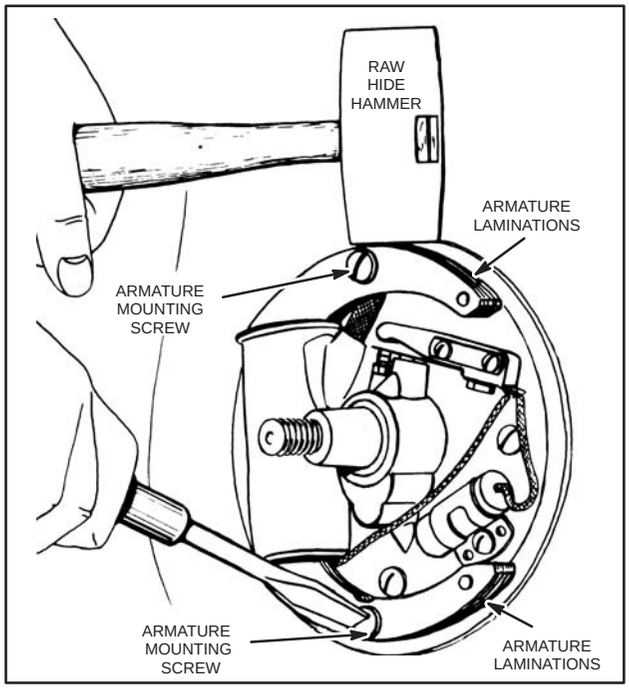

Fig. 24 – ADJUSTING ARMATURE AIR GAP

MAGNETOS USED ON MODELS FH, FI, FJ, L, M, PB, Q, R, S, T, W

Adjust Breaker Points

Turn crankshaft until points open to widest gap. Loosen contact bracket screw, then move contact bracket to or from breaker arm point until a point gap or .020" (0.51 mm) is obtained, Fig. 25.

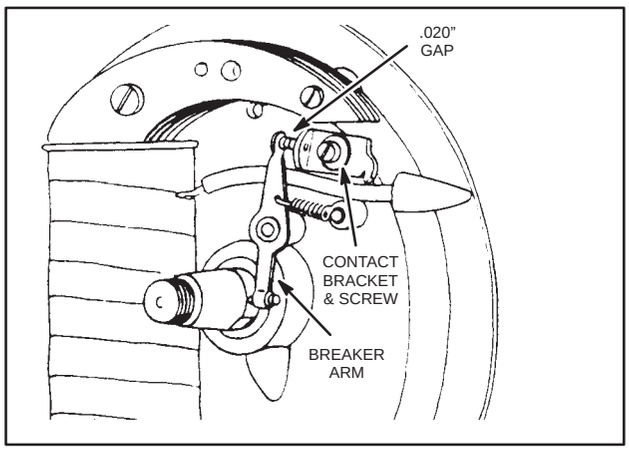

Fig. 25 – ADJUSTING BREAKER POINTS

IGNITION (cont'd)

Replace Condenser

Remove old condenser by un-soldering condenser wire. If primary wire is loosened, it should be re-soldered with new condenser wire, Fig. 26.

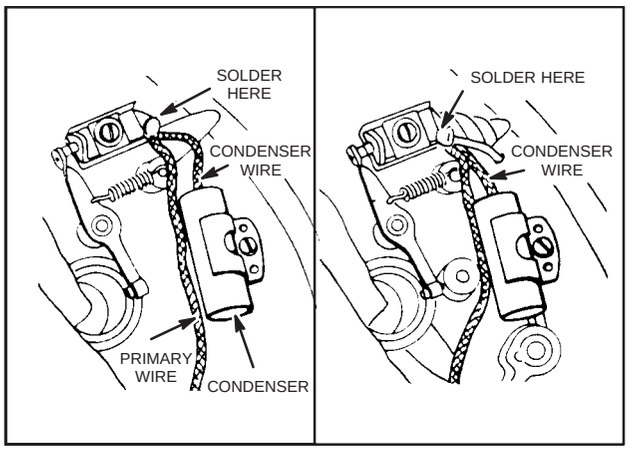

Fig. 26 – REPLACING CONDENSER WIRE

Replace Armature

Remove armature wire from contact bracket. Remove the ignition cable from the terminal on the coil. Unscrew four armature mounting screws. Hold magneto plate and pry armature loose with a screwdriver. To test coil be sure to fasten both secondary ground loops (A and B) to the core, Fig. 27. The secondary of this coil is split and the ground wires are not connected inside the coil. Failure to fasten either or both of these ground wires will result in a weak or dead coil. Mount armature on the two (2) locating pins as shown in Fig. 27. Fasten armature to plate with four (4) mounting screws – with two (2) screws next to coil end inserted in loop A and B. Fasten ignition cable to terminal of coil. Dirt under the stop button spring in blower housing, or on air guide in some models, will cause a short. Check and clean.

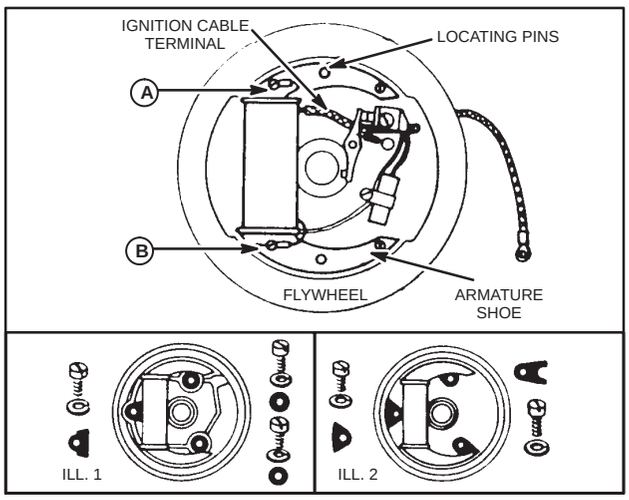

Fig. 27 – REPLACING ARMATURE

NOTE: EARLY MODEL FH engines were not equipped with steel locking plates under mounting screws and lockwashers of magneto plates. This caused screws and lockwashers to become loose and damage the magneto. On magneto plates with reinforcing rib as shown in Fig. 27, Ill. 1, use locking plate, Part #69711 (NLA). On plates without reinforcing rib, use Part #69712 (NLA), Fig. 27, Ill. 2.

Replace Ignition Cable

Push ignition cable through hole in magneto plate. Loop end of cable through hole in terminal on coil, then bend wire with needle nose pliers until it is firmly fastened to the terminal. **DO NOT SOLDER.**

Time Magneto

With contact points at .020" (0.51 mm) gap, insert flywheel key in shaft and securely mount Tool #MPJ-T4 (NLA) on crankshaft. Place a .003" (0.08 mm) feeler gauge between contact points and move crankshaft clockwise until point closes, then open to .003" (0.08 mm) gap. If the pointer of gauge line up with the end of the armature shoe, as shown in Fig. 28, Ill. 1, timing is correct. If the pointer is past the armature shoe as shown in Fig. 28, Ill. 2, the timing is late. To correct, install a new fiber tip, Part #65014 (NLA), on breaker arm and recheck. If pointer is ahead of the end of the armature as shown in Fig. 28, Ill. 3, file bevel of fiber tip until the pointer lines up with end of shoe.

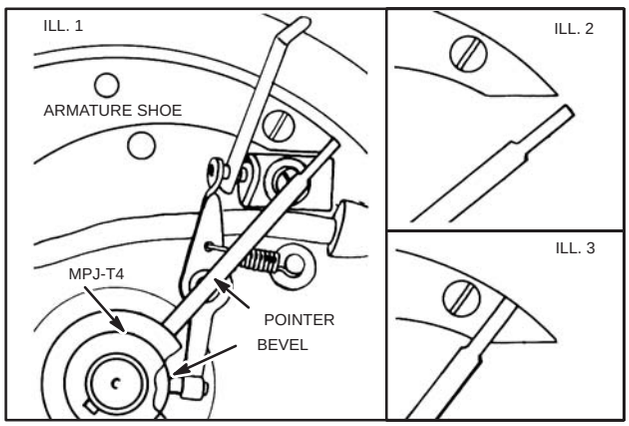

Fig. 28 – TIMING MAGNETO

IGNITION (cont'd)

MAGNETOS USED ON MODELS I, N, NS, U, WI, WM, WMB, WMI, 5, 6, 8

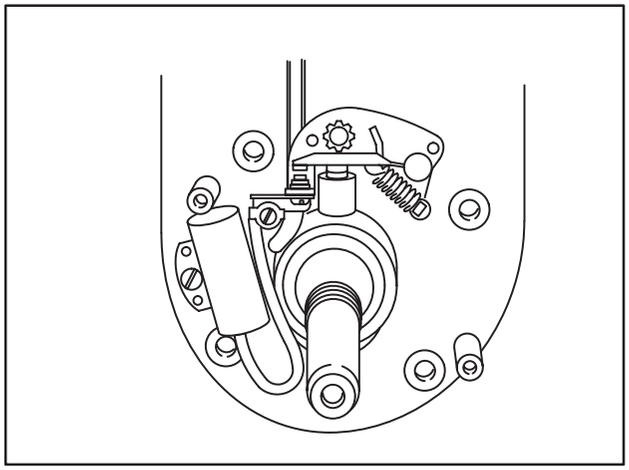

Fig. 29 – CAST IRON MODEL SERIES I, N, NS, U, WI, WM, WMB, WMI, 5, 6, 8

Remove Breaker Points

Loosen screw on breaker point assembly and remove armature primary wire and condenser wire, Fig. 30. Remove screw holding breaker point to armature plate and remove points.

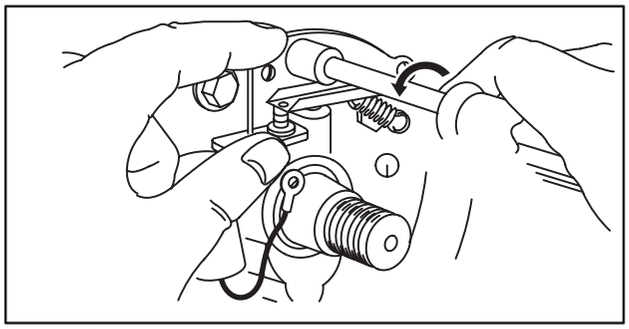

Fig. 30 – REMOVING BREAKER POINTS

Install Breaker Points

To assemble, place the varnished insulator used with the new style points beneath the point bracket.

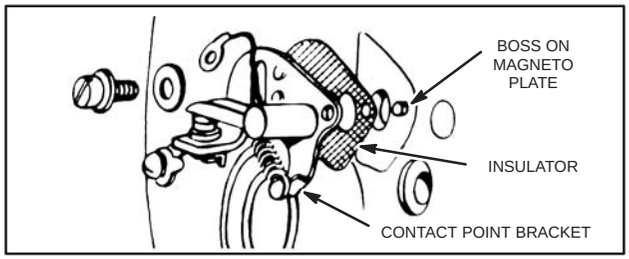

Fig. 31 – REPLACING BREAKER POINTS

The small boss on magneto plate should protrude through the small hole in insulator and enter the hole into the point bracket, Fig. 31. If a small insulator is fastened to the clip, the cambric insulator is unnecessary.

Fasten the condenser and armature wires to the breaker points with the clip and screw. The clip must not touch the condenser, or the ends of the wires touch the bracket as this will short the circuit.

Place armature wire and condenser wire under wire terminal, Fig. 32. Note position of wires. Install breaker point set on engine with cast boss in plate entering hole in point set, Fig. 32.

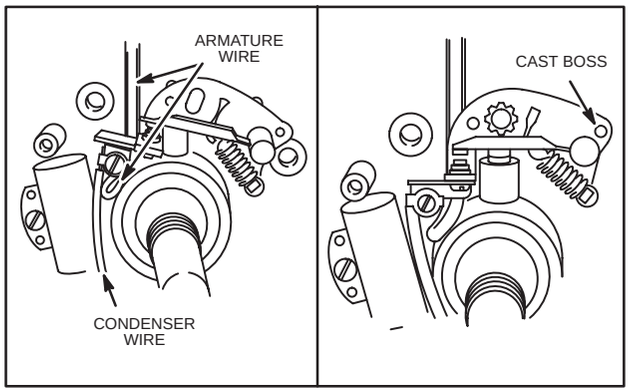

Fig. 32 – BREAKER POINTS WIRE ROUTING

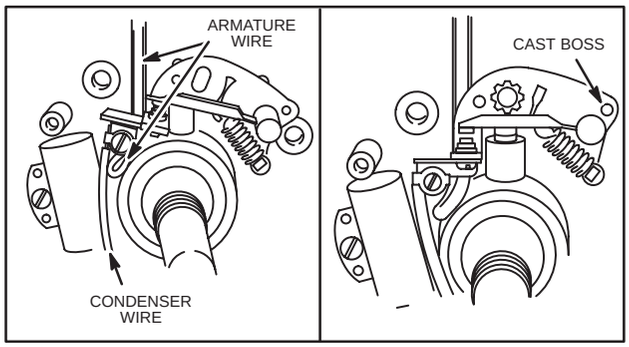

Fig. 33 – ADJUSTING STYLE II BREAKER POINTS

IGNITION (cont'd)

Adjust Breaker Points

Turn crankshaft until points open to widest gap. Loosen adjusting lock screw and move contact point bracket up or down to obtain .020" (0.51 mm) gap. Tighten adjusting lock screw, Fig. 34. Turn crankshaft so that contact points are closed. Twelve to sixteen ounce tension should open the points. If tension is too weak, bend contact spring tang to get proper tension.

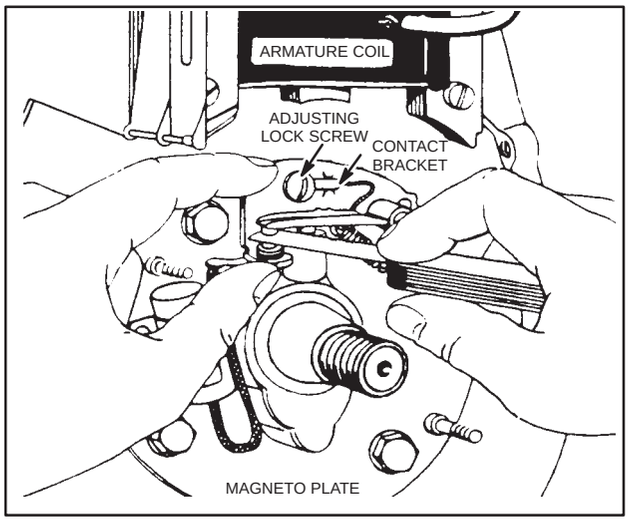

Fig. 34 – ADJUSTING CONTACT POINTS

Check Breaker Plunger

If the plunger is so short that a .020" (0.51 mm) point gap cannot be obtained, the plunger should be replaced with a new one.

Replace Condenser

On older models the condenser wire is soldered to the brass tang on the point bracket. On later models the condenser wire is fastened to the point bracket by means of a clip and screw, Fig. 35.

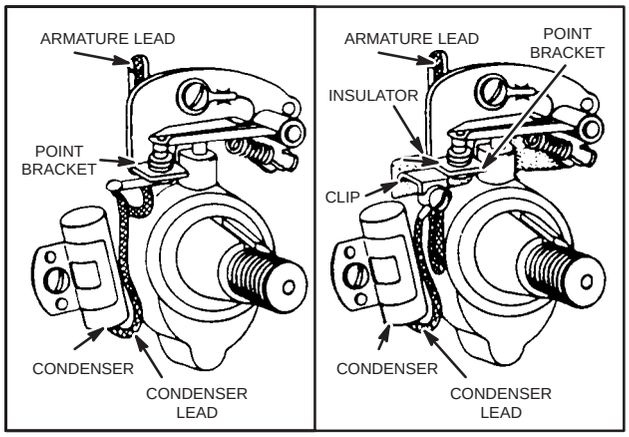

Fig. 35 – REPLACING CONDENSER

Replace Armature

Remove armature lead wires, ignition cable, four (4) armature mounting screws, lockwashers, and plain washers. To replace, reverse operation, Fig. 36. Be sure to adjust air gap after flywheel is assembled.

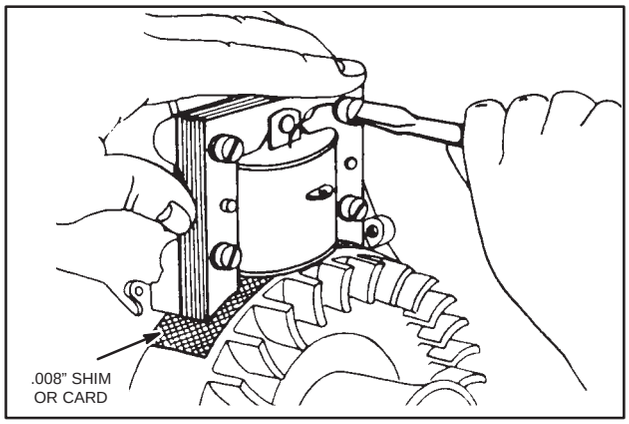

Fig. 36 – REPLACING ARMATURE

IGNITION (cont'd)

Check Breaker Plunger Hole

The breaker points and plunger must be removed in order to check the plunger hole. If the flat end of plug gauge, Tool #19055, will enter the hole is worn and a new bushing, Part #23513 should be installed, Fig. 37.

Models 9, 14, 23, 23A, 191400, 231400

To re-bush the plunger hole, it is necessary that the magneto be removed and that the armature, breaker points, and oil return valve (if there is one) be removed from the magneto plate.

Place reamer, Tool #19056, in a drill press chuck. Lift magneto plate until the pilot on the end of the reamer enters the plunger hole to be sure that the reamer is properly aligned with the old hole. Holding the magneto plate in this position, bring the drill press down until bottom of magneto plate touches the drill press table. To check for vertical alignment, see that the armature mounting bosses are equal distances from the reamer. Start drill press and ream hole. Use Tool #19057 to drive the bushing (Part #23513) into the hole until the top of bushing is flush with top of hole, Fig. 37. Use reamer, Tool #19058, to finish ream the bushing to size for plunger. The finish reaming should be done by hand.

Remove Breaker Plunger Bushing

If the magneto plate has been repaired and a plunger bushing installed, or it originally equipped with bushing, it will be necessary to turn driver, Tool #19057, as shown in Fig. 38. The driver may then be used either to remove the old bushing or insert the new one. However, in this case, care must be taken not to drive the new bushing too far.

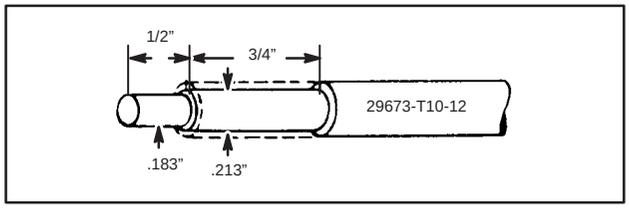

Fig. 38 – CONVERTING DRIVER

Install Breaker Plunger Bushing

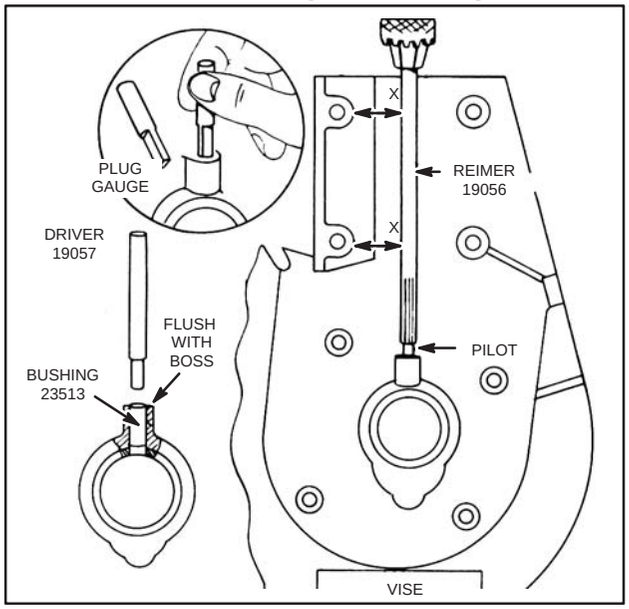

Fig. 37 – INSTALLING BREAKER PLUNGER BUSHING

Replace Ignition Cable

Loop end of cable through hole in terminal on coil and bend wire with pliers until it is securely fastened to the terminal. **DO NOT SOLDER.**

Replace Ground Wire

The ground wire is fastened to the breaker points together with the condenser wire. A flat clip is usually used on the back side of the magneto plate to keep the ground wire from pulling out. If this clip is not available, a knot can be tied in the ground wire just inside the magneto plate.

IGNITION (cont'd)

Time Magneto

The magneto is always correctly timed when the flywheel is properly assembled. Do no attempt to change timing by relocating any parts or filing crankshaft flat.

Adjust Armature Air Gap

The air gap between flywheel and armature should be from .002" to .012." (0.05 to 0.30 mm) A badly worn magneto bearing may cause this gap to decrease when the engine is running.

Turn flywheel until magnets are directly below the armature laminations. Raise armature and insert a strip of .008" (0.20 mm) brass shim stock, or Instruction Tag, MS-1342 (supplied with new armatures) between the end of the armature laminations and the flywheel magnets. Press armature down and tighten screws. Pull shim out, Fig. 36.

NOTE: If a detached magneto assembly has been repaired, Instruction Tag, MS-1342 should be sent to customer with the magneto. This will instruct the customer on how to adjust the armature air gap on his own engine.

MAGNEMATIC IGNITION USED ON MODELS 9, 14, 23, 23A, 191400, 231400

Magnematic ignition, with ignition armature and rotor behind the flywheel and external breaker points, Fig. 39.

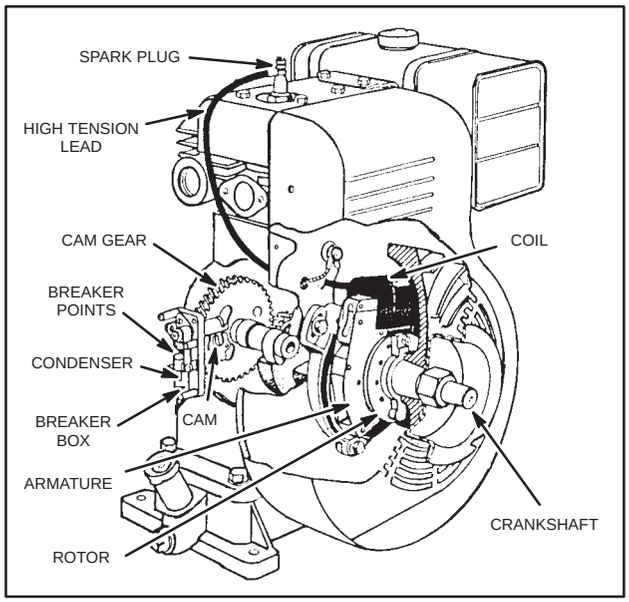

Fig. 39 – MAGNEMATIC IGNITION

Remove Breaker Points

Remove two cover screws and breaker point cover. Turn crankshaft until breaker points are at their widest gap. Remove terminal screw and spring screw. Loosen breaker shaft nut until nut is flush with end of shaft. Tap nut to free breaker arm from tapered end of breaker shaft.

Remove nut, lockwasher and breaker arm. Remove breaker plate screw, breaker plate, insulating plate, eccentric and oil seal clamp bushing. Pry out breaker shaft seal with a sharp pointed object, Fig. 40.

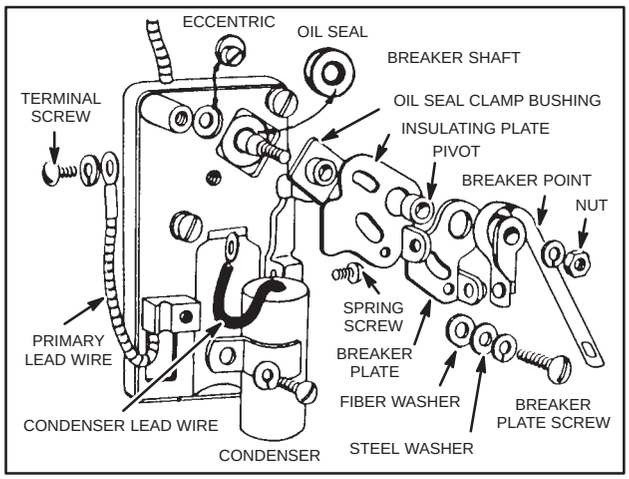

Fig. 40 – REMOVING BREAKER POINTS

IGNITION (cont'd)

Remove Breaker Box

Remove two mounting screws and remove breaker box and gasket, turning box slightly to clear arm at inner end of breaker shaft, Fig. 41.

NOTE: Breaker points do not have to be removed to remove breaker box.

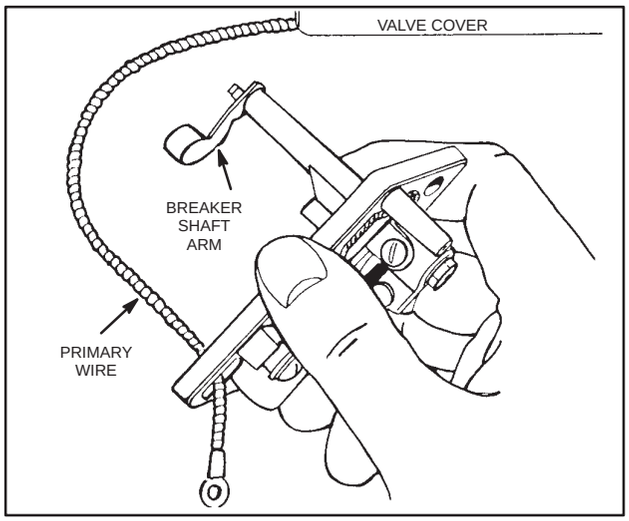

Fig. 41 – REMOVING BREAKER BOX

Remove Breaker Shaft

After breaker points have been removed, the breaker shaft should be turned one-half turn clockwise to clear retaining boss on the inside of the breaker box. Pull shaft out of box.

Remove Coil Models 9, 14, 23

Disconnect coil primary and ground wires. Pry off clips holding coil core to armature and lift off coil and coil core. Coil core is a slip fit and can be pushed out of coil, Fig. 42.

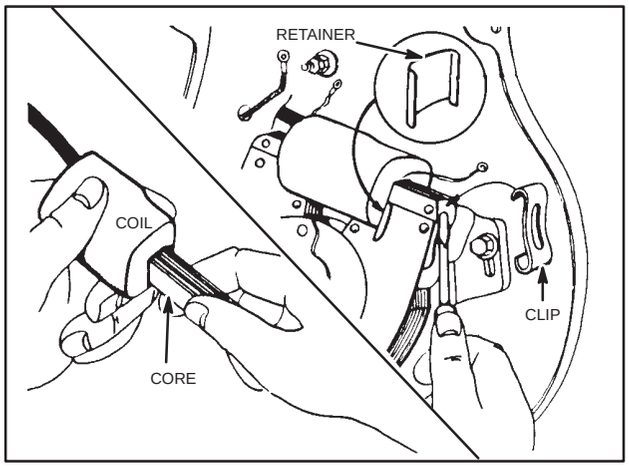

Fig. 42 – REMOVING COIL

Remove Armature

Armature is held to back plate by three screws and lockwashers. After removing three screws and lockwashers, slide armature and support off rotor. The rotor will exert a strong magnetic pull on the armature.

2

Test Coil And Condenser

Use an approved tester to test coils and condensers. Specifications are supplied by the tester manufacturer or refer to MS-7862, Testing Briggs & Stratton Coils.

Remove Rotor

Two styles of rotors have been used on Magnematic ignition engines. The early style was held in place by a woodruff key and a set screw. The later style rotor was held in place with a woodruff key and clamp. The rotor clamp must always remain on the rotor unless the rotor is on the crankshaft or a loss of magnetism will result, Fig. 43.

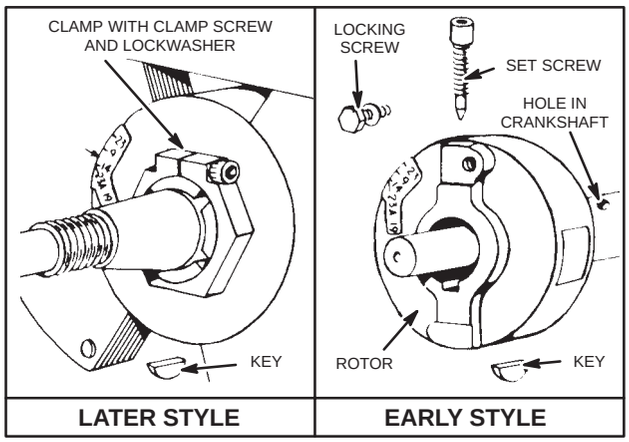

Fig. 43 – REMOVING ROTOR

Install Rotor (With Set Screw)

Place woodruff key in crankshaft keyway. Slide rotor onto crankshaft until set screw hole in rotor and crankshaft line up. Be sure woodruff key is still in place. Tighten set screw securely and then tighten lock screw. The lock screw is self-tapping and locking screw hole does not need to be tapped, Fig. 43.

IGNITION (cont'd)

Install Rotor (With Clamp)

Place woodruff key in crankshaft keyway. Slide rotor onto crankshaft until set screw hole in rotor and crankshaft line up. Be sure woodruff key is still in place. Tighten set screw securely, Fig. 44.

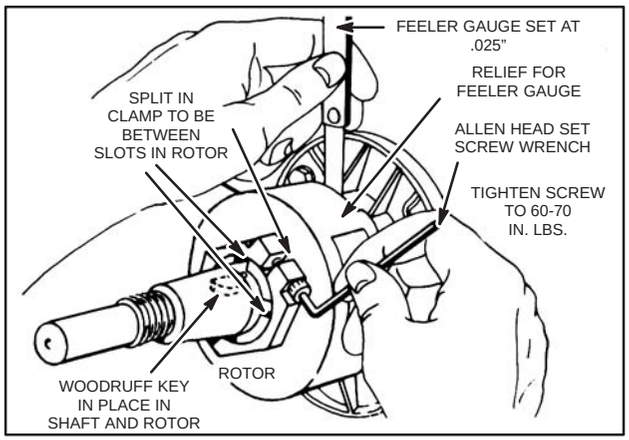

Fig. 44 – INSTALLING ROTOR (WITH CLAMP)

Install Breaker Shaft

Insert breaker shaft with arm toward top of breaker box so breaker arm will clear retainer boss. Push shaft all the way in and then turn shaft until arm is down.

Install Breaker Points

Press in new oil seal with metal side out. Lay eccentric and oil seal clamp bushing in their recesses. Install insulating plate, pilot and breaker plate. Detent in breaker plate must be engaged with hole in insulating plate. Install breaker plate screw finger tight, Fig. 45.

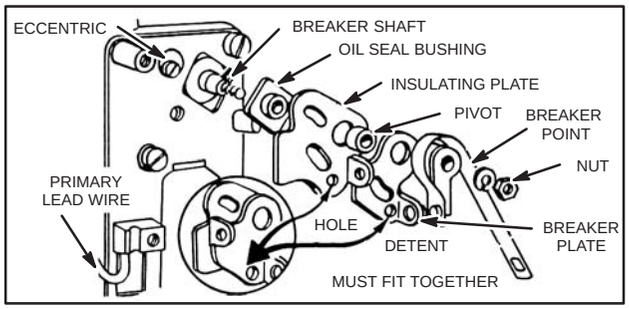

Fig. 45 – ASSEMBLING BREAKER BOX

Adjust eccentric until edge of breaker plate is parallel with edge of breaker box. Install breaker point on breaker shaft with lockwasher and nut finger tight. Install breaker point spring and spring screw and tighten screw. Turn breaker arm until flat on breaker arm is parallel with edge of breaker box and while holding arm, tighten nut to secure breaker point to shaft, Fig. 46.

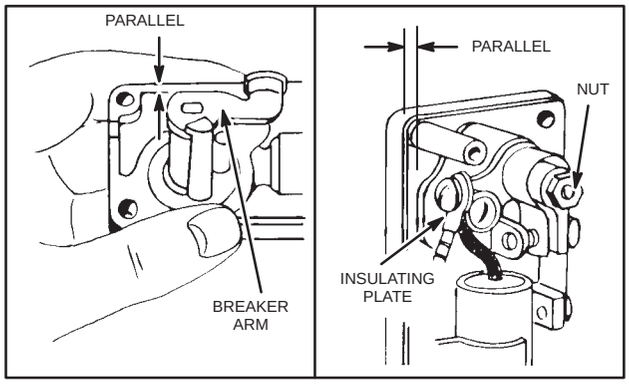

Fig. 46 – ADJUSTING BREAKER BOX

Install Breaker Box

Pull primary wire thru hole in lower left hand corner of breaker box. Locate primary wire along left hand edge of box and in notch at top of box. Install box in opening in cylinder and install two mounting screw. Tighten mounting screws.

Adjust Breaker Points

With breaker plate screw loosened slightly, turn eccentric until point gap is .020" (0.51 mm). Tighten breaker plate screw and recheck point adjustment. Readjust as required, Fig. 47.

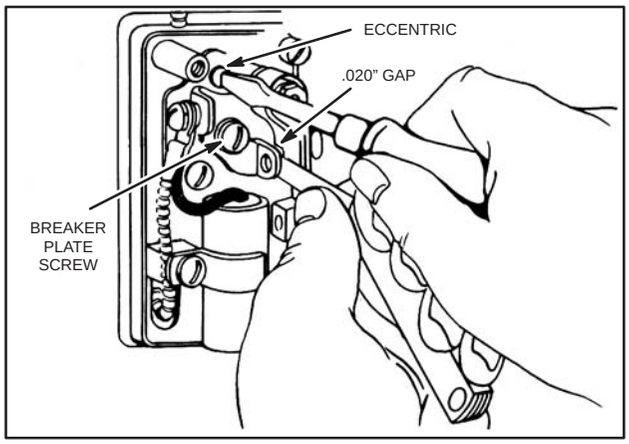

Fig. 47 – ADJUSTING BREAKER POINTS

IGNITION (cont'd)

Clean Breaker Points

Turn crankshaft until breaker points are closed. Open breaker points and insert a piece of lint-free paper and close points. Rotate paper using breaker points as a pivot point. Open breaker points and withdraw paper from breaker points. Removing paper with breaker points closed can tear paper and will leave dirt on the breaker points. Continue to clean breaker points until paper comes out clean.

Install Armature

Carefully install armature over rotor and line up oblong holes in armature support with hole in back plate. Install three mounting screws and washers finger tight.

Install Coil

Push coil core into coil with rounded edge towards ignition cable. Lay coil and core on armature with coil retainer between coil and armature and round edge up. Hook clips into armature and then push upper end of clips onto coil core.

NOTE: On Model 9 engines, knot ignition cable before inserting cable thru back plate, Fig. 48.

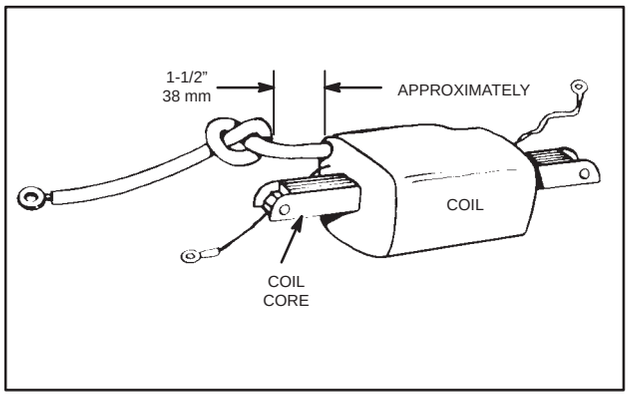

Fig. 48 – SHORTENING CABLE

Time Rotor

Using Digital Multimeter, Tool #19357 or VOA meter, Tool #19236, set meter to ohms (Ω) and zero meter as required, and connect test leads to ground and to breaker point wire. Turn crankshaft until points close (low ohms reading). Continue to turn crank shaft until points just start to open (high ohms reading). With armature mounting screws slightly loose, rotate armature until arrow on armature lines up with mark on rotor for model of engine.

Example: For Model Series 14, 19, 23A, 191000 and 231000 line up with mark for 14, 19, 23A, Fig. 49.

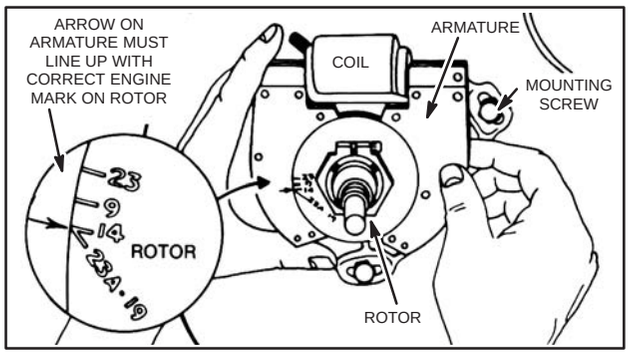

Fig. 49 – TIMING ROTOR

Check Armature Air Gap

Armature air gap is fixed on engines with Magnematic ignition but will change if crankshaft journal or magneto bearing or both wear. Check for wear with a one-half inch wide feeler gauge .004" (0.10 mm) thick. Check with feeler gauge away from rotor magnets or a false reading will occur, Fig. 50.

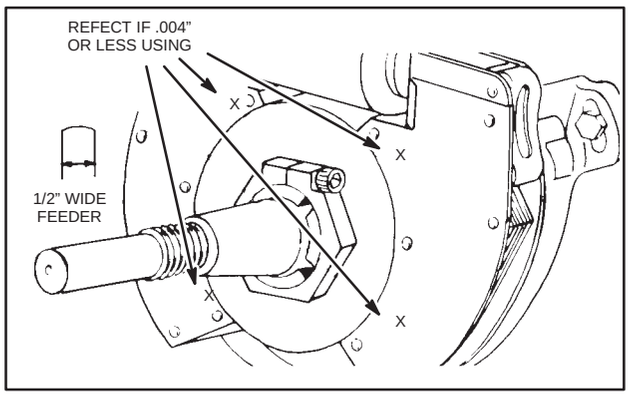

Fig. 50 – CHECKING FOR WEAR

Install Flywheel (When Equipped with Starter Pin)

With rotor correctly adjusted, Fig. 49, slip flywheel onto crankshaft with starter pin at the 10:30 o'clock position, for easy starting. Torque flywheel, Fig. 51, to specifications shown in Table No. 7, page 3.

IGNITION (cont'd)

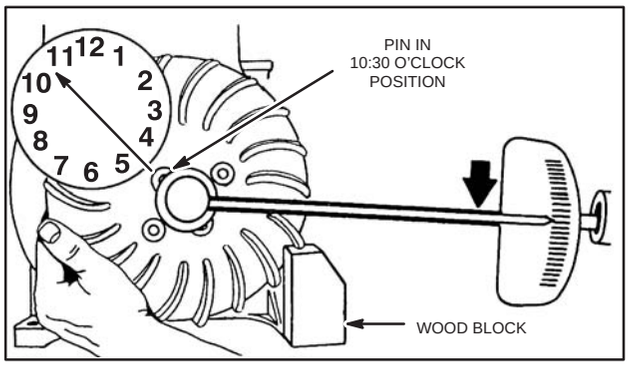

Fig. 51 – INSTALLING FLYWHEEL WITH STARTER PIN

Install Flywheel (Without Starter Pin)

Slip flywheel onto crankshaft at any position and torque flywheel to specifications shown, Table No. 1, Page 3.

MAGNETO, MODEL SERIES 23C

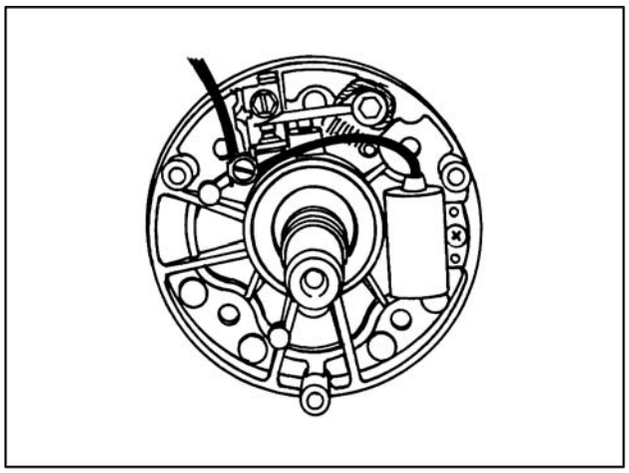

Fig. 52 – MODEL SERIES 23C

Remove Breaker Points

Loosen screw holding armature primary wire and condenser wire and remove wires, Fig. 53. Remove post mounting screw and remove post, moveable breaker point, and breaker spring, Fig. 53. Remove screw holding stationary point and remove stationary point.

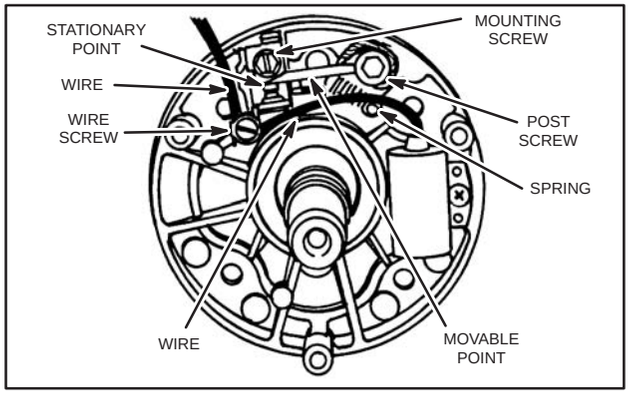

Fig. 53 – REMOVING BREAKER POINTS

Check Breaker Point Plunger

Replace breaker point plunger if worn to .870" (22.09 mm) or less. Insert plunger with groove towards breaker points or oil will enter breaker point box, Fig. 54.

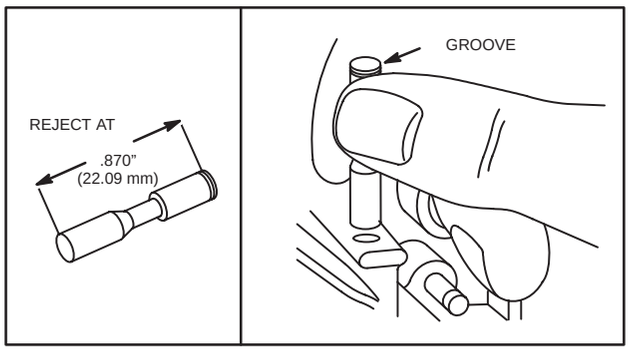

Fig. 54 – CHECKING BREAKER POINT PLUNGER

Install Breaker Points

Install armature primary wire and condenser wire on wire terminal of stationary point bracket and tighten screw, Fig. 55. Install point bracket and screw on bearing support plate.

Install breaker point plunger, Fig. 54. Install post into recess of bearing support plate with groove of post in notch of recess, Fig. 55. Note position of braided wire. Tighten mounting screw securely.

Hook open end of breaker spring into two holes of breaker arm, Fig. 55, and then hook closed loop of spring over spring post and into groove on post. Push flat of breaker arm toward groove in mounting post until flat engages groove, Fig. 55.

IGNITION (cont'd)

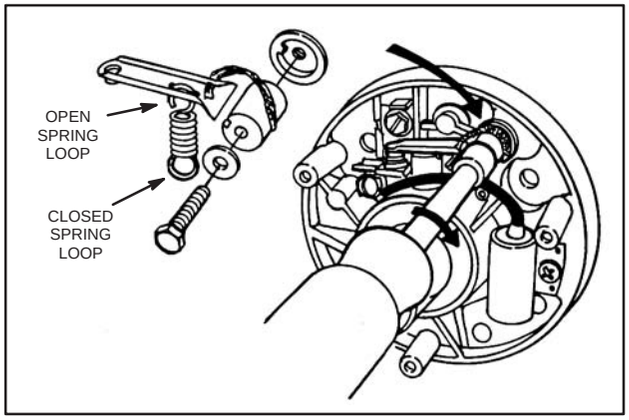

Fig. 55 – INSTALLING BREAKER POINTS

Adjust Breaker Points

Turn crankshaft until breaker points are at their widest gap. Mounting screw should be finger tight. With a screwdriver in the adjusting slot, move point bracket until breaker points are gapped .020" (0.51 mm) wide, Fig. 56. Tighten mounting screw and recheck gap.

NOTE: Engines burning kerosene, set points to .015" (0.38 mm) gap.

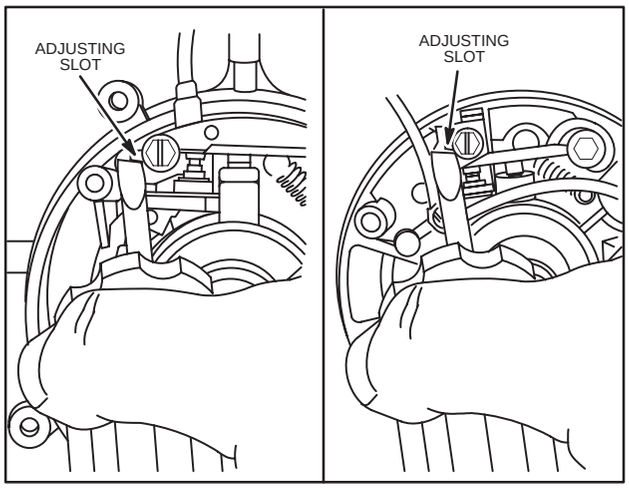

Fig. 56 – ADJUSTING BREAKER POINTS

FLYWHEEL MAGNETO IGNITION BREAKER POINTS – EXTERNAL

2

Remove Breaker Points Model Series 19D, 23D, 233400, 243400, 300000, 320000

1. Remove breaker cover and gasket.
2. For ease of assembly and point adjustment, if crankshaft was not removed, turn crankshaft until breaker points are at their widest gap.
3. Remove condenser, upper, and lower mounting screws.
4. Loosen lock nut and turn point adjustment screw counterclockwise to remove breaker points, Fig. 57.

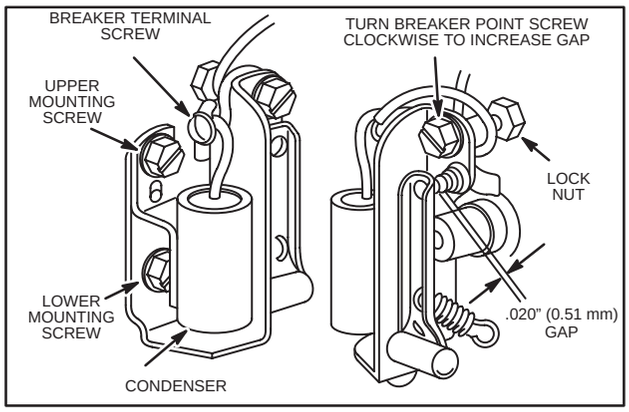

Fig. 57 – REMOVING BREAKER POINTS

Breaker Point Plunger Seal

A seal, eyelet, and retainer were used on later production engines to prevent oil leakage past the breaker point plunger. If points were contaminated with oil on engines without these parts, add these parts to stop contamination, Fig. 58.

NOTE: EXTREME CARE SHOULD BE TAKEN WHEN INSTALLING SEAL ON PLUNGER TO PREVENT FRACTURING SEAL.

IGNITION (cont'd)

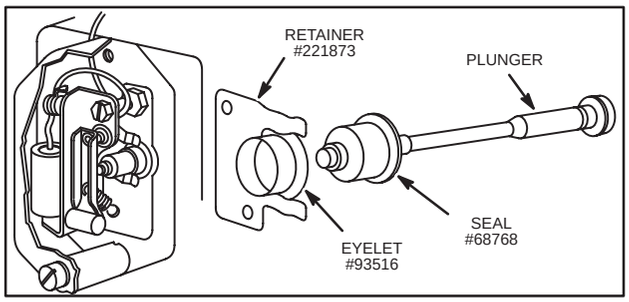

Fig. 58 – SEAL ASSEMBLY

Replace Point Plunger or Plunger Bushing

Two styles of plunger bushings have been used. Removal and installation is as follows:

Remove Style I Plunger Bushing

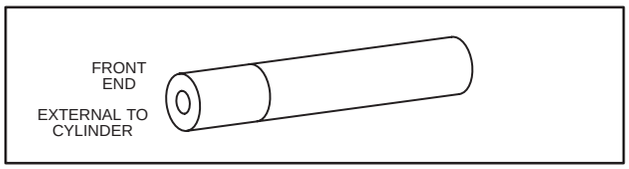

Fig. 59 – STYLE I BUSHING

Remove breaker box cover, condenser, and breaker assembly, Fig. 57. Pull breaker plunger out as far as possible. Use a pair of pliers to break plunger off as close to bushing as possible, Fig. 60, Ill. "A". Tap plunger bushing with a 1/4-20 tap or self-tapping screw, Part #93029 1/2 to 5/8" (13 to 16 mm) deep, Fig. 60, Ill. "B".

Use a 1/4-20 x 1/2" long hex head screw and two spacer washers, Fig. 60, Ill. "C" to pull bushing out of the cylinder. The bushing will be free when it has been pulled 5/16". (7.9 mm) CAREFULLY remove the bushing and broken plunger. DO NOT allow the plunger or chips to fall into the crankcase.

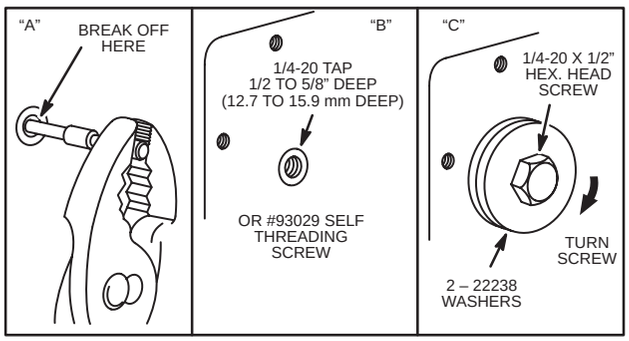

Fig. 60 – REMOVING BUSHING AND PLUNGER

Install Style I Bushing and Plunger

Insert plunger into new bushing, Fig. 61.

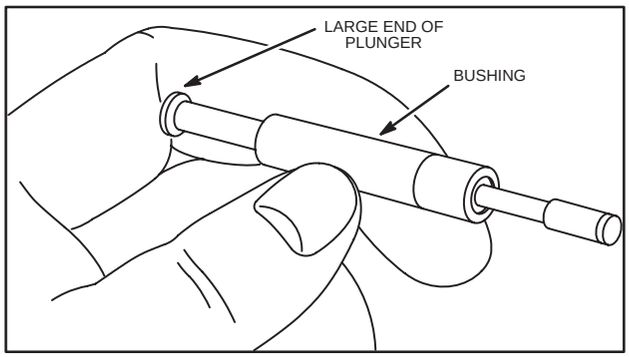

Fig. 61 – INSERTING NEW PLUNGER IN BUSHING

Insert plunger and bushing into cylinder. Use a hammer and the old bushing to drive new bushing into cylinder until bushing is flush with the face of the cylinder. Check for freedom of movement of the plunger, Fig. 62.

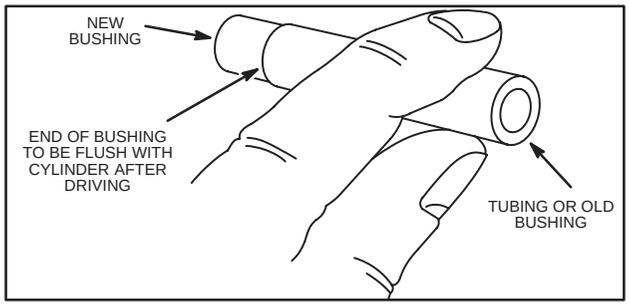

Fig. 62 – INSTALLING BUSHING AND PLUNGER

Remove Style II Bushing

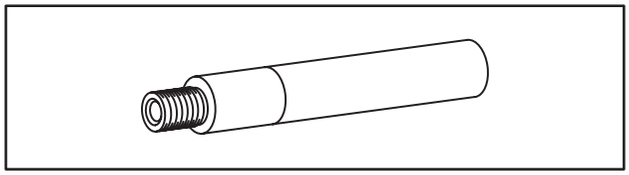

Fig. 63 – STYLE II BUSHING

Remove breaker box cover, condenser, and breaker assembly, Fig. 57. Place a thick 3/8" inside diameter washer, such as Part #22238, over the end of bushing and screw on a 3/8-24 nut, Fig. 64, Ill. A. Tighten nut to pull bushing. After the bushing has moved about 1/8", remove the nut and put on a second washer, Fig. 64, Ill. B. Reinstall nut and continue to turn nut until bushing is free.

IGNITION (cont'd)

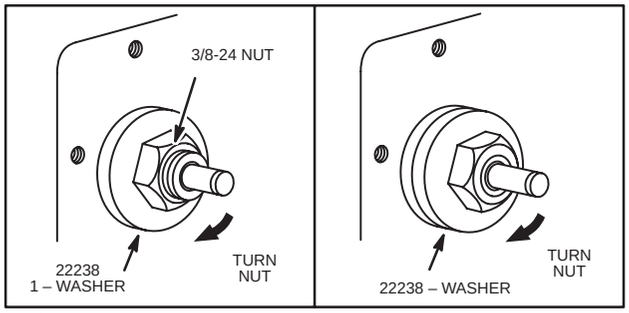

Fig. 64 – INSTALLING BUSHING AND PLUNGER

Install Style II Bushing and Plunger

Insert new plunger into bushing with large end of plunger opposite threads on bushing. Screw 3/8-24 nut onto threaded end of bushing to protect threads, Fig. 65.

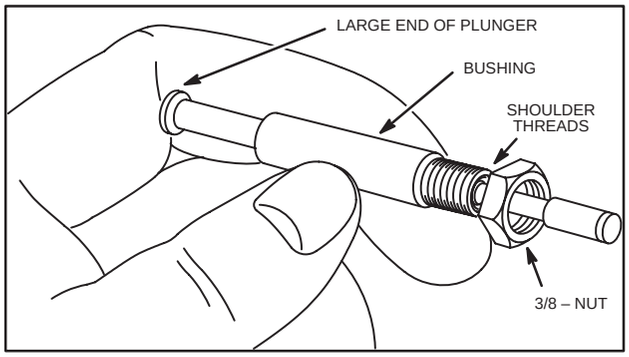

Fig. 65 – INSERTING PLUNGER INTO BUSHING

Insert bushing and plunger into cylinder. Use a piece of metal tubing or Part #295840 piston pin to drive bushing into cylinder. Drive bushing until square shoulder of bushing is flush with the face of cylinder, Fig. 66. Check to be sure that plunger moves freely.

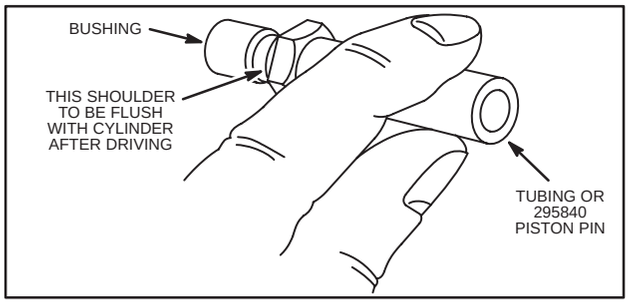

Fig. 66 – INSTALLING PLUNGER AND BUSHING

Assembly Condenser and Breaker Points

Install armature primary wire and condenser lead under terminal clamp and tighten screw. Note position of armature primary and condenser lead, Fig. 67.

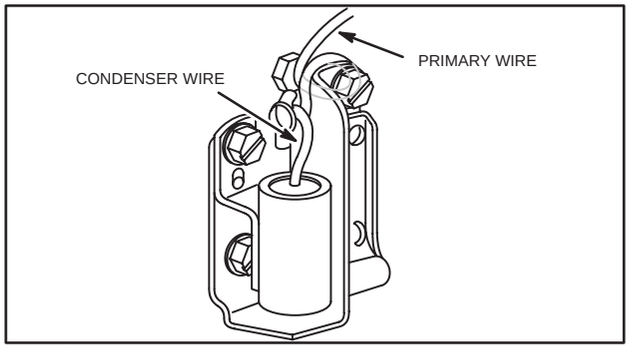

Fig. 67 – INSTALLING PRIMARY WIRE AND CONDENSER

Apply sealer, such as Permatex® or similar sealant, to adjusting screw and two mounting screws. Sealant prevents engine oil from leaking into breaker cover and onto points. On new breaker points, turn lock nut back until it contacts ferrule on breaker point bracket.

NOTE: On breaker points that are being reused, turn lock nut back until it contacts ferrule on breaker point bracket.

While holding adjusting screw, tighten nut against ferrule. This secures the adjustment screw to the breaker point bracket.

Install Breaker Point and Condenser Assembly

Place breaker assembly on engine and start adjustment screw. Install lower mounting screw through bracket and lower hole of seal retainer. Start upper mounting screw and then tighten lower mounting screw. Now tighten the upper mounting screw, Fig. 68.

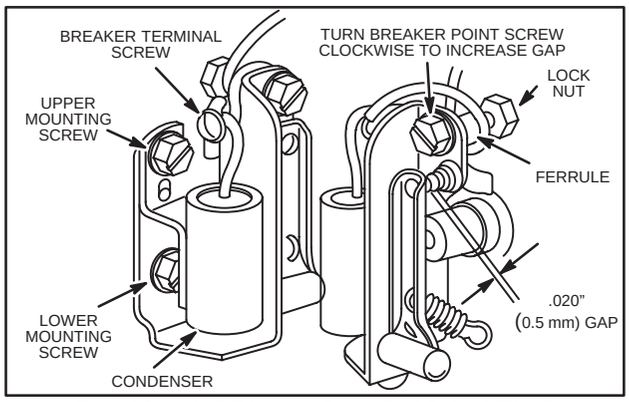

Fig. 68 – INSTALLING AND ADJUSTING BREAKER POINTS

IGNITION (cont'd)

Adjust Breaker Points

Turn crankshaft until breaker points are at their widest gap. Turn adjusting screw until point gap is .020". (0.51 mm) Tighten lock nut while holding adjustment screw, Fig. 68. Recheck point gap after tightening lock nut. Readjust as required.

Clean Breaker Points

Turn crankshaft until breaker points are closed. Open breaker points and insert a piece of lint-free paper and close points. Rotate paper using breaker points as a pivot point. Open breaker points and withdraw paper from breaker points. Removing paper with breaker points closed can tear paper and will leave dirt on the breaker points. Continue to clean breaker points until paper comes out clean.

Adjust Armature Timing Model 19D, 23D

Before armature can be timed, breaker points must be adjusted to .020" (0.51 mm) and the flywheel must be removed.

Slip flywheel onto crankshaft taper. Flywheel key must be only finger tight. Install flywheel nut finger tight, Fig. 69.

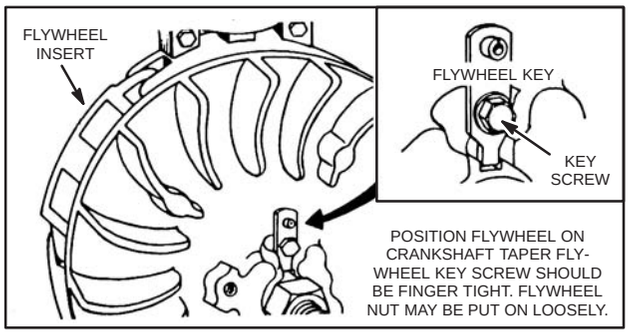

Fig. 69 – INSTALLING FLYWHEEL

Using Digital Multimeter, Tool #19357 or VOA meter, Tool #19236, set meter to ohms (Ω) zeroing meter if required, and connect test leads to breaker points, Fig. 70. Rotate flywheel clockwise with flywheel key driving the crankshaft until breaker points close (low ohms reading). Continue to turn flywheel until breaker points just start to open (high ohms reading), Fig. 71.

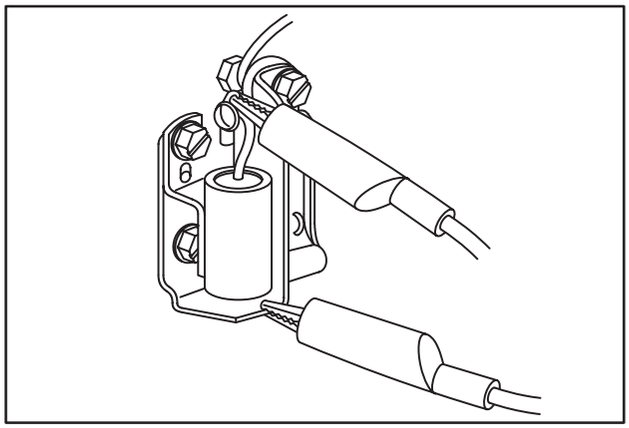

Fig. 70 – CONNECTING DIGITAL MULTIMETER #19357 OR VOA METER #19236

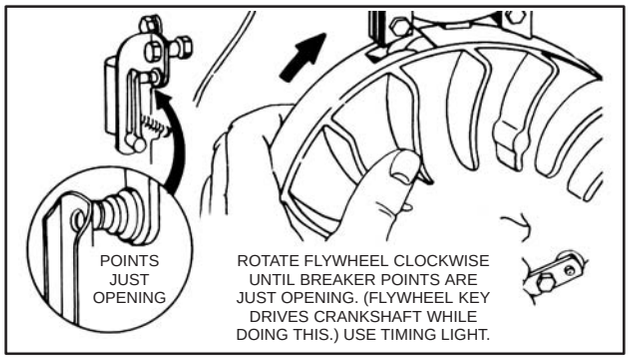

Fig. 71 – OPENING POINTS

While holding crankshaft from turning, rotate flywheel slightly counterclockwise until edge of flywheel magnet insert lines up with inside edge of armature laminations. Hold flywheel and tighten flywheel key screw, Fig. 72.

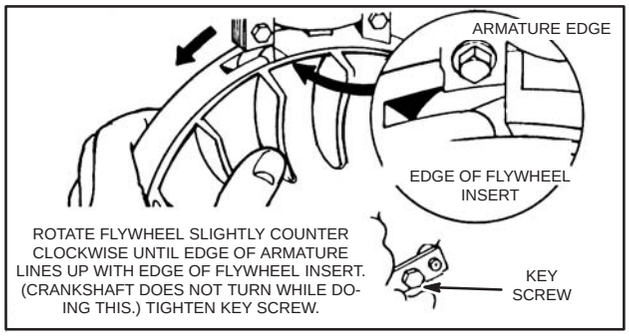

Fig. 72 – TIMING ARMATURE

Install Flywheel, Model Series 19D, 23D

Torque flywheel nut and set armature air gap to specifications listed in Table No. 7, page 3.

IGNITION (cont'd)

Adjust Ignition Armature Timing External Breaker Points Model Series 230000, 243400, 300000, 320000

NOTE: On breaker points equipped engines, before ignition armature can be timed, flywheel must be removed and breaker points must be adjusted to .020" (.51 mm).

1. Slide flywheel onto crankshaft taper.

2. Slip flywheel key into place.

3. Install flywheel nut finger tight.

4. Using Tool #19357 Digital Multimeter Meter, Fig. 73, set meter to ohms (Ω) and connect one test lead to breaker point primary lead.

5. Connect second test lead to breaker point mounting bracket.

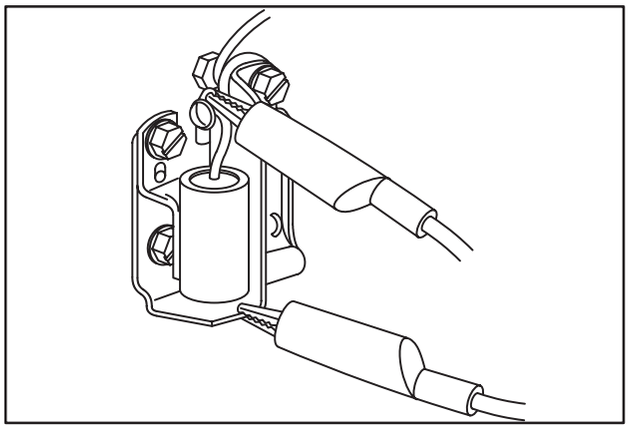

Fig. 73 – CONNECTING DIGITAL MULTIMETER #19357

6. Disconnect ignition armature ground wire from ignition armature laminations and pull wire away from laminations, Fig. 74.

7. Disconnect ignition armature ground wire from ignition armature laminations and pull wire away from laminations, Fig. 74.

8. Turn flywheel clockwise until meter shows points are closed (low ohms reading). Turn flywheel slowly clockwise until points open (high ohms reading). Arrow on flywheel should be in line with arrow on armature bracket, Fig. 74.

9. If arrows do not line up, remove flywheel without moving crankshaft. Loosen screws holding armature bracket until bracket can be moved with a slight drag. Slip flywheel back on crankshaft without moving crankshaft. Insert flywheel key. Install flywheel key and nut finger tight. Move armature bracket assembly until arrows line up, Fig. 74. Remove flywheel and tighten armature bracket screws.

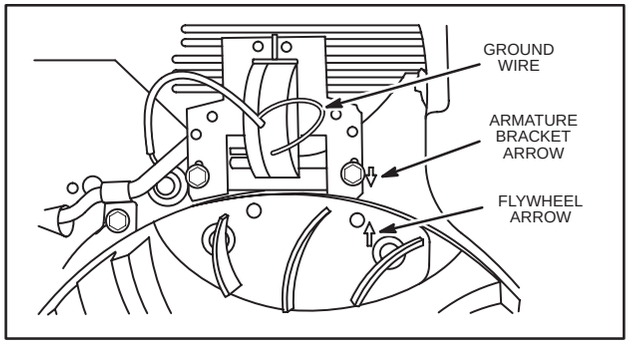

Fig. 74 – TIMING ARMATURE

Install Breaker Cover

Apply sealer such as Permatex® No. 2 at the opening on the breaker cover for the armature primary wire. This sealant is to prevent entry of dirt and moisture, Fig. 75.

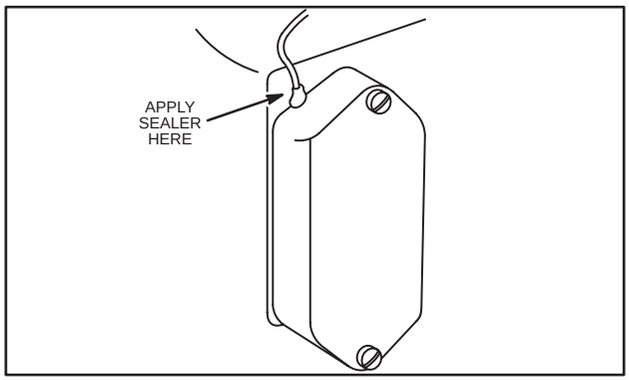

Fig. 75 – SEALING BREAKER COVER

IGNITION (cont'd)

MAGNETIZING FLYWHEEL AND ROTORS

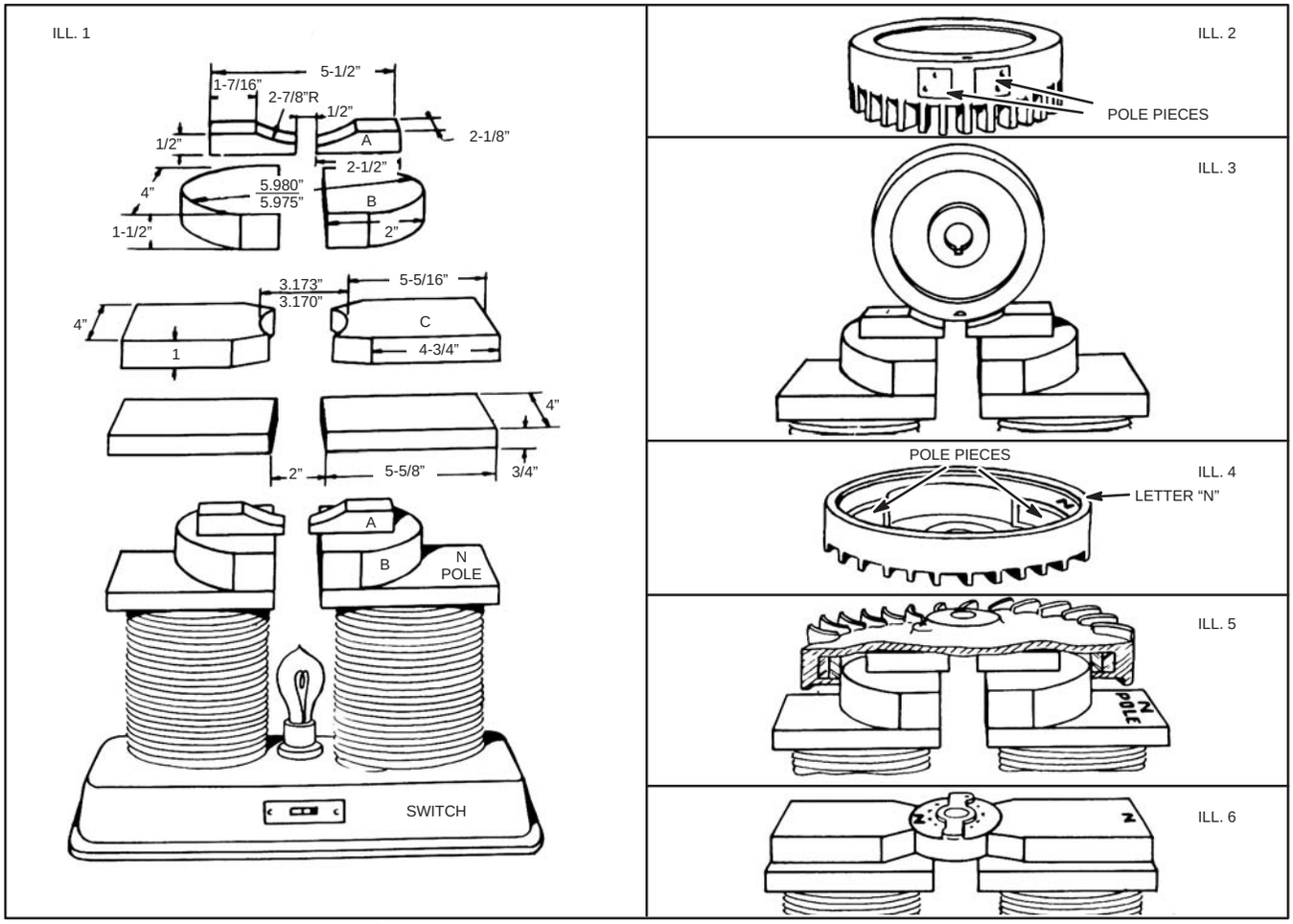

Fig. 76 – MAGNETIZING FLYWHEELS & ROTORS

Three (3) sets of pole pieces and two (2) plates on which to mount them should be made to the dimensions shown in Ill. 1, Fig. 76. The steel used for the pole pieces should be mad of a soft steel such as AISIC 1019. Dowels or screws can be used to hold pole pieces in place. A compass should be used to locate the poles on the charger.

Magnetize Flywheels Models 8 and All 2" Bore

Use pole pieces "A." Hold flywheel with pole pieces toward you and fins downward (Ill. 2, Fig. 76). The pole piece to the right should go on the pole of the charger that attracts the **NORTH** seeking end of the compass needle (Ill. 3, Fig. 76). Apply current twice for 3 seconds each with 1 second intervals.

Models A, B, FH, FI, FJ, M, K, L, M, PB, Q, R, S, T, W, Y, Z, ZZ

Use pole pieces "B." The pole of flywheel marked "N" should be placed on the pole of the charger which attracts the **NORTH** seeking end of the compass needle (Ill. 4, Fig. 76). Apply current twice for 3 seconds each with 1 second intervals (Ill. 5, Fig. 76).

Models 9, 14, 23, 23A, 191400, 231400

Use pole pieces "C." The pole of the rotor marked "N" should be placed on the pole of the charger which attracts the **SOUTH** seeking end of the compass needle (Ill. 6, Fig. 76). Apply current twice for 3 seconds each with 1 second intervals.

IGNITION (cont'd)

TABLE NO. 8
SPECIFICATIONS FOR ALUMINUM ENGINE MODELS

1. **Spark plug gap: .030" (.76 mm)**
2. **Condenser capacity: .18 to .24 M.F.D.**
3. **Breaker point gap: .020" (.50 mm)**

BASIC MODEL SERIES	IGNITION ARMATURE		FLYWHEEL PULLER TOOL NO.	FLYWHEEL HOLDER TOOL NO.	FLYWHEEL TORQUE
	TWO-LEG AIR GAP	THREE-LEG AIR GAP			
ALUMINUM CYLINDERS					
6B, 8B, 60000, 80000	.006"-.010" (.15-.25 mm)	.012"-.016 " (.30-.41 mm)	19069	19167 or 19372	55 Ft. Lbs.♦ (75 Nm)♦
90000, 110000	.006"-.010" (.15-.25 mm)		19069	19167 or 19372	55 Ft. Lbs.♦ (75 Nm)♦
100200, 100900, 130000, 140000	.010"-.014" (.25-.36 mm)	.012"-.016 " (.30-.41 mm)	NONE	19372	65 Ft. Lbs.♦ (88 Nm)♦
170000, 190000	.010"-.014" (.25-.36 mm)	.012"-.016 " (.30-.41 mm)	19165	19372	65 Ft. Lbs.♦ (88 Nm)♦
220000, 250000*	.010"-.014" (.25-.36 mm)		19203●*	19372	65 Ft. Lbs.♦ (88 Nm)♦

♦ Use 19244 starter clutch wrench on rewind starter engines.

● Use 19203, Flywheel Puller, on Model Series 250000 built after 1975 and all Model Series 220000.

* Use 19165, Flywheel Puller, on Model Series 250000 built 1975 and before.

1. Breaker point ignition, using either internally or externally mounted breaker points, ignition armature and flywheel, Fig. 77.

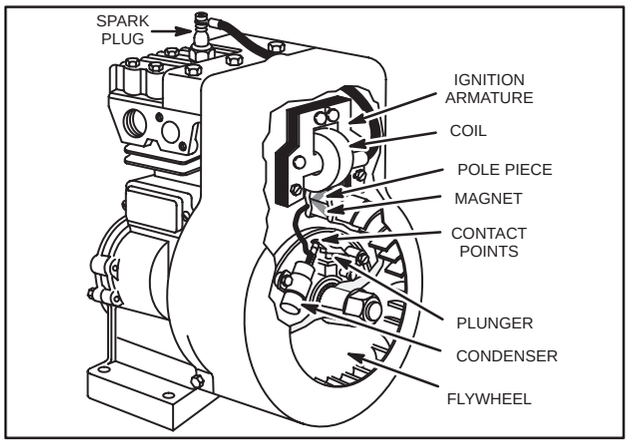

Fig. 77 – BREAKER POINT IGNITION

2. Magnavac ignition, using magnetically actuated sealed points, ignition armature and flywheel, Fig. 78.

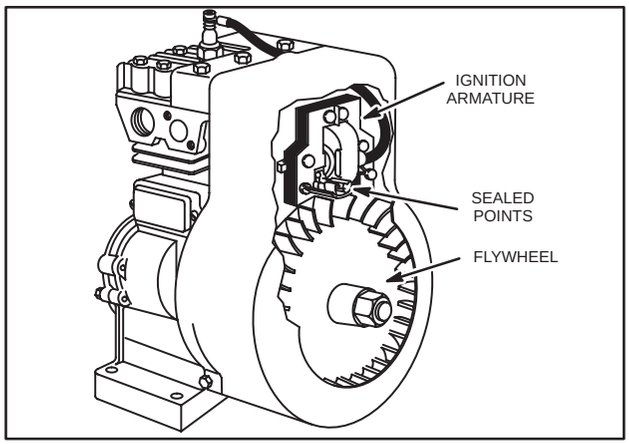

Fig. 78 – MAGNAVAC IGNITION

IGNITION ARMATURE AND CONDENSER TESTING 9

All Models

Use an approved tester to test armatures and condensers. Specifications are supplied by the tester manufacturer or refer to MS-7862, Testing Briggs & Stratton Ignition Coils.

IGNITION (cont'd)

REMOVE FLYWHEEL

All Aluminum Model Series <u>except</u> those listed in NOTE below

NOTE: Aluminum Series 80000 (with cast iron flywheel) 100200, 100900, and 130000 flywheels are removed using different procedures. These Model Series will be described separately.

Remove Flywheel Nut or Rewind Starter Clutch

On flywheels 6-3/4" in diameter or less, use Tool #19167 or #19372, Flywheel Holder, to hold flywheel from turning, Fig. 79.

Use Tool #19244, Starter Clutch Wrench, to remove rewind starter clutch.

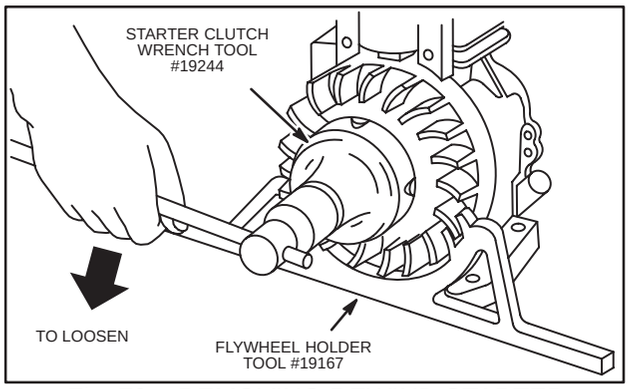

Fig. 79 – REMOVING REWIND STARTER CLUTCH

For flywheels larger than 6-3/4" (171.00 mm) in diameter, use Tool #19372, Flywheel Holder, Fig. 80.

NOTE: DO NOT use fins on magnet insert to prevent flywheel from turning.

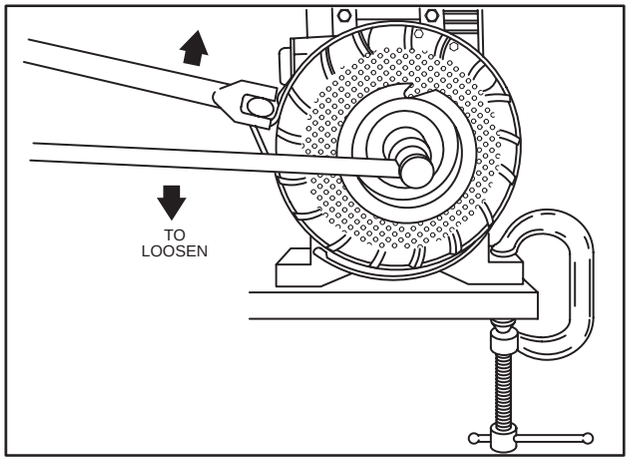

Fig. 80 – REMOVING FLYWHEEL NUT, LARGE FLYWHEELS

Remove Flywheel

Refer to Table No. 1 for correct flywheel puller by Model Series.

Use flywheel nut to protect crankshaft threads and for puller to bear against, Fig. 81.

Thread flywheel nut onto crankshaft until top of nut is flush with crankshaft threads or slightly above end of threads.

See Fig. 81 for pulling procedure.

NOTE: Care is required not to damage flywheel fins, magnets or ring gear, Fig. 81.

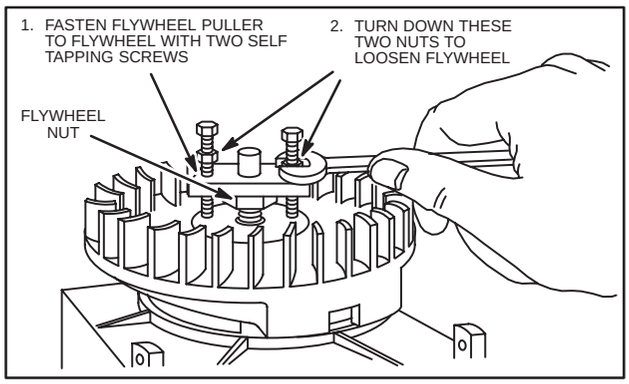

Fig. 81 – REMOVING FLYWHEEL

Cast Iron Flywheel, Model Series 80000, 100200, 100900, 130000

Support flywheel with a gloved hand or a shop rag while exerting an upward pull.

Strike outside rim of flywheel with a **RAWHIDE HAMMER** using a sharp blow.

IGNITION (cont'd)

Several blows may be required on a tight or rusted flywheel.

DO NOT STRIKE MAGNETS OR FINS.

Inspect – Flywheel Key, Flywheel And Crankshaft Keyways

Inspect flywheel key for partial or complete shearing. If sheared, replace. Inspect flywheel and crankshaft keyways for damage. If damaged, replace with new parts.

Install Flywheel Nut or Rewind Starter Clutch

1. Install fan retainer or rotating screen cup (when used), then flat or Belleville washer, and flywheel nut, shoulder screw, or rewind starter clutch.

2. When installing Belleville washer assemble with hollow side toward flywheel.

3. Use tools as listed in Table No. 8, Page 25 or clamp engine to work surface and torque nut or rewind starter clutch to specifications listed in Table No. 8, Page 25.

NOTE: DO NOT use a steel key under any circumstances Use only genuine replacement flywheel keys.

FLYWHEEL MAGNETO IGNITION BREAKER POINTS – INTERNAL

Remove Breaker Cover

Care should be taken when removing breaker cover, to avoid damaging cover. If cover is bent or damaged, it should be replaced to ensure a proper dust seal.

Breaker Point Identification

Three styles of internal breaker points are described for engines covered by this manual, Fig's. 82, 83, and 84.

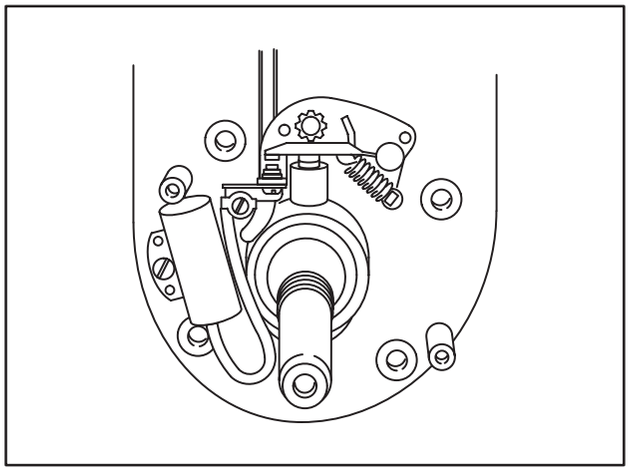

Fig. 82 – STYLE I ALUMINUM MODEL SERIES 140000, 170400, TYPE NOS. 0010 THROUGH 0271, 170700 BEFORE CODE NO. 6906251

Remove Style I Breaker Points . . . . . Page 28
Install Style I Breaker Points . . . . . Page 28
Adjust Style I Breaker Points . . . . . Page 28

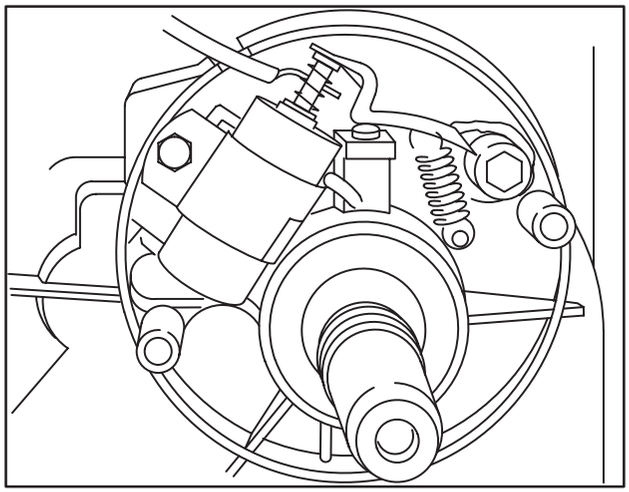

Fig. 83 – STYLE II – ALUMINUM MODEL SERIES EXCEPT THOSE LISTED FOR STYLE II

Remove Style II Breaker Points . . . . . Page 29
Install Style II Breaker Points . . . . . Page 30
Adjust Style II Breaker Points . . . . . Page 31

IGNITION (cont'd)

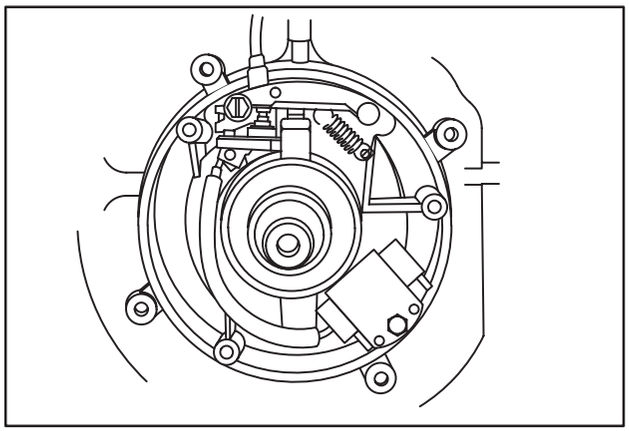

Fig. 84 – STYLE III – MODEL SERIES 250000

Remove Style III Breaker Points . . . . . Page 29

Install Style III Breaker Points . . . . . Page 31

Adjust Style III Breaker Points . . . . . Page 31

Breaker Points

Breaker point gap is .030" (.50 mm) on all models. Breaker points should be checked for contact and for signs of burning or pitting. Points gapped too wide will advance spark timing and may cause kickback when starting. Points gapped too close will retard spark timing and decrease engine power.

Remove Style I Breaker Points

Loosen screw on breaker point assembly and remove armature primary wire and condenser wire, Fig. 85. Remove screw holding breaker point to armature plate and remove points.

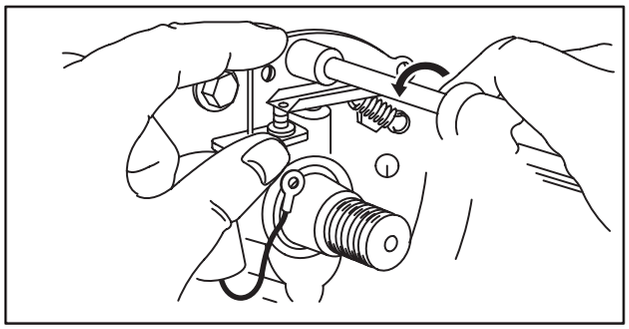

Fig. 85 – REMOVING STYLE II BREAKER POINTS

Install Breaker Points

To assemble, place the varnished insulator used with the new style points beneath the point bracket, Fig. 86.

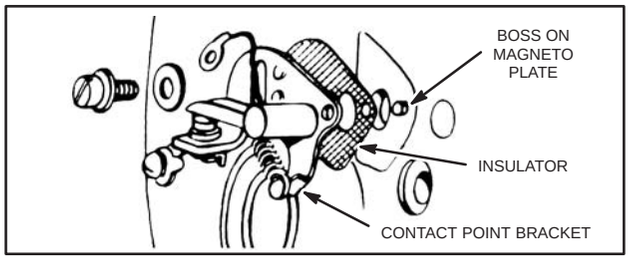

Fig. 86 – REPLACING BREAKER POINTS

Place armature wire and condenser wire under wire terminal, Fig. 87. Note position of wires. Install breaker point set on engine with cast boss in plate entering hole in point set, Fig. 87.

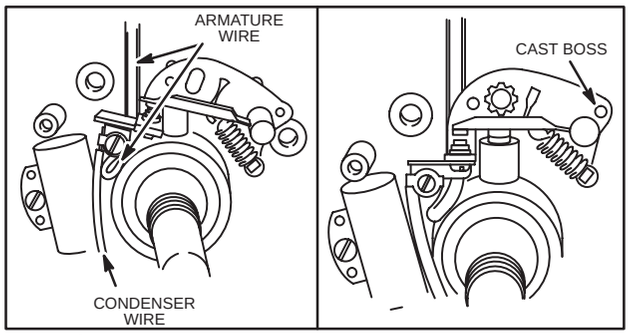

Fig. 87 – INSTALLING STYLE II BREAKER POINTS

Adjust Style I Breaker Points

Turn crankshaft until breaker points are at their widest gap. With mounting screw finger tight, move point bracket until breaker points are gapped .020" (0.51 mm) wide, Fig. 88. Tighten mounting screw and recheck point gap.

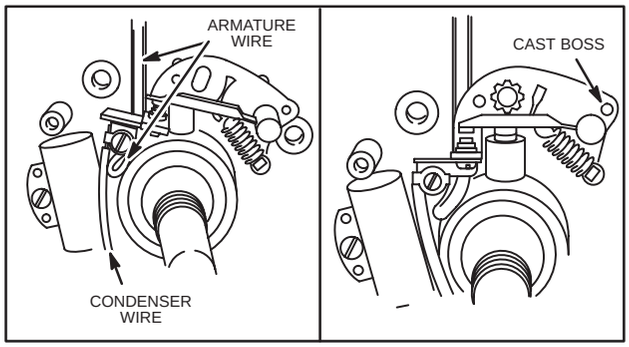

Fig. 88 – ADJUSTING STYLE I BREAKER POINTS

IGNITION (cont'd)

Remove Style II Breaker Points

Remove condenser clamp screw and clamp, Fig. 89.

Lift condenser and wires away from cylinder. Compress condenser spring to remove stop switch wire and armature primary wire, Fig. 90. The tip of the condenser is one-half of the breaker points.

Remove post mounting screw to remove post, breaker spring and moveable point, Fig. 89.

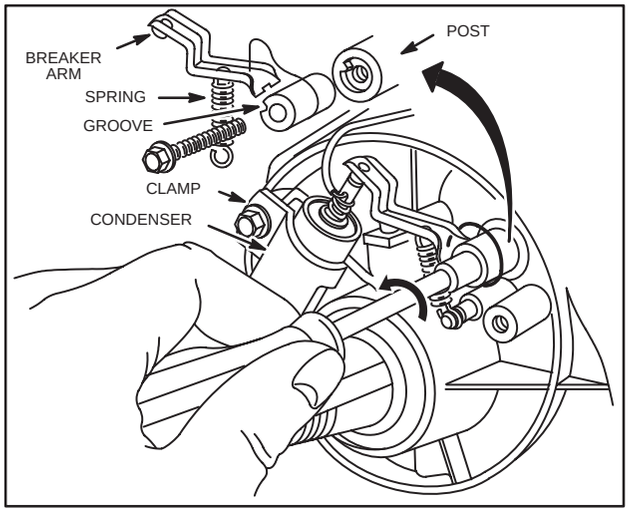

Fig. 89 – REMOVING STYLE II BREAKER POINTS

NOTE: Early style condensers had a threaded condenser post. Remove nut and washer.

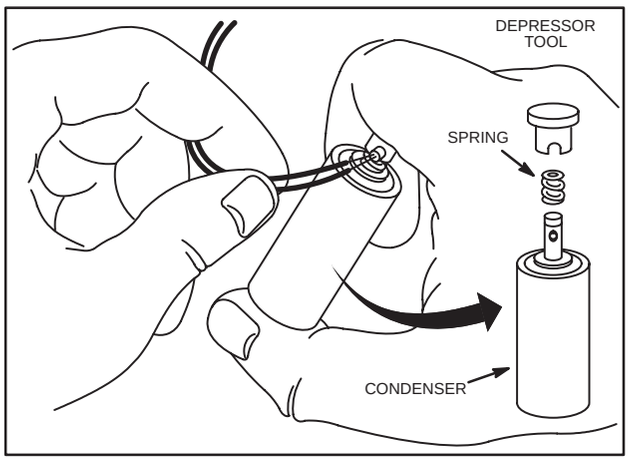

Fig. 90 – REMOVING OR INSTALLING WIRES ON CONDENSER

Remove Style III Breaker Points

1. Remove screw holding breaker assembly to cylinder block, Fig. 91.
2. Turn breaker points over and loosen screw holding ignition armature primary wire and condenser wire.
3. Remove wires.

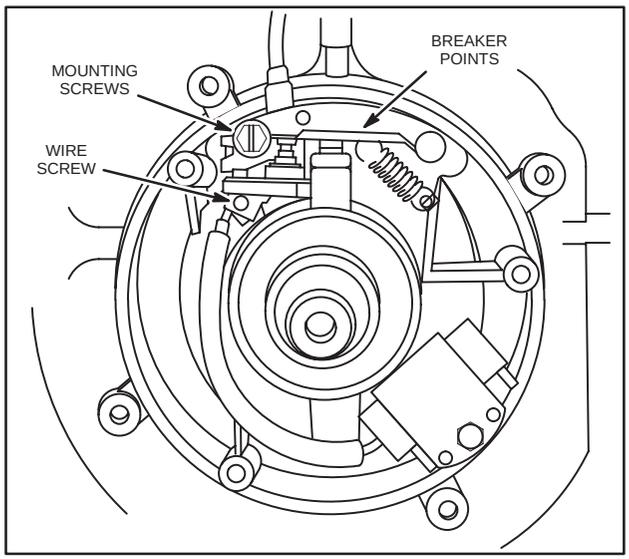

Fig. 91 – REMOVING STYLE III BREAKER POINTS

Check Breaker Point Plunger Hole

A worn breaker point plunger hole can cause oil to leak past the plunger and contaminate the breaker points causing the points to burn.

To check for plunger hole wear, remove breaker points and plunger.

If flat end of Tool #19055, Plug Gauge, will enter plunger hole for a distance of 1/4" (6.4 mm) or more, the hole should be rebushed, Fig. 92.

NOTE: When breaker point plunger hole is worn beyond reject, installing Magnetron® on two leg armatures can be done on aluminum cylinder engines equipped with two (2) legged armatures instead of rebushing breaker point plunger hole. However, if breaker points and plunger are removed, plunger hole must be plugged using P/N 231143 which can be ordered through your normal source of supply.

IGNITION (cont'd)

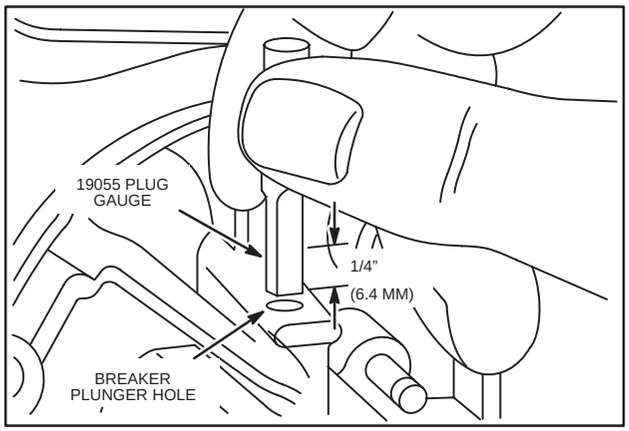

Fig. 92 – CHECKING BREAKER POINT PLUNGER HOLE

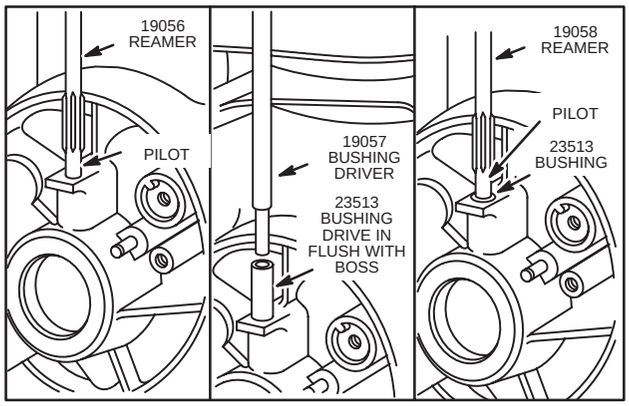

Fig. 93 – INSTALLING BREAKER POINT BUSHING

Rebush Breaker Point Plunger Hole

Remove breaker points, armature, crankshaft, and breaker point plunger.

Use Tool #19056, Counterbore Reamer, to hand ream worn plunger hole, Fig. 93.

Keep reamer in alignment with plunger hole.

NOTE: Crankshaft must be removed.

Drive service bushing, Part No. 23513, with Tool #19057, Bushing Driver, until upper end of bushing is flush with the top of the boss, Fig. 93.

Use Tool #19058, Finish Reamer, to hand ream the new bushing.

Keep reamer in alignment with bushing and plunger hole.

Remove all reaming chips and dirt.

Check Breaker Point Plunger

Replace breaker point plunger if worn to .870" (22.10 mm) or less. Insert plunger with groove towards breaker points or oil will enter breaker point box, Fig. 99.

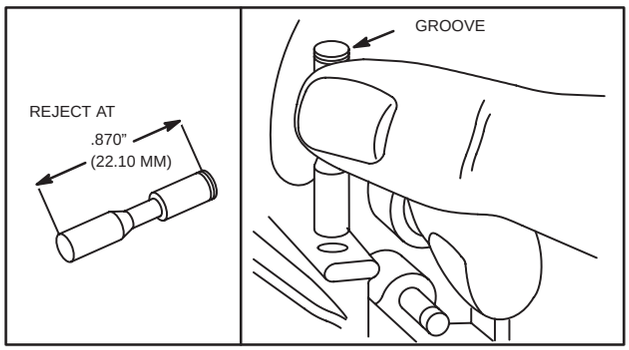

Fig. 94 – CHECKING PLUNGER BORE

INSTALL BREAKER POINTS

Install Style II Breaker Points

Install breaker point plunger, Fig. 99.

Install post into recess of cylinder with groove of post in notch of recess, Fig. 95. Note position of braided wire.

Tighten mounting screw securely.

Hook open loop of breaker spring into two holes of breaker arm, Fig. 95, and then hook closed loop of spring over spring post and into groove of post.

IGNITION (cont'd)

Push flat of breaker arm toward groove in mounting post until flat engages groove.

Compress spring on condenser and slip armature primary wire (and stop switch wire, if used) into hole of condenser post.

Release spring to clamp wire(s). Lay condenser into cylinder recess and install clamp and screw securely, Fig. 95.

NOTE: On early style threaded post condensers install wire(s), eyelet(s), washer and nut.

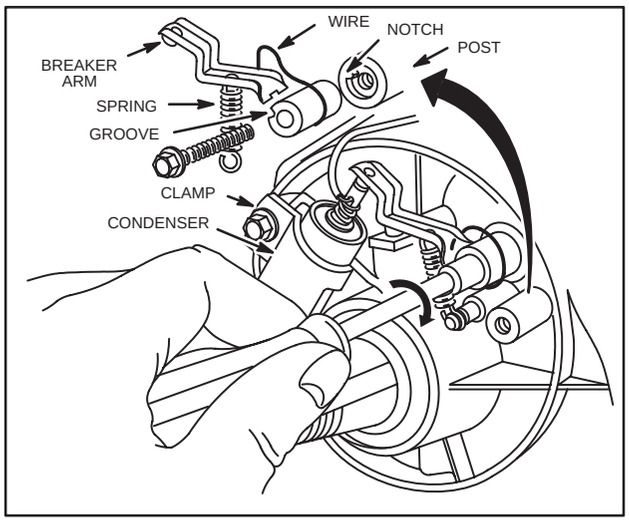

Fig. 95 – INSTALLING STYLE II BREAKER POINTS

Adjust Breaker Point Gap

Turn crankshaft until breaker points open to their widest gap.

Adjust Style II Breaker Points

With a screwdriver, move condenser back and forth until breaker points are gapped .020" (.50 mm) wide, Fig. 96.

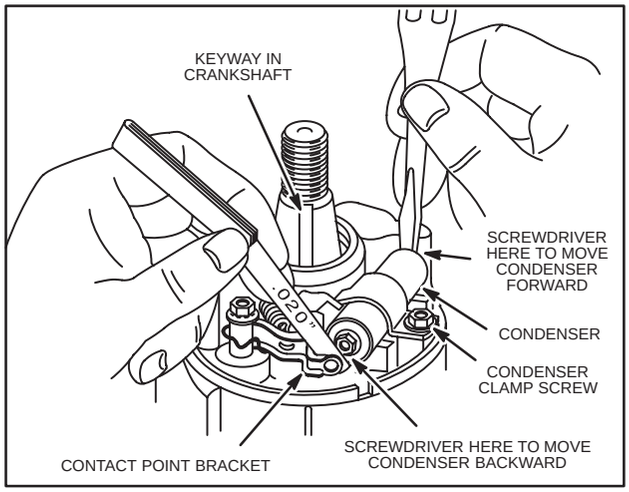

Fig. 96 – ADJUSTING STYLE II BREAKER POINTS

Install and Adjust Style III Breaker Points

1. Install ignition armature primary wire in slot of insulation with end of wire under clamp and wire from condenser under clamp on breaker point set, Fig. 97. Note position of wires.
2. Place screw through eyelet of stop switch wire and install screw and eyelet on breaker point set terminal. Note position of eyelet.
3. Tighten screw while holding wires in correct position.
4. Install breaker point plunger in plunger hole, Fig. 99.
5. Place breaker set on cylinder with pin in hole of breaker set, Fig. 97.
6. Tighten screw finger tight.

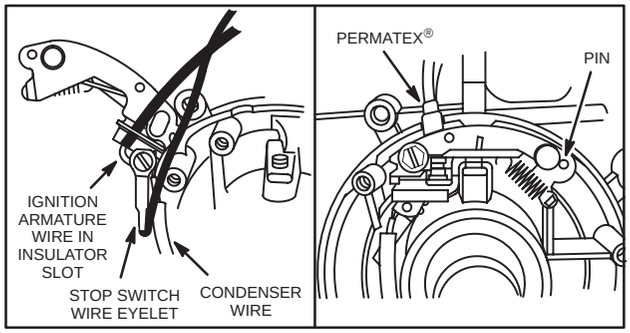

Fig. 97 – INSTALLING STYLE II BREAKER POINTS

IGNITION (cont'd)

Breaker Point Cover

The breaker point cover protects the breaker points from dirt and moisture. The opening for the armature primary wire (and stop switch wire, when used) should be sealed with Permatex® or similar sealant to prevent dirt and moisture from entering breaker box, Fig. 98. Distorted covers will not seal around the outer edge and should be replaced.

NOTE: Engines used in winter applications use vented breaker covers. Refer to "Illustrated Parts List" for part numbers.

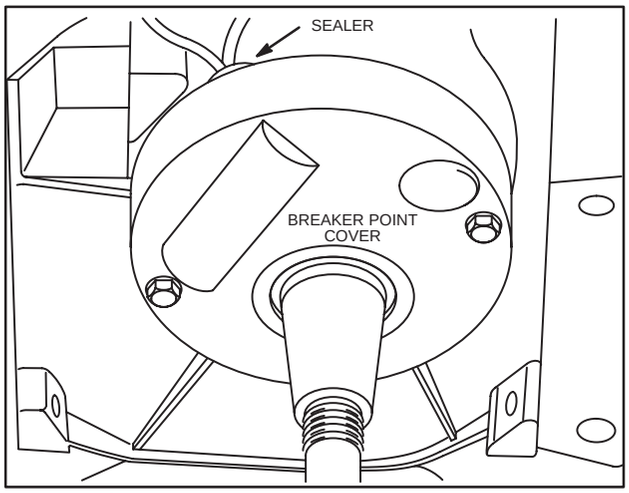

Fig. 98 – INSTALLING AND SEALING BREAKER COVER (TYPICAL)

Replace breaker point plunger if worn to .870" (22.09 mm) or less. Insert plunger with groove towards breaker points or oil will enter breaker point box, Fig. 99.

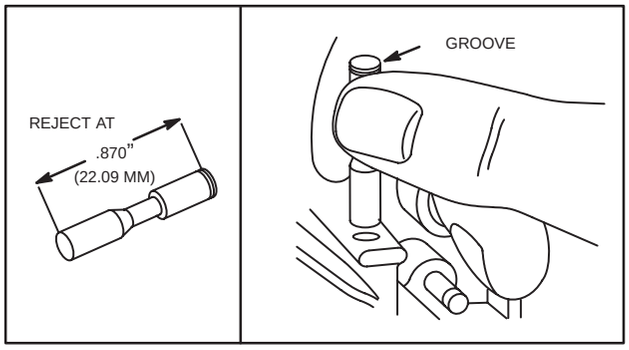

Fig. 99 – CHECKING BREAKER POINT PLUNGER HOLE

INSTALL IGNITION ARMATURES

Install Ignition Armatures, Pneumatic Governor System

1. Install ignition armature and air vane, when used. The mounting holes of the ignition armature are slotted.
2. Push ignition armature away from flywheel as far as possible and tighten one mounting screw, Fig. 100.

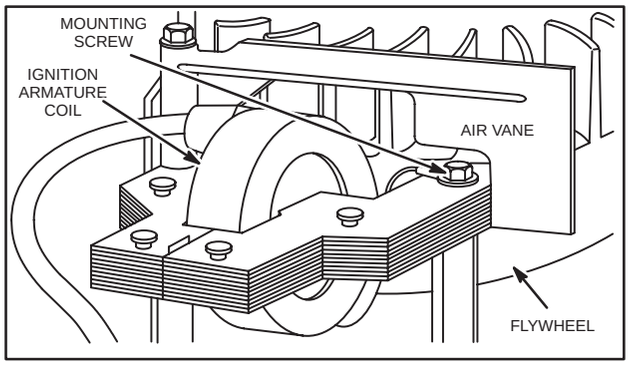

Fig. 100 – INSTALLING IGNITION ARMATURE AND AIR VANE, (TYPICAL)

Install Ignition Armature, Mechanical Governors

1. Install ignition armature and air guide. The mounting holes of the ignition armature are slotted.
2. Push ignition armature away from flywheel and tighten one screw, Fig. 101.

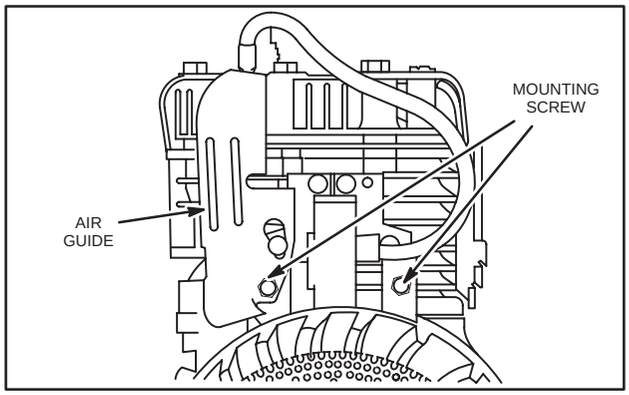

Fig. 101 – INSTALLING IGNITION ARMATURE AND AIR GUIDE

IGNITION (cont'd)

MAGNAVAC IGNITION

Remove Magnavac Ignition Armature

Removal of the flywheel is not required to remove Magnavac ignition armatures except to inspect flywheel key and keyway on crankshaft and flywheel. Remove ignition armature mounting screws and lift off ignition armature. Disconnect stop switch wire by using a 5/32" (3.9 mm) diameter pin punch to depress spring and retainer, Fig. 102.

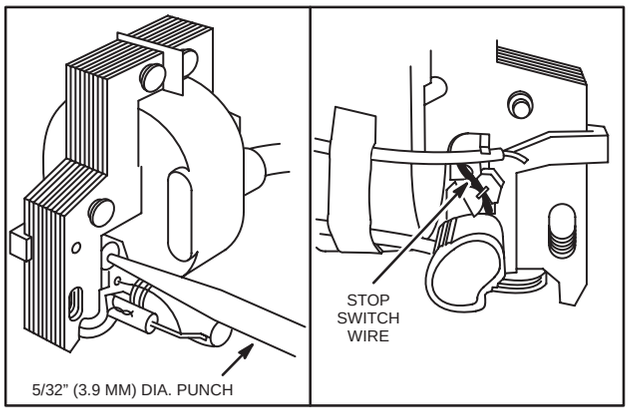

Fig. 102 – REMOVING STOP SWITCH WIRE

Adjust Ignition Armature Air Gap

Two styles of ignition armatures have been used. Style I is the three leg style and Style II is the two leg style, Fig. 103.

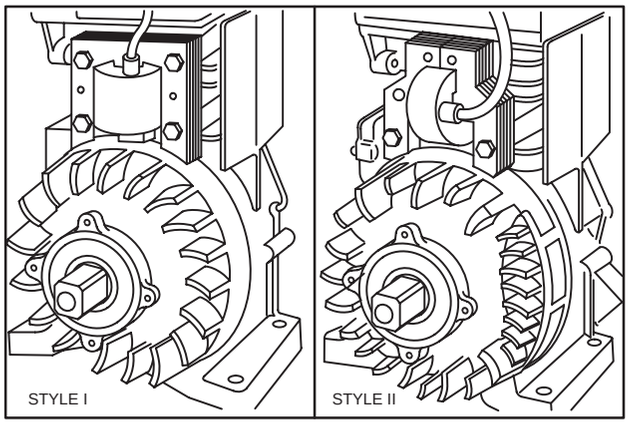

Fig. 103 – TYPES OF IGNITION ARMATURES

1. Ignition armature air gaps are found in Table No. 8, page 25 for Styles I and II.
2. With ignition armature away from flywheel as far as possible and one screw tightened, turn flywheel so magnets are away from ignition armature.
3. Place the proper thickness gauge between rim of flywheel and laminations of the ignition armature.
4. While holding gauge, turn flywheel until magnets are directly under laminations.
5. Loosen the one screw holding ignition armature and let magnets pull ignition armature down against flywheel.
6. Tighten both mounting screws.
7. Rotate flywheel until gauge is free, Fig. 104.

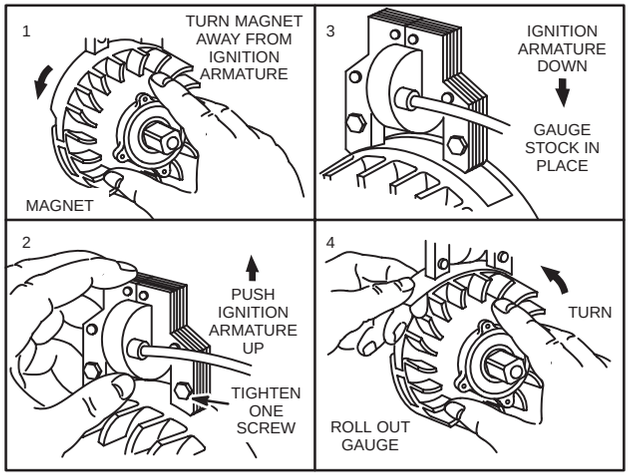

Fig. 104 – ADJUSTING IGNITION ARMATURE AIR GAP

STOP SWITCH IDENTIFICATION

Stationary, rotary, toggle, and key stop switches are used to meet various equipment needs, Fig. 105.

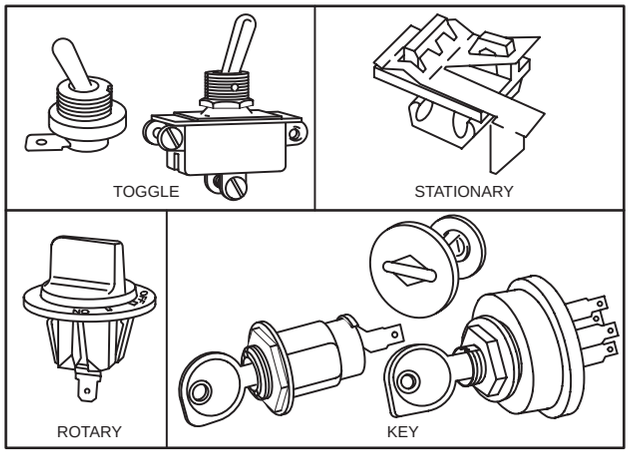

Fig. 105 – TYPES OF STOP SWITCHES

Rotary & Stationary Switches

Check Stationary Stop Switch . . . . . Page 34

Check Rotary Stop Switch . . . . . Page 34

IGNITION (cont'd)

Stationary, rotary, toggle, and key stop switches are used to meet various equipment needs, Fig. 105.

Toggle Switches

Check Single Terminal Switch . . . . . Page 34

Check Multiple Terminal Switch . . . . . Page 34

KEY SWITCHES

Check Metal Key Switch (single terminal) . . Page 35

Check Metal Key Switch (5 or 6 terminals) . . Page 35

Check Switch with Plastic Key . . . . . Page 36

Stationary Stop Switch

Stationary stop switches are located on fuel tank brackets, governor control brackets, cylinder head brackets, System 2® and System 4® band brake control brackets, and brake shoe on Model Series 100700, 120000.

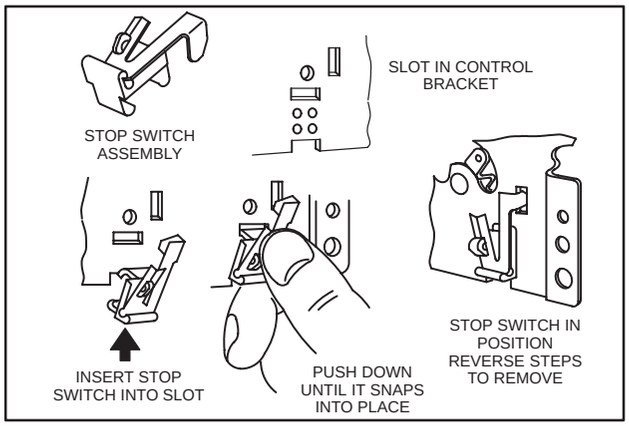

Fig. 106 – TYPICAL STOP SWITCH INSTALLATION

Rotary Stop Switch Check

1. Remove blower housing from engine and disconnect stop switch wire from switch.
2. Using Tool #19357, Digital Multimeter, set meter to ohms (Ω) and connect test leads to blower housing and to stop switch terminal, Fig. 107.
3. With switch in "OFF" position there should be continuity.
4. Turn switch to "ON" position and there should be no continuity.
5. Replace switch if there is no continuity in both "ON" and "OFF" positions or there is continuity in both positions and check stop switch wire for damage.

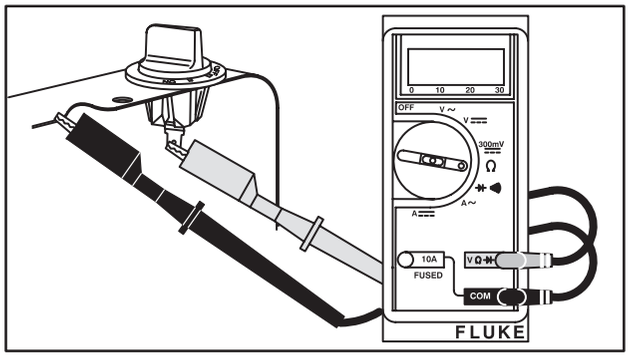

Fig. 107 – CHECKING ROTARY STOP SWITCH

Toggle Switches

Two styles of toggle switches have been used, single terminal and multiple terminals.

Single Terminal Toggle Switch Check

1. Disconnect stop switch wire from spade terminal.
2. Using Tool #19357, Digital Multimeter, set meter to ohms (Ω) and connect test leads to spade terminal and to switch mounting surface.

NOTE: Mounting surface must be free of paint, rust or dirt.

3. With switch in "OFF" position there should be continuity.
4. Move switch to "ON" position. There should be no continuity, Fig. 108.

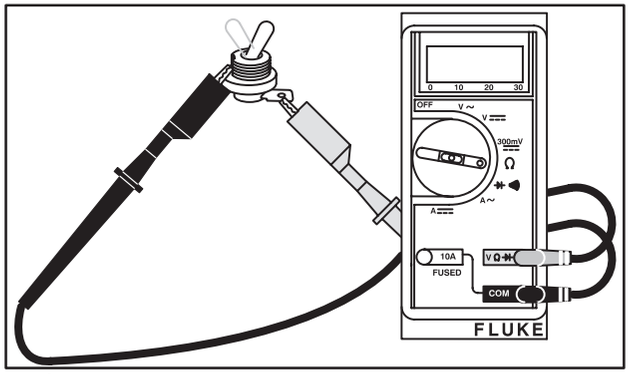

Fig. 108 – CHECKING TOGGLE STOP SWITCH

Multiple Terminal Toggle Switch Check

1. Disconnect all wires from switch marking each wire for correct reinstallation.
2. Using Tool #19357, Digital Multimeter, set meter to ohms (Ω) and connect test leads to either center terminal and a terminal on either end of switch on the same side as the center terminal.

IGNITION (cont'd)

Stationary, rotary, toggle, and key stop switches are used to meet various equipment needs, Fig. 105.

3. If meter shows continuity move switch to other position and the reading should not show continuity, Fig. 109.

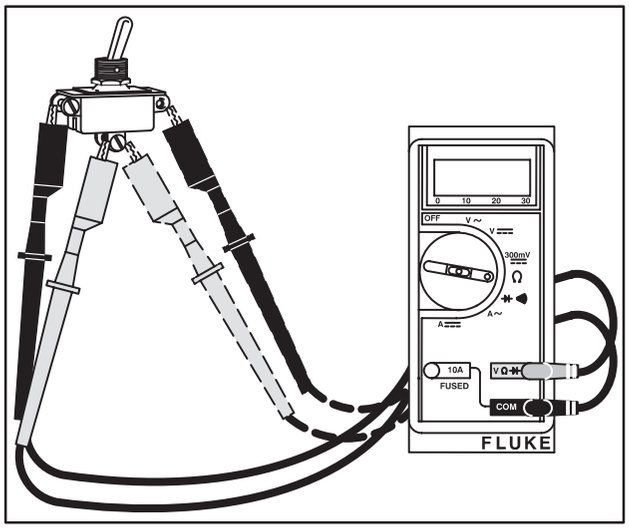

Fig. 109 – CHECKING MULTIPLE TERMINAL SWITCH

4. Move tests lead from end terminal to other end terminal and repeat tests. Test results should be the opposite of first tests, Fig. 109.

5. Repeat tests for terminals on other side of switch. If there is continuity in both switch positions or no continuity in either switch position, replace switch and check stop switch wire for damage.

Key Switches

Three styles of key switches have been used, metal key (with single terminal), metal key (with five or six terminals), and plastic key.

Metal Key Switch Check – Single Terminal

1. Disconnect stop switch wire from spade terminal. Using Tool #19357, Digital Multimeter, set meter to ohms (Ω) and connect test leads to spade terminal and to switch mounting surface.

NOTE: Surface must be free of paint, rust and dirt.

2. With key in "OFF" position there should be continuity.

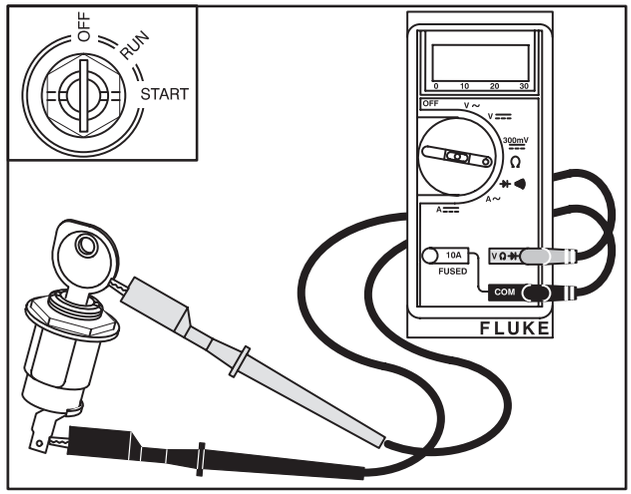

Fig. 110 – CHECKING METAL KEY SWITCH

Metal Key Switch Check – Five or Six Terminals

The five or six terminal key switch can be checked for continuity using Tool #19357 Digital Multimeter.

With meter selector switch in Ω position, and test leads attached to switch terminals, a low meter reading indicates continuity (complete circuit). An incomplete circuit (open circuit) will be displayed as "OL."

1. Insert red test lead into **V** Ω ⊣⊢ receptacle in meter.
2. Insert black test lead into **COM** receptacle in meter.
3. Rotate meter selector to Ω position.
4. Meter must indicate continuity between terminals with keyswitch in position shown. See number sequence of terminals shown in Fig. 111.

NOTE: On five terminal switches, continuity between terminals is the same as the six terminal switch for each position. EXAMPLE: OFF 1+3

NOTE: Terminals 1, 3 and 6 are grounded to keyswitch case. Meter must also indicate continuity between terminals and keyswitch case in "OFF" position.

When testing "RUN" and "START" terminals, meter should show continuity between terminals, with key switch in position shown.

IGNITION (cont'd)

Stationary, rotary, toggle, and key stop switches are used to meet various equipment needs, Fig. 105.

NOTE: The #2 and #5 terminals should show continuity in both the "RUN" and "START" position.

Switch Position	Continuity
1. OFF	1+3+6
2. RUN	2+5+6
3. START	2+4+5

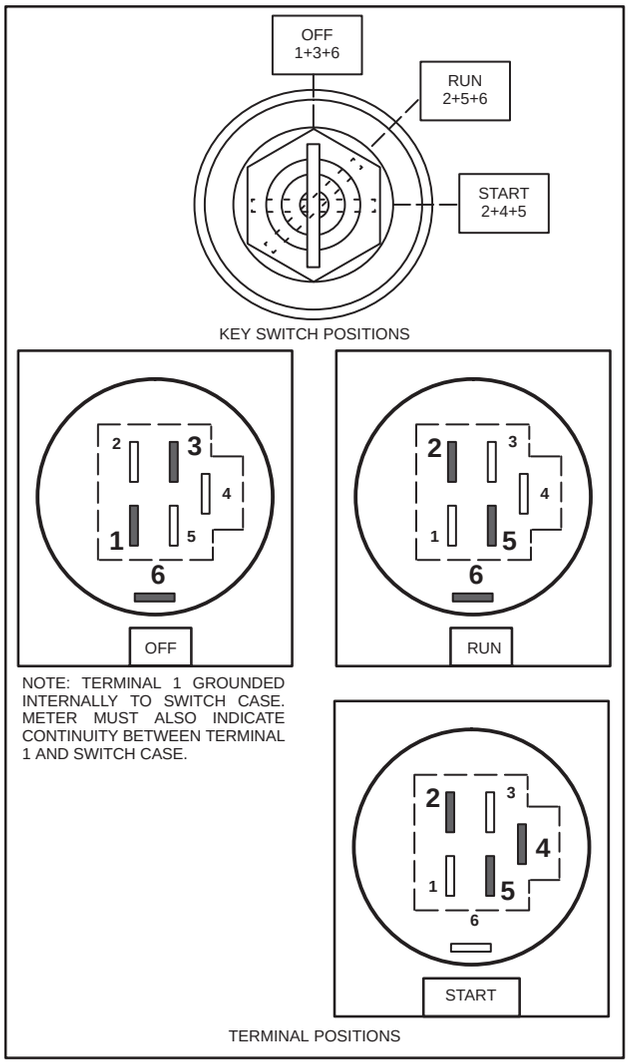

Fig. 111 – TESTING KEYSWITCH

Switch with Plastic Key Check

1. Disconnect stop switch wire from spade terminal. Using Tool #19357, Digital Multimeter, set meter to ohms (Ω) and connect test leads to spade terminal and to switch mounting surface.

NOTE: Mounting surface must be free of paint, rust and dirt.

2. With key pushed all the way in there should be no continuity.

3. Pull key out and there should be continuity, Fig. 112.

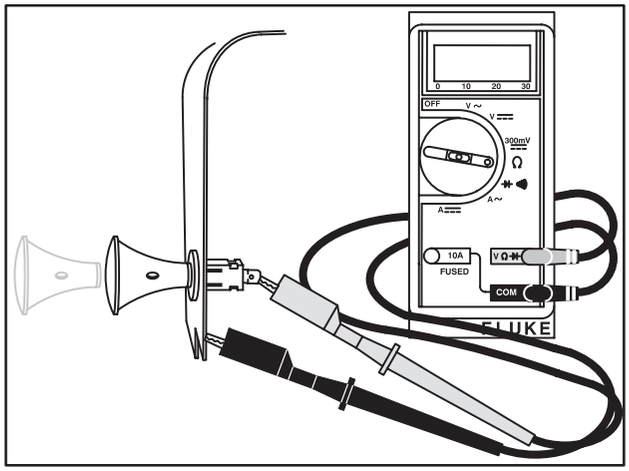

Fig. 112 – CHECKING SWITCH WITH PLASTIC KEY

STOP SWITCH WIRE, ALL MODELS

Stop Switch Wire Check

1. Using Tool #19357, Digital Multimeter, set meter to ohms (Ω) and connect one test lead to end of stop switch wire.

2. Connect other test lead to engine ground. There should be continuity.

3. Move wire back and forth and up and down.

4. If readings change, repair or replace damaged wire.

Section 3
AIR CLEANERS, CARBURETORS & GOVERNORS

WARNING: DO NOT clean filters with gasoline. Use a cleaning fluid specified for this purpose.

An air cleaner, properly serviced, protects the internal parts of the engine from dust particles in the air. If the air cleaner instructions are not carefully followed, dirt and dust which should be collected in the cleaner will be drawn into the engine and become a part of oil film. This results in an abrasive mixture which wears moving parts instead of protecting. No engine can stand up under the grinding action which takes place when this occurs. The air cleaner on every engine brought in for tune-up or repair should therefore be examined to see if it is clean and free from dirt and gum. If the cleaner shows unmistakable evidence of neglect or misuse, it may be good to show it to the customer before cleaning and instruct them on the proper care to assure good engine performance. Three types of air cleaners are used on Briggs & Stratton engines – (1) Oil Bath Type, (2) Felt Type (3) Moss Type, (4) Cartridge Type, (5) Dual Element Type and (6) Oil Foam® Type.

To Clean Air Cleaner – Oil Bath Type

Remove cover and filter and pour out oil, Fig. 113. Wash the filter element thoroughly and be sure it is completely drained before it is reassembled. Clean bowl and cover and wipe dry. Replace parts. Fill cleaner up to oil level mark on bowl with oil of the same viscosity as used in the crankcase. If the decal containing oil instructions on cleaning is worn or dirty, replace with a new decal, Part #27443 (obs.). These are available free from factory or your source of supply.

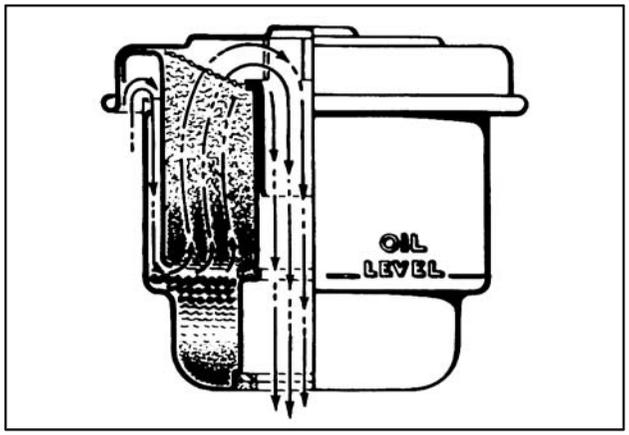

Fig. 113 – OIL BATH AIR CLEANER

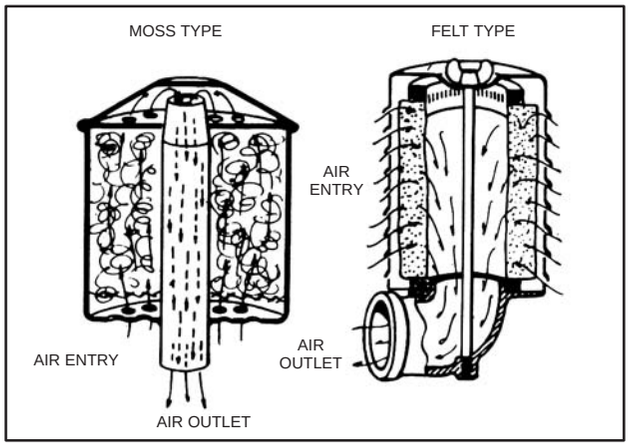

Fig. 114 – FELT AND MOSS TYPE AIR CLEANER

To Clean Air Cleaner – Felt Type

See Fig. 114. Rinse in safe solvent. Blow all dirt out of filter element. If filter element is gummy or greasy, and it cannot be cleaned, it should be replaced.

To Clean Air Cleaner – Moss Type

See Fig. 114. Rinse in safe solvent to remove dirt. Fill with oil through holes. Let excess oil drain out. If moss is gummy, and solvent will not remove dirt and gum, air cleaner should be replaced.

AIR CLEANERS, CARBURETORS & GOVERNORS, (cont'd)

CARTRIDGE TYPE

(with or without Oil-Foam® pre-cleaner or non-oiled pre-cleaner)

Remove and Install

1. Remove wing nut and cover.
2. Carefully remove cartridge to prevent dirt entry into carburetor.
3. Replace grommet (if torn or damaged).
4. Clean or replace cartridge as described on Page 4.

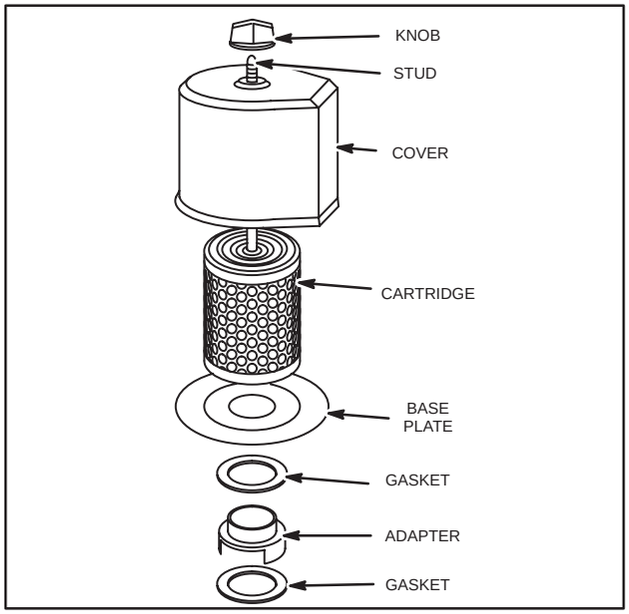

Fig. 115 – CARTRIDGE TYPE, HORIZONTAL AND VERTICAL CRANKSHAFT

DUAL ELEMENT AIR CLEANERS

Remove and Install

1. Remove knob or wing nut and cover.
2. If servicing pre-cleaner, slide pre-cleaner off cartridge and clean as described on Page 4. If servicing both pre-cleaner and cartridge, remove wing nut (when so equipped), washer (when so equipped) and pre-cleaner with cartridge together. Do not clean cartridge with liquid or compressed air. Replace dirty air cleaner cartridges.

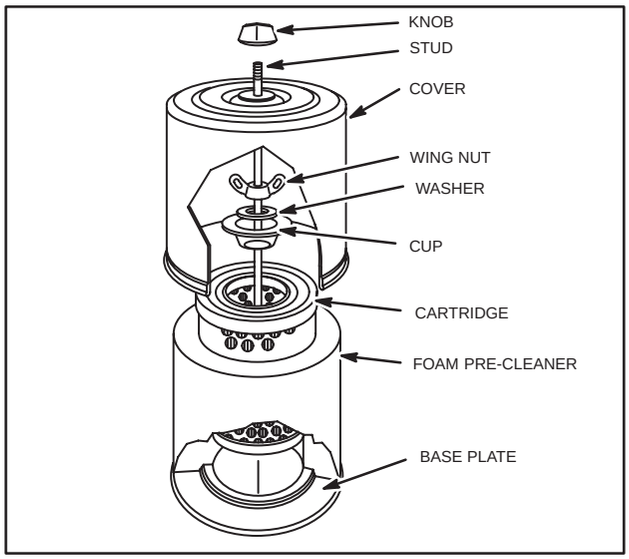

Fig. 116 – DUAL ELEMENT, HORIZONTAL AND VERTICAL CRANKSHAFT

Remove and Install

1. Remove air cleaner stud, cover screw, cover and gasket. Replace gasket if damaged.
2. Remove plate screw, washer and plate.
3. Remove cartridge and clean air cleaner body carefully to prevent dirt from entering carburetor. Brush dirt from body through holes into duct.

NOTE: On reverse flow air cleaners, dirt accumulates on the inside surface of element.

1. Re-assemble air cleaner as shown in Fig. 117.

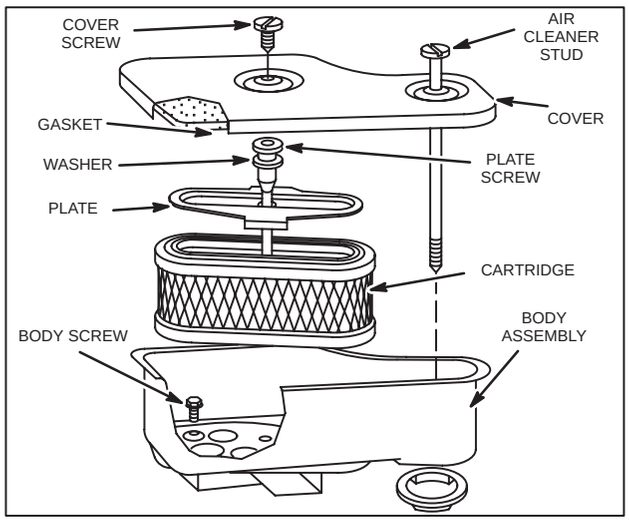

Fig. 117 – REVERSE FLOW CARTRIDGE AIR CLEANER, VERTICAL CRANKSHAFT

AIR CLEANERS, CARBURETORS & GOVERNORS, (cont'd)

OIL-FOAM® AIR CLEANER

Remove and Install

1. Remove screw or wing nut.
2. Remove air cleaner carefully to prevent dirt from entering carburetor.
3. Disassemble air cleaner.
4. Clean Oil-Foam® element, as described on Page 4.
5. Reassemble air cleaner as shown in Fig's. 118 or 119.

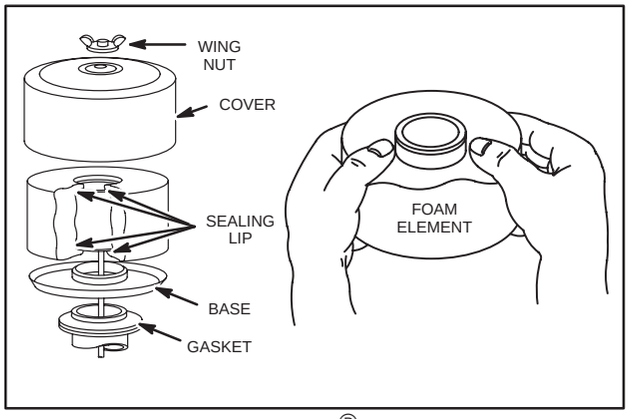

Fig. 118 – OIL-FOAM® AIR CLEANER

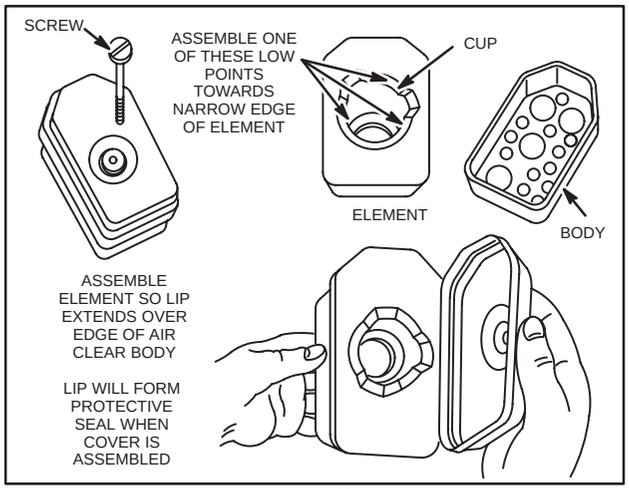

Fig. 119 – OIL-FOAM® AIR CLEANER, HORIZONTAL AND VERTICAL CRANKSHAFT

Remove and Install

1. Remove two (2) screws and lift off complete air cleaner.
2. Disassemble air cleaner.
3. Clean spacers, element support, screen, cup, body and cover.
4. Clean Oil-Foam® element as described on Page 4.
5. Insert element support into body (when used, Fig. 121) and then place Oil-Foam® element into body. Make sure that lip of Oil-Foam® element extends over edge of body all the way around to assure a protective seal.
6. Install spacer(s), screen and cup, Fig's. 120 and 121.
7. Place cover on air cleaner assembly with two (2) screws, Fig. 121.
8. Install air cleaner assembly on carburetor, Fig. 121.

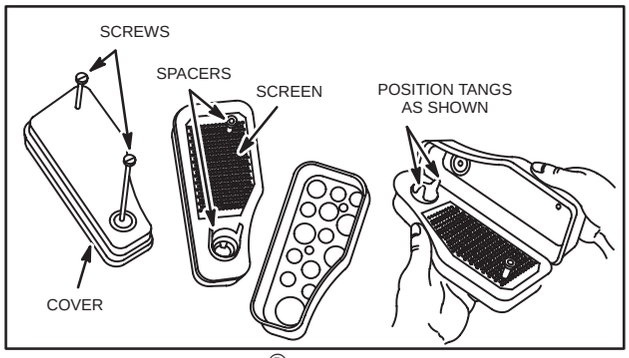

Fig. 120 – OIL-FOAM® AIR CLEANER, VERTICAL CRANKSHAFT

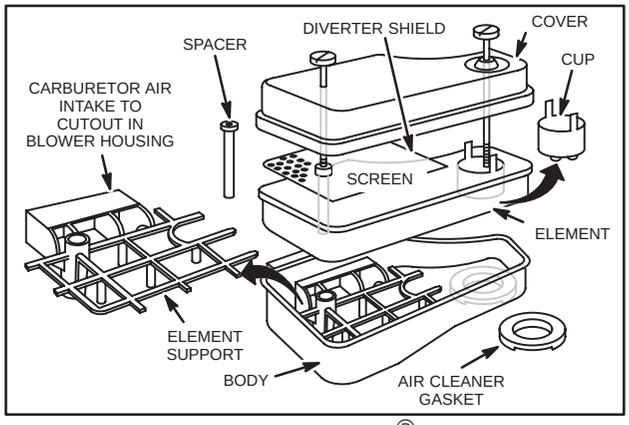

Fig. 121 – DUCTED OIL-FOAM® AIR CLEANER, VERTICAL CRANKSHAFT

Cleaning Air Cleaner Cartridge – Oil-Foam® Elements

When to Clean

CARTRIDGE only – Clean every 25 hours or once a season, whichever comes first. More often in dusty conditions.

CARTRIDGE with dry or oiled foam pre-cleaner – pre-cleaner every 25 hours and cartridge every 100 hours. More often in dusty conditions.

AIR CLEANERS, CARBURETORS & GOVERNORS, (cont'd)

OIL-FOAM® ELEMENT – every 25 hours (more often in dusty conditions).

Clean Cartridge

1. Clean cartridge by tapping gently on flat surface.
2. Do not use cleaning fluids or soapy water to attempt to clean the paper cartridge. Replace dirty cartridge with genuine Briggs & Stratton part.
3. Reassemble as described on previous pages, based on type of air cleaner.

CAUTION: Petroleum solvents, such as kerosene, are not to be used to clean cartridge. They will cause deterioration of cartridge. Do not oil cartridge. DO NOT USE PRESSURIZED AIR TO CLEAN OR DRY CARTRIDGE.

Clean and re-oil Oil-Foam® element every 25 hours or at three month intervals under normal conditions. Capacity of "Oil-Foam®" air cleaner is adequate for a full season's use, without cleaning, in average homeowner's lawn mower service. (Clean every few hours under extremely dusty conditions.) See Fig. 122.

Clean Oil-Foam® Element or Foam Pre-cleaner

1. WASH foam element in liquid detergent and water to remove dirt, Fig. 122A.
2. Wrap foam in cloth and squeeze dry, Fig. 122B.
3. Saturate foam with engine oil. Squeeze to remove excess oil, Fig's. 122C and D. **DO NOT OIL PRE-CLEANERS THAT ARE IMPRINTED "DO NOT OIL."**
4. Reassemble as described on previous pages, based on type of air cleaner.

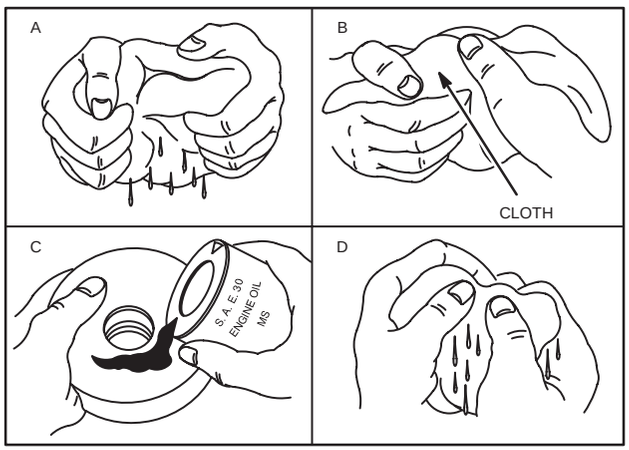

Fig. 122 – CLEANING OIL-FOAM® AIR CLEANER

FUEL SUPPLY SYSTEM

Three fuel supply systems are used on Briggs & Stratton engines: (1) Float Feed (Flo-Jet), (2) Vacu-Jet, and (3) Pulsa-Jet Fig. 123. The float feed system has the fuel tank above the carburetor level and the flow of fuel is controlled by the float and inlet valve in the carburetor. When the carburetor is fed by a fuel pump, the fuel tank can be mounted above or below the carburetor, the pump lift capacity being the the only limit. Vacu-Jet or Pulsa-Jet have the fuel tank below the carburetor and in most instances, the flow of fuel is controlled by a tank outlet (check valve) in the fuel tank. It is important that all parts be clean and free from dirt, gum, or varnish in order to operate properly. Use acetone or alcohol to remove gum or varnish.

WARNING: Clean parts in a well ventilated area. Follow cleaning liquid manufactures safety precautions.

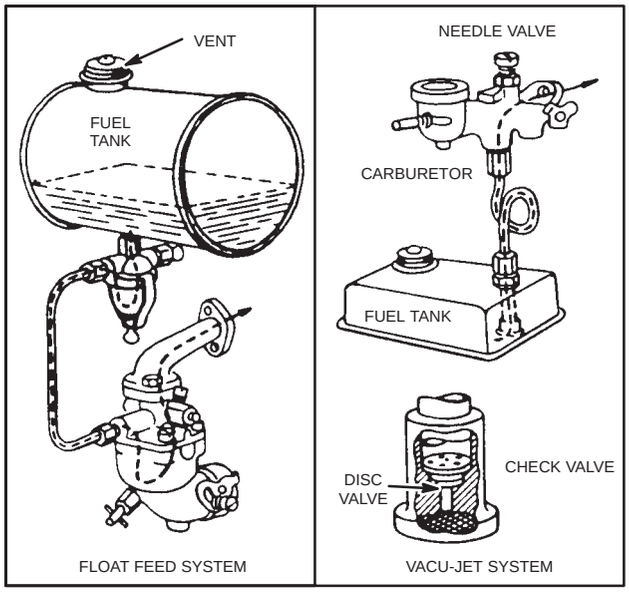

Fig. 123 – CARBURETORS

AIR CLEANERS, CARBURETORS & GOVERNORS, (cont'd)

To Remove Fuel Pipe

Remove and blow through to clean. Be sure that the connections are tight.

Fuel Filter

Most engine models with float feed type carburetors have fuel filters. To clean, first close the shut-off valve, then loosen thumb screw at bottom to remove glass bowl, gasket, and screen. Open shut-off valve to see if fuel flows freely from tank. If air bubbles appear after reassembling, loosen thumb nut until fuel overflows the filter bowl.

WARNING: Use safety approved container to catch excess fuel.

Tank Outlet

These are used on Models FH, L, NS, S, U, WI, WM, WMB, WMI, Y, Fig. 124. Remove from tank. Brush away dirt, but do not remove or damage screen. Blow through from screen end to see if check ball is free. Blow through opposite end to determine if check valve closes passage. If clogged, clean with alcohol or acetone. Be sure to replace gasket when replacing outlet in tank.

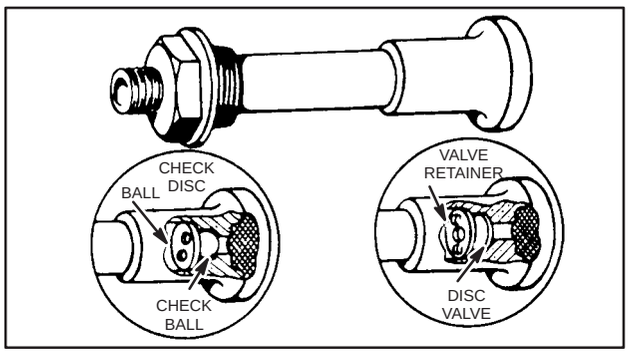

Fig. 124 – FUEL TANK OUTLET

Fuel Tank Cap

The vent hole in the tank cap on all models must be kept open, except on Model U engines. This cap should be air tight.

Fuel Tank

Flush tank with clean solvent to remove dirt and water. Use alcohol or acetone to dissolve gum. The hole in the air line connection on Model U must be open from .025" to .028", Fig. 383, Page 79, this section.

VACU-JET CARBURETORS – CAST IRON ENGINES

The Vacu-Jet carburetors are of much simpler design than the float feed type. In some instances there are no repairs other than replacing needle valves, connectors, etc., Fig. 125.

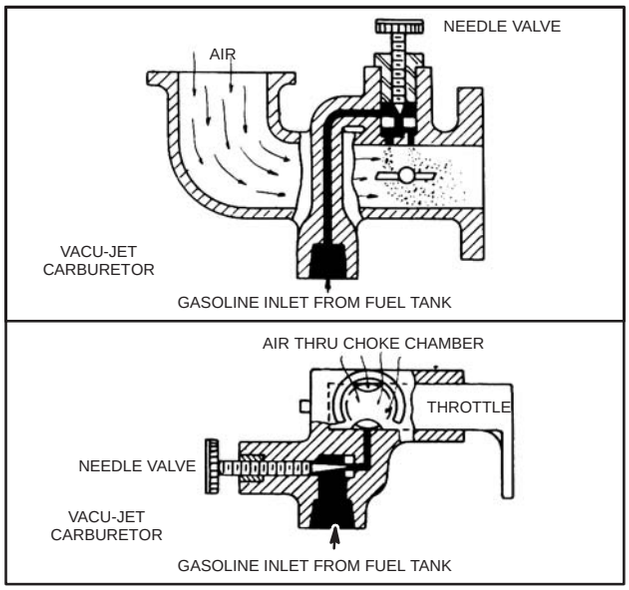

Fig. 125 – VACU-JET CARBURETORS

To Replace Carburetor

Remove air cleaner and fuel pipe. Loosen the carburetor mounting screws. Hold the carburetor to keep it from dropping. Unhook throttle spring and governor link.

Reassemble carburetor to engine by reversing above operations. The governor linkage must operate freely.

To Disassemble and Assemble Carburetors On Models WI, WM, WMB, WMI

The throttle shaft is held in place with a cotter pin at the end on the later models and by a throttle valve set screw on older models, Fig. 126. Remove cotter pin or set screw and throttle shaft can be pulled out. Replace all worn parts. Replace choke valve and insert throttle as far as possible. Insert cotter pin. On older models use a pointed tool to line up locating hole for set screw. B e sure throttle stop is between forked points of throttle lever. Insert throttle and choke valve set screw. Some models have a smaller locating hole and set screw, Part #63854 (obs.) has a smaller tip. For other models with a larger locating hole, use screw, Part #90211.

AIR CLEANERS, CARBURETORS & GOVERNORS, (cont'd)

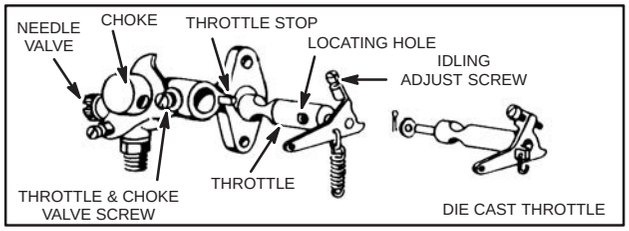

Fig. 126 – MODELS WI, WM, WMB, WMI

Models 5S, 6S, 6HS

The fuel tank is supported by the carburetor, held in place with two (2) screws, Fig. 127.

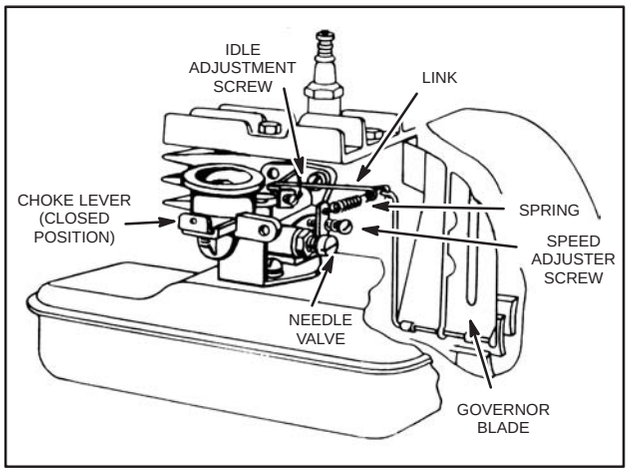

Fig. 127 – MODEL 5S, 6S, 6HS

The carburetor throttle can be removed by loosening the idle speed adjusting screw. This permits the throttle to be turned far enough to clear the retaining lug on the carburetor body, Fig. 127.

When reassembling the carburetor be sure to replace the gasket between the fuel tank and carburetor. Screw needle valve in until it just touches the seat, then turn it back 1-1/2 turns. Final adjustments should be made when the engine is running.

WARNING: The air cleaner must be installed when running the engine.

To Adjust Vacu-Jet Carburetors

The carburetor should be adjusted with the fuel tank approximately *half full*. With the engine running at normal operating speed (approximately 2700 RPM, no-load), turn the needle valve in until engine starts to lose speed, which indicates a lean mixture. Then open needle valve (turn counter-clockwise), very slowly until engine begins to run unevenly. This mixture should be rich enough for good performance under full load.

Then test the engine under full load. If it does not carry the load satisfactorily, it usually indicates that the mixture is still too lean and it may be necessary to open the needle valve more in order to further enrich the mixture. This richer mixture will cause a slight unevenness in idling.

Place throttle in idling position. Engine should idle no slower than 1750 RPM. If engine idles slower than 1750 RPM, turn idle speed adjusting screw until this speed is reached.

VACU-JET CARBURETORS – ALUMINUM ENGINES

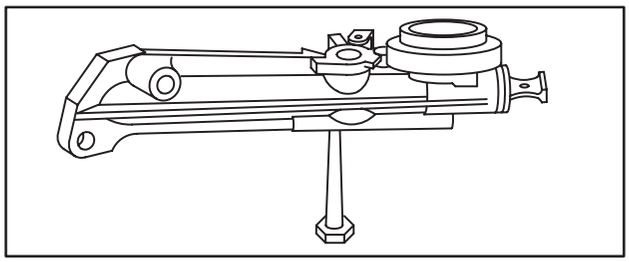

Fig. 128 – VACU-JET CARBURETOR

To Remove Carburetor and Tank Assembly

Remove the carburetor and fuel tank as one unit, being careful not to bend the governor linkage or spring. On models equipped with a stop switch, remove the ground wire. After removal of the carburetor from the fuel tank, inspect the tank for deposits of dirt and/or varnish and mounting surfaces. Tank should be cleaned in solvent.

To Remove Throttle

Cast throttles, Fig. 129, Ill. 1, are removed by backing off the idle speed adjusting screw until the throttle clears the retaining lug on the carburetor body, Fig. 130.

Stamped throttles, Fig. 129, Ill. 2, are removed by using a Phillips screwdriver to remove the throttle valve screw. After removal of the valve, the throttle may be lifted out. Reverse procedure to install, Fig. 131.

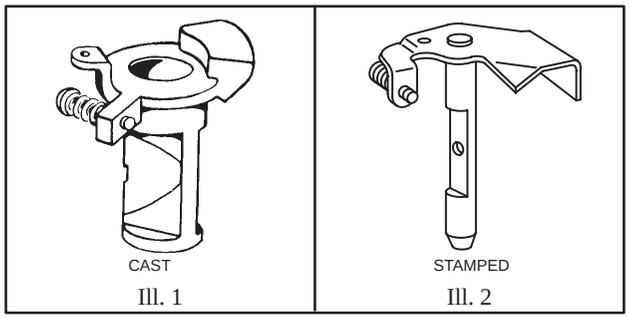

Fig. 129 – THROTTLE TYPES

AIR CLEANERS, CARBURETORS & GOVERNORS, (cont'd)

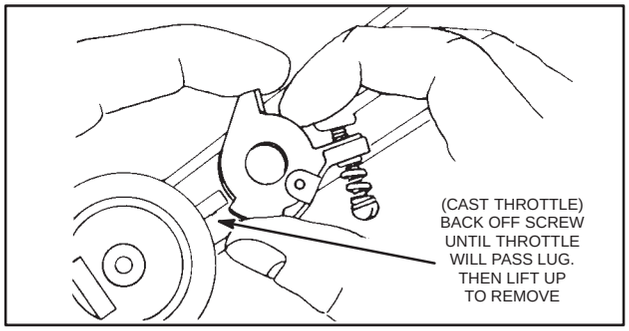

Fig. 130 – REMOVING OLD STYLE THROTTLES

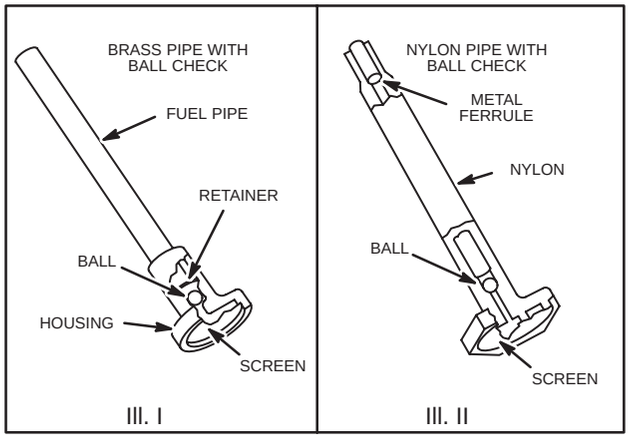

Fig. 132 – FUEL PIPES

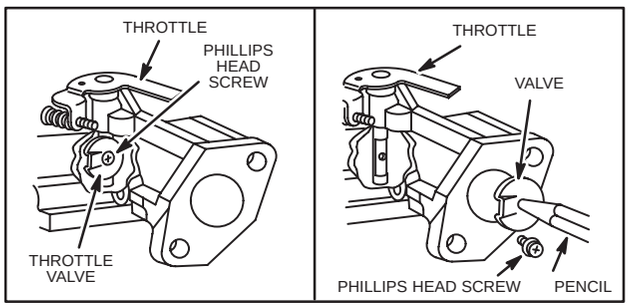

Fig. 131 – REMOVING AND INSTALLING NEW STYLE THROTTLES

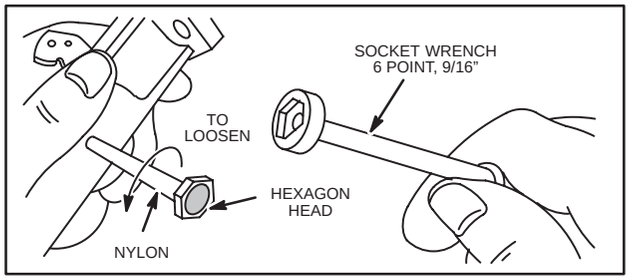

Fig. 133 – REPLACING NYLON FUEL PIPE

Fuel Pipe (Vacu-Jet)

The fuel pipe contains a check ball and a fine mesh screen. To function properly, the screen must be clean and the check ball free, Fig. 132. Replace pipe if screen and ball cannot be satisfactorily cleaned in carburetor cleaner. DO NOT LEAVE CARBURETOR IN CLEANER MORE THAN 1/2 HOUR WITHOUT REMOVING NYLON PARTS.

Nylon fuel pipes, Fig. 132, Ill. II, are removed and replaced with a 9/16" 6 point socket, Fig. 133. Brass fuel pipes, Fig. 132, Ill. II, are removed by clamping the pipe in a vise and prying out as shown in Fig. 134.

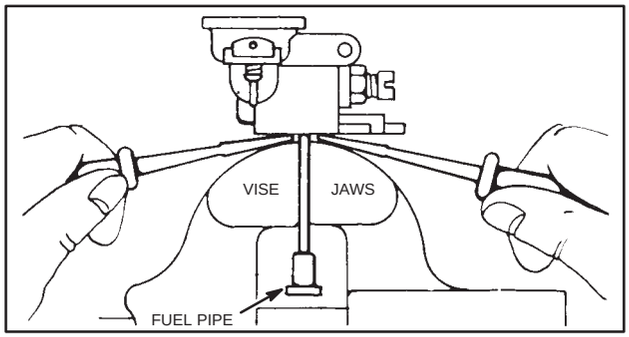

Fig. 134 – REMOVING BRASS FUEL PIPE

To install brass fuel pipes, remove the throttle, if necessary, and place the carburetor and pipe in a vise. Press the pipe into the carburetor until it projects 2-9/32" to 2-5/16" from carburetor gasket surface, Fig. 135.

AIR CLEANERS, CARBURETORS & GOVERNORS, (cont'd)

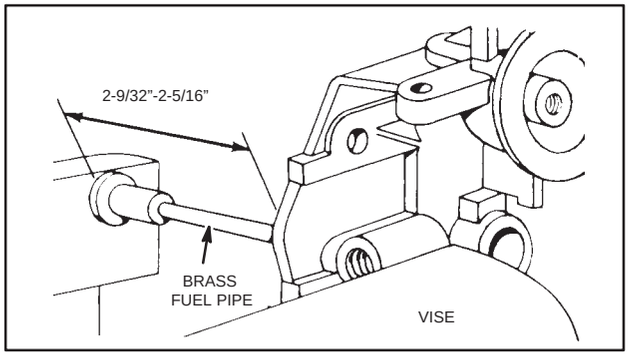

Fig. 135 – REPLACING BRASS FUEL PIPE

To Remove Needle Valve and Seat

Remove needle valve assembly to inspect. If carburetor is gummy or dirty, remove seat to allow better cleaning of metering holes.

NOTE: Do not change metering hole sizes, Fig. 136.

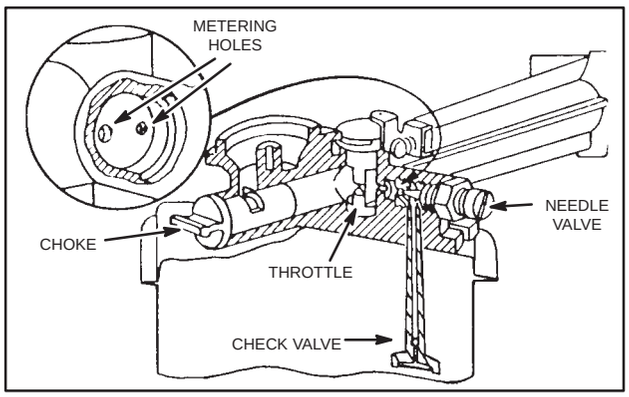

Fig. 136 – METERING HOLES

CHOKE-A-MATIC® Linkage

Disassemble

To remove choke link, remove speed adjustment lever and stop switch insulator plate. Work link out through hole in choke slide, Fig. 137.

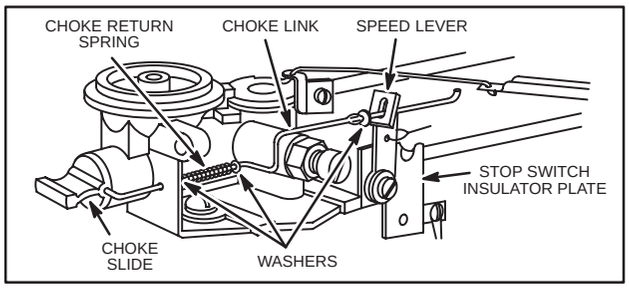

Fig. 137 – CHOKE-A-MATIC® LINKAGE

To Repair

Replace worn or damaged parts. To assemble carburetor using choke slide, Fig. 137, place choke return spring and three washers on choke link. Push choke link through hole in carburetor body, turning link to line up with hole in choke slide. Speed adjustment lever screw and stop switch insulator plate should be installed as one assembly after placing choke link through end of speed adjustment lever.

To Adjust CHOKE-A-MATIC® Linkage

The following covers CHOKE-A-MATIC® parts installed on and as a part of the carburetor assembly. See Section 4 for Choke-A-Matic® remote controls. To check operation of CHOKE-A-MATIC® linkage, move speed adjustment lever to "CHOKE" position. If choke slide does not "FULLY" close, bend choke link, Fig. 138. Speed adjustment lever must make good contact against stop switch.

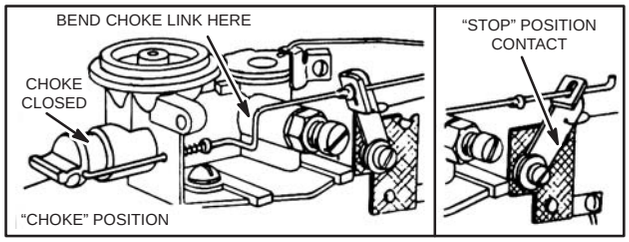

Fig. 138 – CHOKE-A-MATIC® LINKAGE

To Install Carburetor

Install carburetor and fuel tank as an assembly. Hook throttle link into carburetor throttle and governor lever. (For various hook-ups, see Remote Control, Section 4.) Raise carburetor into place, insert a new gasket and fasten with mounting screws.

Install governor spring. Install ground wire and remote control where used, Fig. 139.

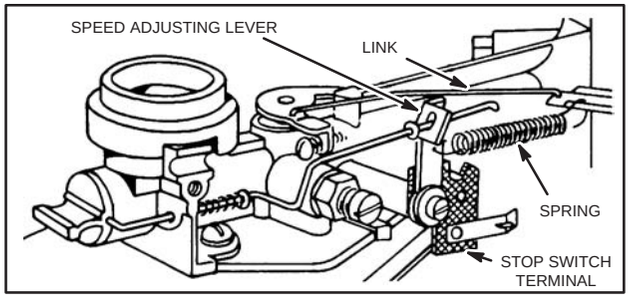

Fig. 139 – INSTALL CARBURETOR

CHOKE-A-MATIC® Remote Controls

See Remote Controls, Section 4, for Illustrations by engine model.

AIR CLEANERS, CARBURETORS & GOVERNORS, (cont'd)

Carburetor Adjustment

The initial setting of the needle valve, Fig. 140, is made by turning the needle valve all the way in, then turning out 1-1/2 turn. Final adjustment is made with engine running.

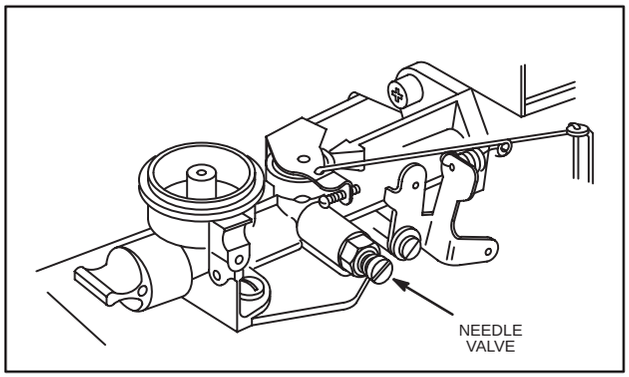

Fig. 140 – CARBURETOR ADJUSTMENT

WARNING: All carburetor adjustment should be made with the air cleaner on engine. Best adjustments are made with fuel tank 1/2 full.

Place governor speed control lever in "FAST" position. Turn needle valve slowly in until engine misses (clockwise-lean mixture) then turn it out slowly past smooth operating point until engine runs unevenly (rich mixture). Now turn needle valve to the midpoint between rich and lean so the engine runs smoothly. Next, adjust idle RPM. Rotate throttle counterclockwise and hold against stop. Adjust idle speed adjusting screw to obtain 1750 RPM minimum. Release throttle – engine should accelerate without hesitation or sputtering. If engine does not accelerate properly, the carburetor should be readjusted, usually to a slightly richer mixture.

Vacu-Jet Carburetors – Model Series 92500, 93500, 94500, 95500 Vertical Crankshaft

Vacu-Jet Carburetor Types

There are two (2) basic types of Vacu-Jet carburetors used on above series engines. They are ① Automatic Choke, and ② CHOKE-A-MATIC®, Fig. 141.

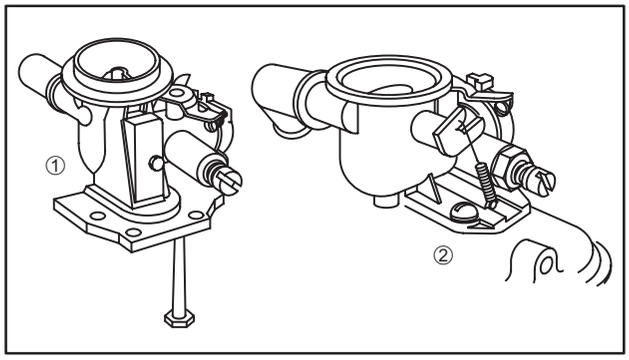

Fig. 141 – TYPES OF VACU-JET CARBURETORS

To Remove Carburetor and Fuel Tank – Pneumatic Governor

1. Remove carburetor and fuel tank assembly mounting bolts, Fig. 142.

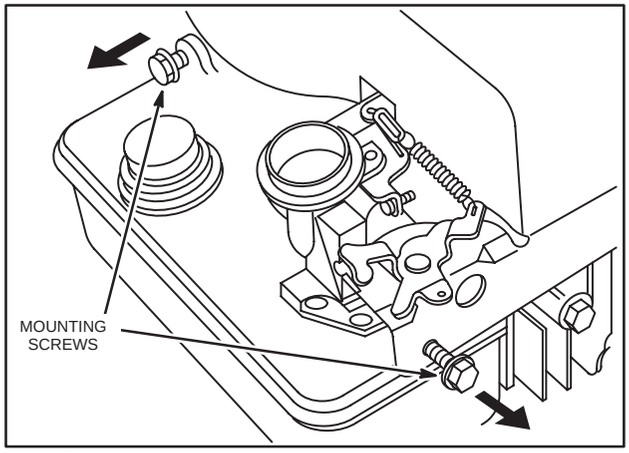

Fig. 142 – REMOVING MOUNTING SCREWS

2. Slip carburetor and fuel tank assembly off end of fuel intake tube and turn assembly to free throttle link from throttle lever.

3. This will leave governor link and governor spring connected to governor blade and control lever, Fig. 143.

AIR CLEANERS, CARBURETORS & GOVERNORS, (cont'd)

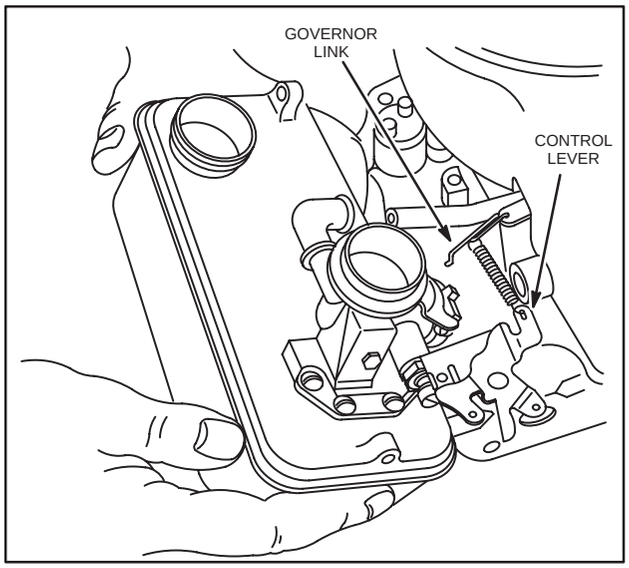

Fig. 143 – REMOVING CARBURETOR AND TANK ASSEMBLY

To Remove Automatic Choke

1. To remove choke parts, first remove automatic choke link cover.
2. Then slide choke link out choke shaft lever. Pull shaft out of valve, Fig. 144.

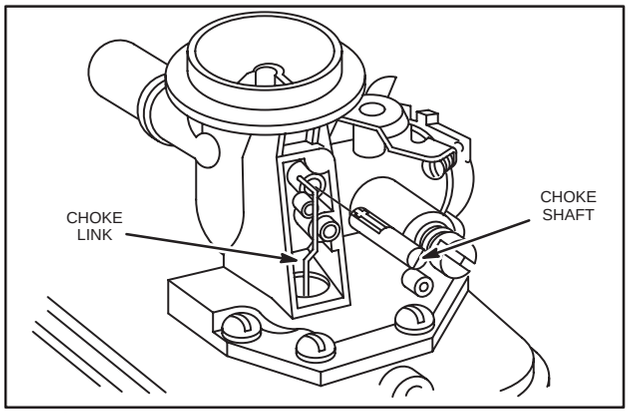

Fig. 144 – REMOVING AUTOMATIC CHOKE, TYPICAL

To Remove Carburetor from Fuel Tank, Model Series 92500, 93500, 94500, 95500

1. Remove screws holding carburetor on tank body.
2. Then lift carburetor straight up.
3. Remove diaphragm.

Breather and Intake Manifold

1. Intake manifold is held by screws to cylinder on vertical crankshaft Model Series 90000, 100000, 110000, and 130000, Fig. 145.
2. Check for good fit or damaged gaskets to prevent air leaks or entry of dirt.

NOTE: When installing reinforced plastic or metal intake manifold and new gasket, torques screws to 40 in. lbs. (4.5 Nm).

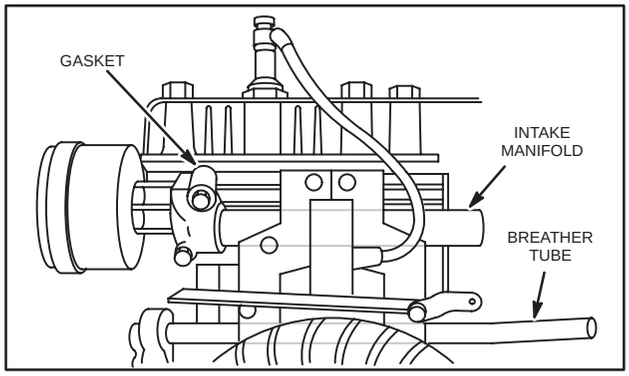

Fig. 145 – BREATHER AND INTAKE MANIFOLD

To Disassemble Vacu-Jet Carburetor

To Remove Needle Valve Assembly – Screw-In Type

1. Remove and discard "O"-ring, Fig. 146.
2. Remove and inspect needle valve, packing and seat.
3. Metering holes in carburetor body should be cleaned with solvent and compressed air only.
4. DO NOT ALTER SIZE OF HOLES, Fig. 146.

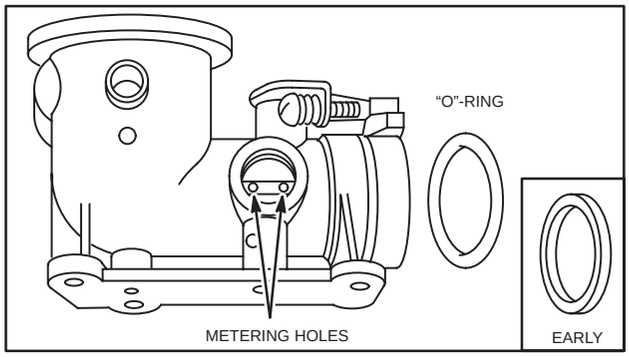

Fig. 146 – METERING HOLES AND "O"-RING, TYPICAL

NOTE: Some zinc carburetors use Minlon™ needle valve assembly, Fig. 147. See next subject heading "Remove Needle Valve Assembly – Pressed-in Type" for removal procedure.

AIR CLEANERS, CARBURETORS & GOVERNORS, (cont'd)

To Remove Needle Valve Assembly – Pressed-In Type

1. Remove and discard "O"-ring.
2. Back out mixture adjusting needle about four to five turns counterclockwise.
3. Then pull needle and seat assembly out.
4. Remove inner "O"-ring, Fig. 147.
5. Metering holes in carburetor body should be cleaned with carburetor solvent and compressed air only.

WARNING: Wear eye protection when using compressed air.

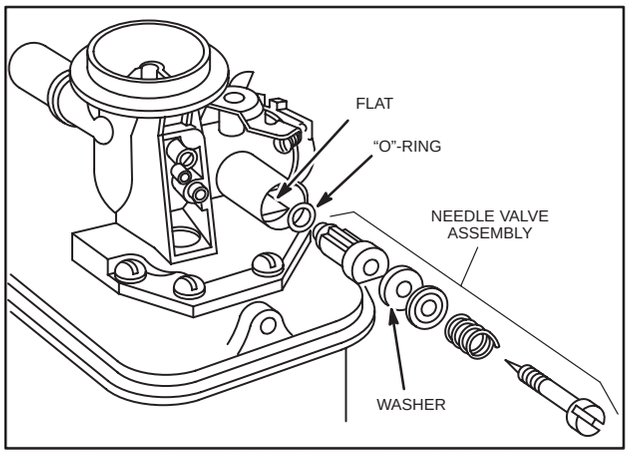

Fig. 147 – NEEDLE VALVE ASSEMBLY, PRESSED-IN-TYPE

To Remove Throttle Shaft and Plate

1. Throttle shaft, Fig. 148, is removed by using a Phillips or standard screwdriver to remove throttle plate screw.
2. After removal of valve, throttle shaft and dust seal may be lifted out, Fig. 149.

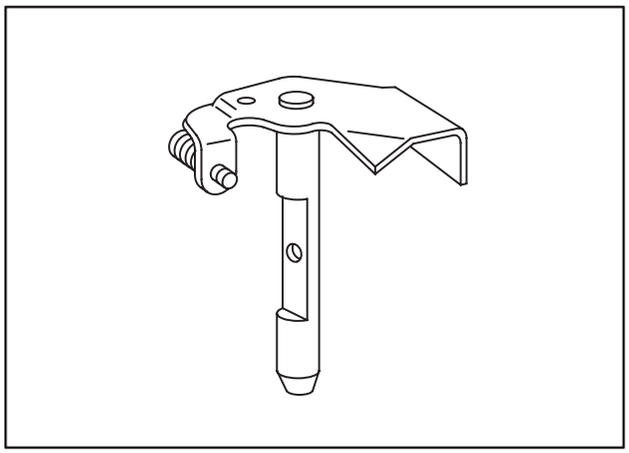

Fig. 148 – THROTTLE SHAFT AND LEVER

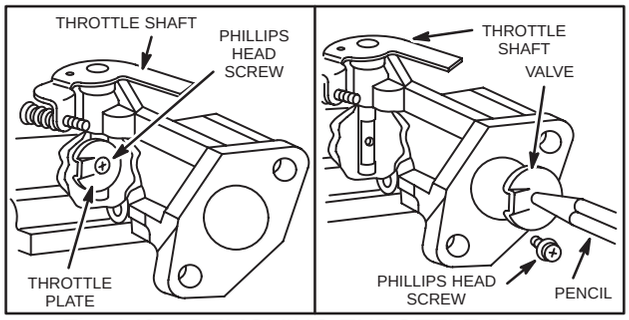

Fig. 149 – REMOVING THROTTLE PLATE, TYPICAL

To Remove Fuel Pick-Up Tube Vacu-Jet Carburetor Model Series 92500, 93500, 94500, 95500, Vertical Crankshaft

Fuel pick-up tubes on Minlon™ carburetors are the snap-in design. Tubes may snap out with considerable force, Fig. 150.

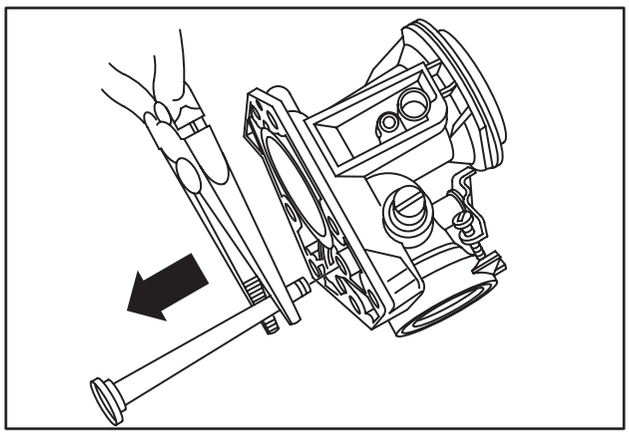

Fig. 150 – REMOVING PICK-UP TUBE VACU-JET CARBURETOR

To Remove Fuel Pick-Up Tube Screw-in Type Model Series 92500, 93500, 94500, 95500, Vertical Crankshaft

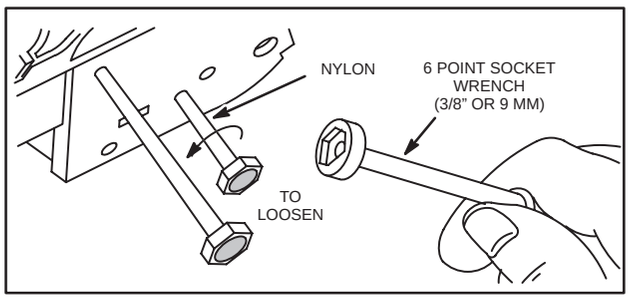

Fig. 151 – REMOVING FUEL PICK-UP TUBES, TYPICAL

AIR CLEANERS, CARBURETORS & GOVERNORS, (cont'd)

NOTE: Vacu-Jet carburetors have a check ball in fuel pick-up tube. To function properly, screen must be clean and check ball free. Replace pipe if screen is clogged or check ball is not free to move.

To Remove Nylon Choke Shaft and Plate, – Model Series 92500, 93500, 94500, 95500 Vertical Crankshaft

1. To remove choke parts, first disconnect choke return spring (when used), Fig. 152.

2. Then pull nylon choke shaft sideways to separate choke shaft from choke plate.

NOTE: If choke plate is heat-sealed to choke shaft, loosen by sliding sharp pointed tool along edge of choke shaft.

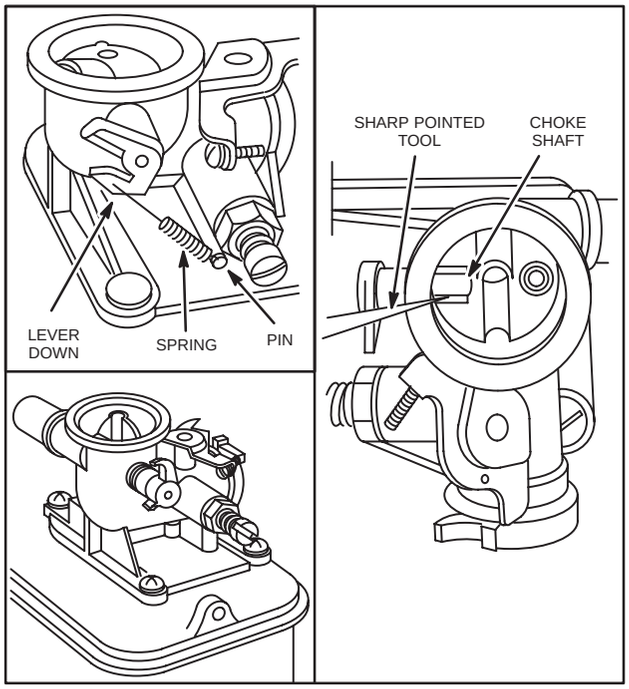

Fig. 152 – CHOKE SHAFT AND VALVE – CHOKE-A-MATIC®

Inspection And Repair

Check all parts for wear and replace as needed. Examine fuel pipe screens for gum deposits and dirt. Replace if dirty. Replace diaphragm if worn, torn, punctured or stiff. Inspect mixture adjustment needle, Fig. 233, and replace if damaged.

NOTE: On Vacu-Jet carburetors there is a check ball in fuel pick-up tube. To function properly, screen must be clean and check ball free. Replace pipe if screen is clogged or check ball is not free to move, Fig 75.

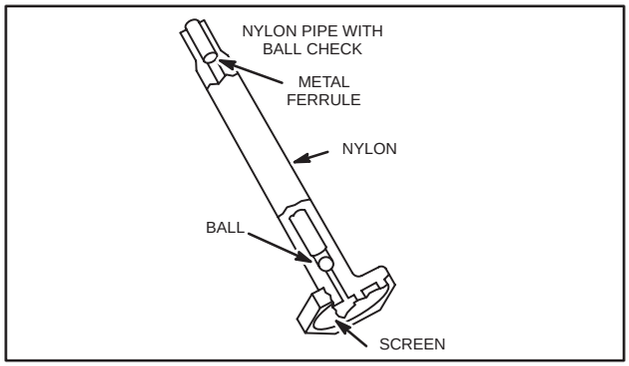

Fig. 153 – FUEL PICK-UP TUBE

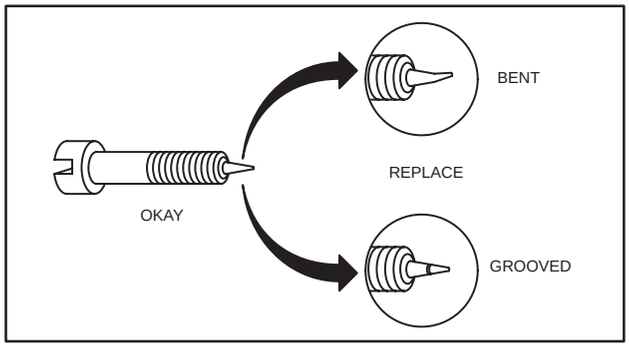

Fig. 154 – MIXTURE NEEDLE

To Inspect Tank

After removal of carburetor from fuel tank, inspect tank for presence of water and deposits of dirt, rust, gum, and/or varnish.

After removal of carburetor from fuel tank, inspect tank for deposits of dirt and/or varnish.

To Check Diaphragm and Spring

The diaphragm is suitable for further use, provided it has not developed wear spots, become stiff, or has punctures. Check to ensure fuel pump flapper valves are not damaged.

Also check choke spring length, Table No. 9.

AIR CLEANERS, CARBURETORS & GOVERNORS, (cont'd)

Table No. 9

DIAPHRAGM SPRING LENGTH		
Color	**Minimum Length**	**Maximum Length**
None	15/16" (23.8 mm)	1" (25.4 mm)
Red	1–1/8" (28.6 mm)	1–7/32" (30.9 mm)
Blue	1–5/16" (33.3 mm)	1–3/8" (35 mm)
Green	1–7/64" (28.2 mm)	1–3/8" (35 mm)

NOTE: If spring length is shorter or longer than specified, replace diaphragm and spring.

To Check Tank Top

Machine surface on top of fuel tank must be flat in order for diaphragm to provide an adequate seal between carburetor and tank. If machined surface on tank is not flat, it is possible for gasoline to enter vacuum chamber by passing between machined surface and diaphragm. Once fuel has entered vacuum chamber, it can move through vacuum passage and into carburetor.

Flatness of machined surface on tank top can be checked by straight edge and feeler gauge, as shown in Fig. 155. A .002" (.05 mm) feeler gauge should not enter between straight edge and machined surface, when checking at shaded areas shown, Fig. 155. Replace tank if gauge enters.

NOTE: STRAIGHT EDGE MUST BE ACCURATE. Do not file tank top to restore flatness, this will cause carburetor to run even richer.

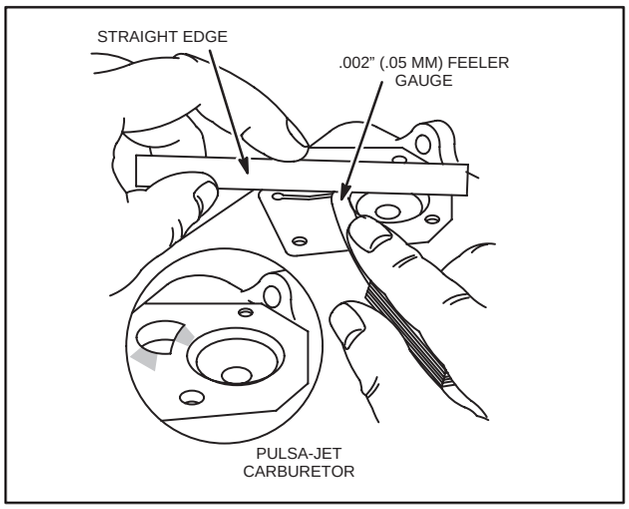

Fig. 155 – CHECKING TANK TOP FLATNESS

To Assemble Vacu-Jet Carburetor Vertical Crankshaft

To Install Fuel Pick-Up Tube, Metal Body

Thread fuel pick-up tube into carburetor body using a 9/16" wrench or socket, Fig. 156. No sealant is required on threads of fuel pipe.

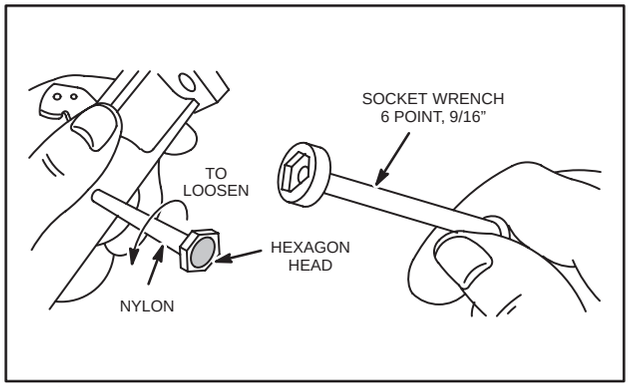

Fig. 156 – INSTALLING FUEL PICK-UP TUBE, TYPICAL

To Install Pressed-In Type Fuel Pick-Up Tube

Insert pick-up tube in carburetor body. Place pick-up tube screen squarely on a hard surface. Push firmly on carburetor with palm of hand. It may take considerable force, Fig. 157. to snap pick-up tube in place.

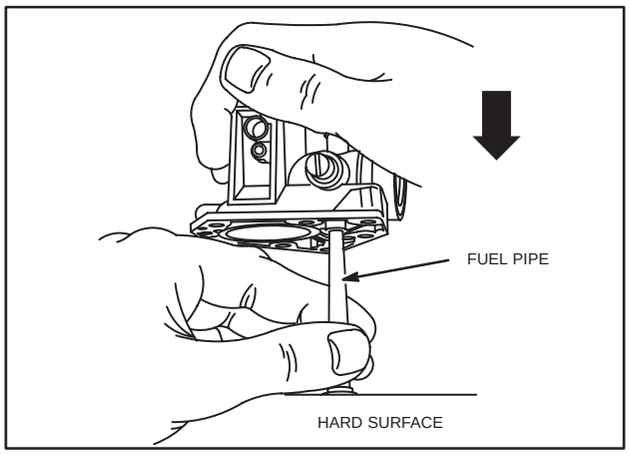

Fig. 157 – INSTALLING FUEL PIPE, MINLON ™ CARBURETOR

AIR CLEANERS, CARBURETORS & GOVERNORS, (cont'd)

To Assemble Automatic Choke

1. Place choke plate in throat of carburetor placing short shaft in hole next to breather inlet.

2. Insert choke shaft into choke shaft bore with automatic choke link hole positioned as shown in Fig. 158.

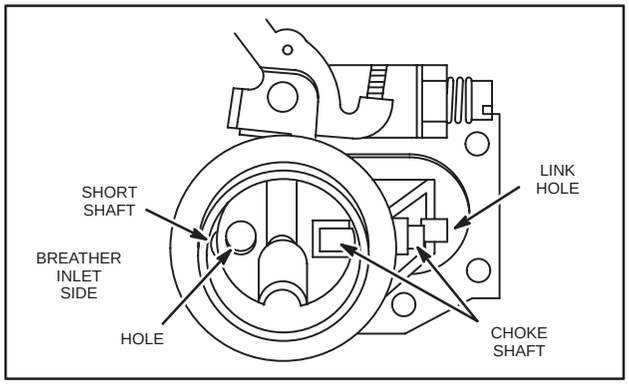

Fig. 158 – ASSEMBLING AUTOMATIC CHOKE

To Assemble Choke Plate (With Poppet Valve)

Do not reseal parts on assembly. When replacing choke plate and shaft, install choke plate so poppet valve spring is visible when valve is in full choke position on carburetors using poppet valve, Fig. 159.

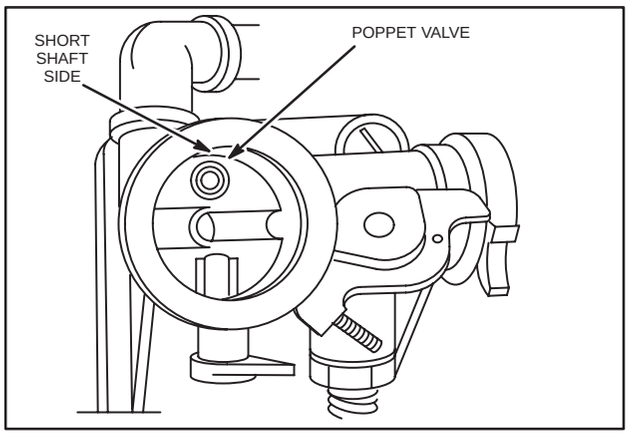

Fig. 159 – POPPET VALVE

1. If a new diaphragm is being installed, assemble choke spring to diaphragm, as shown in Fig. 160. See Table No. 10 for correct spring usage. Be careful not to bend or distort spring.

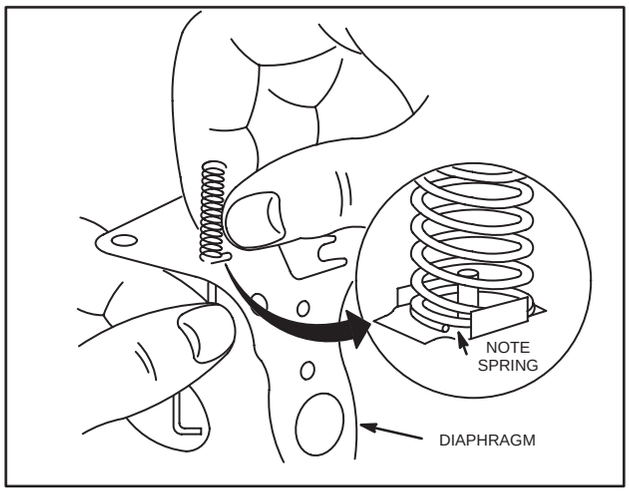

Fig. 160 – ASSEMBLE SPRING TO DIAPHRAGM

Table No. 10

DIAPHRAGM SPRINGS WHERE USED BY COLOR	
	Model Series
Carburetor Type	90000
Vacu-Jet, Automatic Choke	Not Colored Standard GREEN See Service Bulletin #533

AIR CLEANERS, CARBURETORS & GOVERNORS, (cont'd)

NOTE: Service Bulletin #533 covered installation of choke plate and choke spring (GREEN) (part #396227) to eliminate problems with hot starting.

NOTE: On vertical crankshaft Model Series 92500 (Type Number 0600 and under) hook small loop on post on carburetor body and long hook on choke shaft lever, Fig. 161.

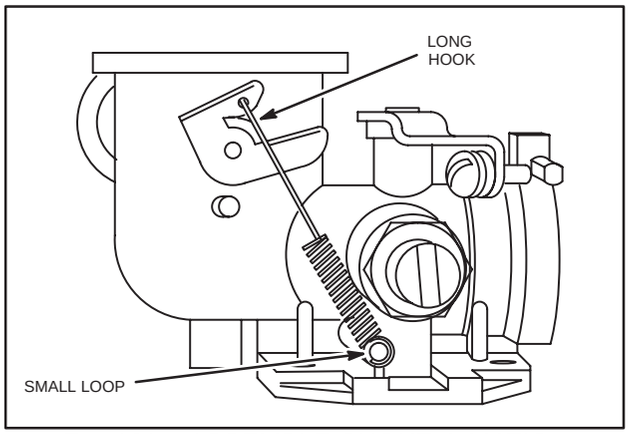

Fig. 161 – ASSEMBLE CHOKE-A-MATIC® SPRING

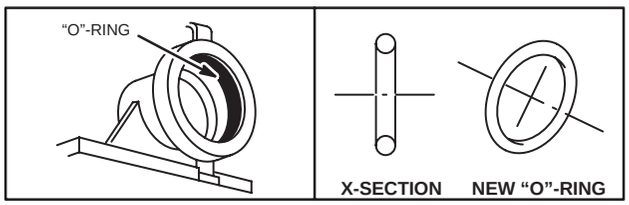

Fig. 162 – "O"-RING

To Assemble Vacu-Jet Carburetor to Fuel Tank

1. Place "O"-ring in groove in throttle bore, Fig. 162.

2. Holding carburetor body upside down, place diaphragm on body while guiding choke link thru hole for link, Fig. 163.

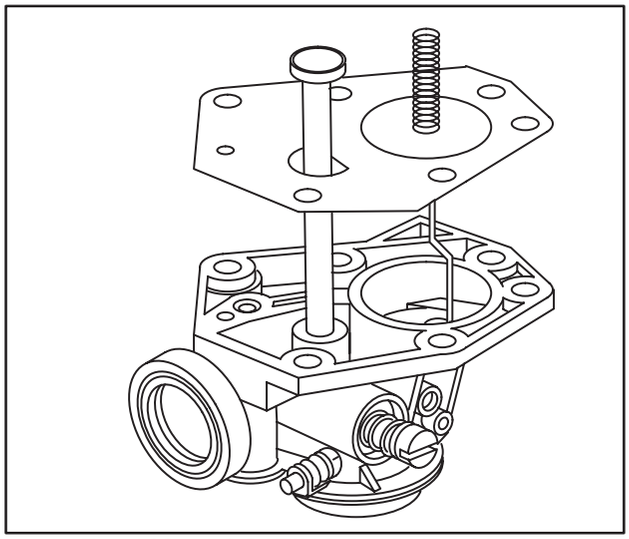

Fig. 163 – LOCATING DIAPHRAGM ON CARBURETOR

3. Lower tank down onto carburetor, while guiding choke spring into spring well, Fig. 164.

4. While holding carburetor and body together, turn assembly right side up.

5. Thread carburetor mounting screws into tank top about two turns. DO NOT TIGHTEN.

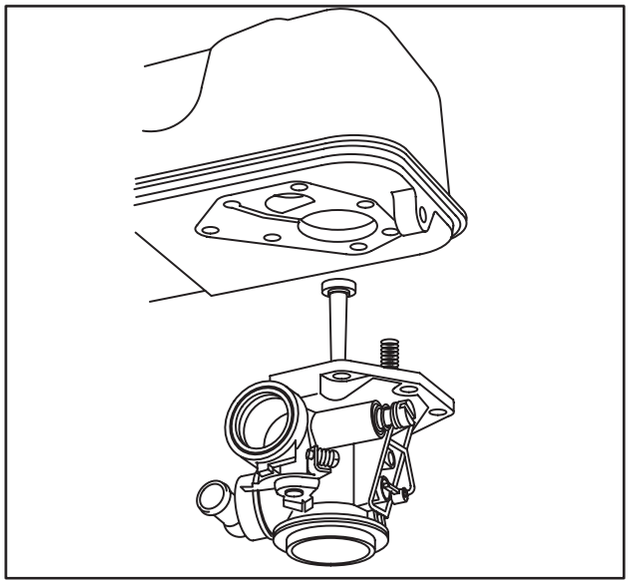

Fig. 164 – ASSEMBLING TANK TO CARBURETOR

6. Close choke plate. Insert choke link into choke shaft as shown, Fig. 165.

AIR CLEANERS, CARBURETORS & GOVERNORS, (cont'd)

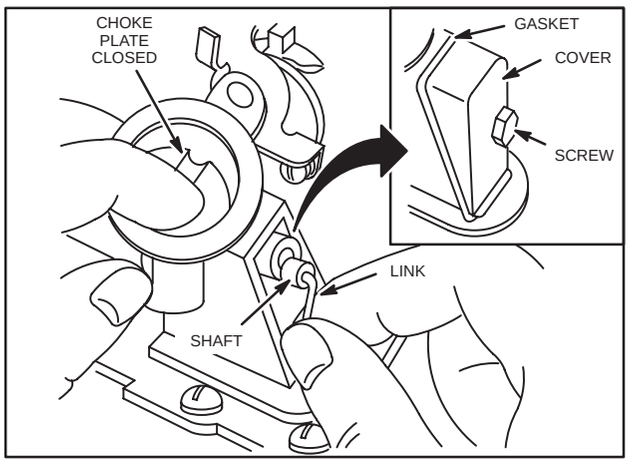

Fig. 165 – INSERTING CHOKE LINK

7. Install rubber elbow and assemble carburetor to fuel tank including pre-loading automatic choke (diaphragm), as described in next subject, "Pre-Load Diaphragm."

To Pre-Load Diaphragm

1. Move choke plate to an over center position as shown in Fig. 166.

2. Hold choke while tightening carburetor mounting screws in a staggered sequence.

NOTE: Opening choke to an over center position places diaphragm in a pre-loaded condition.

3. Move choke plate to normal closed position. Choke plate should now remain fully closed, Fig. 165.

4. If choke plate is not fully closed, check to be sure choke spring is properly assembled to diaphragm, and also properly inserted in its pocket in tank top.

5. Install choke link cover and gasket.

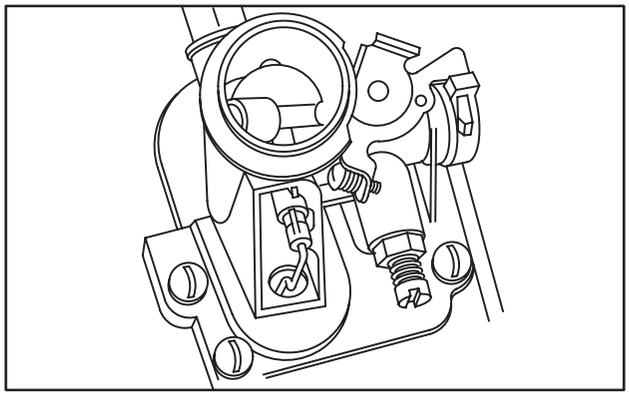

Fig. 166 – PRE-LOADING DIAPHRAGM

To Assemble Vacu-Jet CHOKE-A-MATIC® Carburetor to Fuel Tank

1. Place new tank mounting gasket on tank top.

2. Lower carburetor unto tank top.

3. Install two (2) mounting screws and tighten.

To Install Needle Valve Assembly, Screw-in Type

1. Install needle valve seat being sure not to cause burrs in slot.

2. Insert needle valve into threaded nut assembly. Turn clockwise 1-2 turns.

3. Install needle valve assembly, Fig. 167.

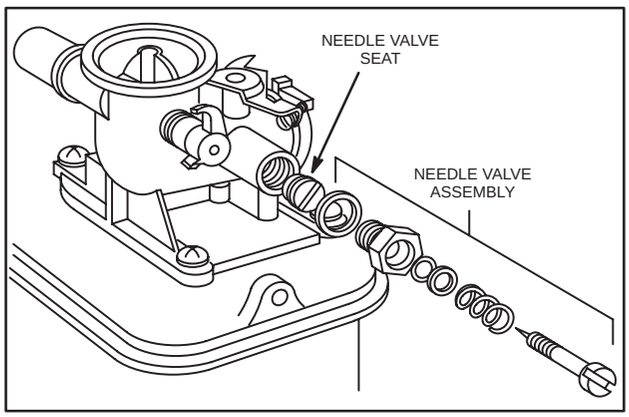

Fig. 167 – NEEDLE VALVE ASSEMBLY, SCREW-IN TYPE

AIR CLEANERS, CARBURETORS & GOVERNORS, (cont'd)

NOTE: On zinc carburetor bodies that use pressed-in type Minlon™ needle valve assembly, see next two steps in "Install Pressed-in Type Needle Valve Assembly" Fig's. 168 and 169.

To Install Needle Valve Assembly Pressed-In Type

1. Place "O"-ring on shoulder of needle seat.

2. Turn needle in until large seal washer just touches needle seat, Fig. 168.

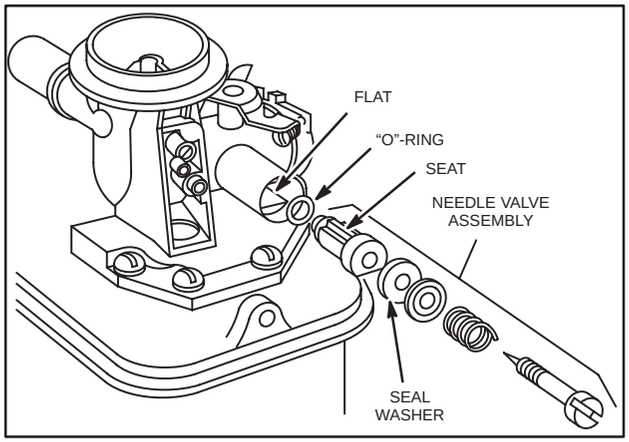

Fig. 168 – NEEDLE VALVE ASSEMBLY PRESS-IN TYPE

3. Assemble needle valve assembly and turn screw until it just touches spring.

4. Install needle valve as an assembly being sure flat on valve seat lines up with flat in carburetor body, Fig. 168.

NOTE: On later carburetors, a slot was added to top of needle valve assembly bore to line up with rib on needle valve assembly, Fig. 168.

5. Oil fill tube, Part #280131 will help firmly seat valve assembly, Fig. 169.

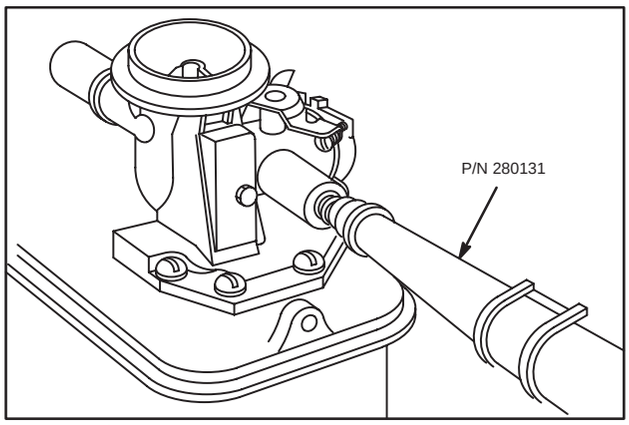

Fig. 169 – INSTALLING PRESSED-IN NEEDLE VALVE

To Install Carburetor and Tank Assembly Automatic Choke Model Series 92500, 93500, 94000, 95000 Vertical Crankshaft

1. Apply light film of oil to "O"-ring in throttle bore.

2. Then hook bell crank into governor lever rod.

3. Align carburetor with intake tube and breather grommet.

4. Be sure "O"-ring does not distort when fitting carburetor to intake tube.

5. Install governor spring as shown in Section 4, Page 8.

To Install Carburetor and Tank Assembly CHOKE-A-MATIC® Model Series 92000 Vertical Crankshaft

1. Put a light film of oil on "O"-ring in throttle bore.

2. With governor link hooked to governor blade, connect link to throttle and slip carburetor into place.

3. Align carburetor with intake tube and breather tube grommet.

4. Hold choke lever as shown in Fig. 170, so it does not catch on control plate.

5. Be sure "O"-ring in carburetor does not distort when fitting carburetor to intake tube.

6. Install mounting bolts. Fig. 171 shows routings of stop switch wires.

AIR CLEANERS, CARBURETORS & GOVERNORS, (cont'd)

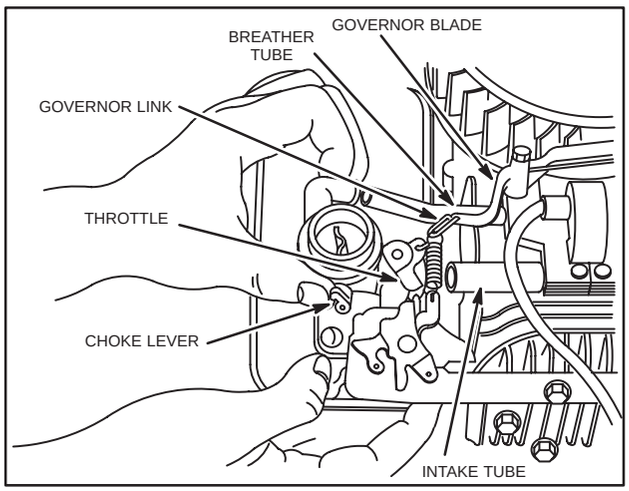

Fig. 170 – INSTALL CARBURETOR AND TANK ASSEMBLY

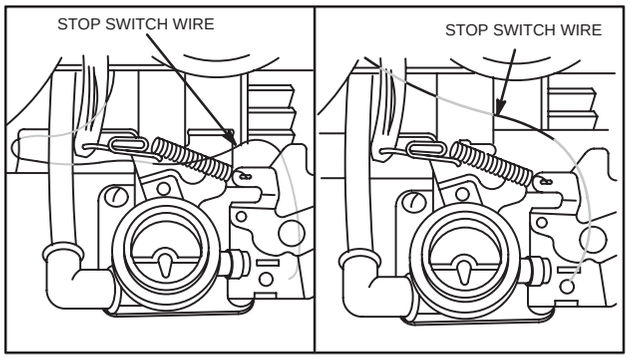

Fig. 171 – STOP SWITCH WIRES

To Adjust CHOKE-A-MATIC® Controls Model Series 92500 Vertical Crankshaft

CHOKE-A-MATIC® is standard on Model Series 92500 (type nos. lower than 0600) engines. Remote control must be of type in which control wire moves out of casing, when control lever is moved from "STOP" position to "CHOKE" or "START" position. A minimum travel of 1–3/8" (35 mm) is required when remote control is mounted, Fig. 172.

1. Remove air cleaner and move control lever to a position about midway between idle and fast.

2. Then mount remote control with casing clamp as shown in Fig. 173.

To adjust remote control assembly proceed as follows:

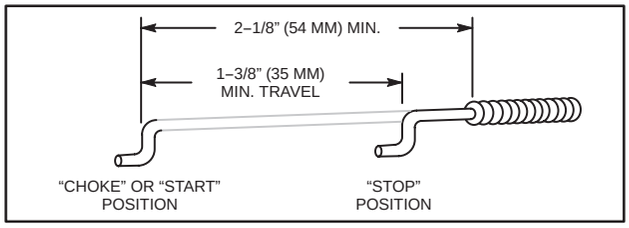

Fig. 172 – REMOTE CONTROL

1. Place control lever on equipment in "FAST" (high speed) position.

NOTE: Control must be mounted on equipment to make an accurate adjustment.

2. Lever "A" on carburetor should be just touching choke shaft at "B."

3. Move casing "D" forward or backwards until correct position is obtained.

4. Tighten screw "C." Recheck operation of controls after adjustment, Fig. 173.

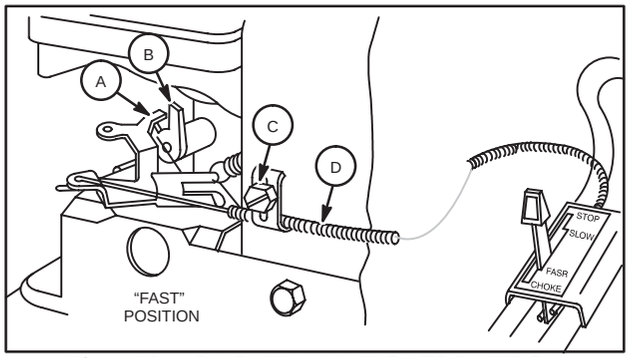

Fig. 173 – CHOKE-A-MATIC® CONTROL, TYPICAL

Carburetor Adjustment

WARNING: When making carburetor adjustments on Vacu-Jet carburetors, air cleaner and stud must be installed on carburetor.

Model Series 92500, 93500, 94500, and 95500 engines should be adjusted with fuel tank one-quarter (1/4) full of gasoline.

Initial Adjustment

1. Turn needle valve clockwise until needle lightly contacts the seat.

2. Turn counterclockwise 1-1/2 turns. This initial adjustment will permit engine to be started and warmed up before making final adjustment.

AIR CLEANERS, CARBURETORS & GOVERNORS, (cont'd)

NOTE: If carburetor is out of adjustment so that it will not start, close needle valve by turning it clockwise. Then open needle valve 1-1/2 turns counterclockwise using Tool #19263, Carburetor Adjusting Screwdriver, Fig. 174.

Final Adjustment

1. Place governor speed control lever in "FAST" position.
2. Turn needle valve in until engine misses (clockwise – lean mixture) then turn needle valve out (counterclockwise) 3/8 turn.
3. Next, adjust idle RPM.
4. Rotate throttle counterclockwise and hold against stop.
5. Adjust idle speed adjusting screw to obtain 1750 RPM.
6. Release throttle – engine should accelerate without hesitation or sputtering.
7. If engine does not accelerate properly, carburetor should be re-adjusted, usually to a slightly richer mixture.

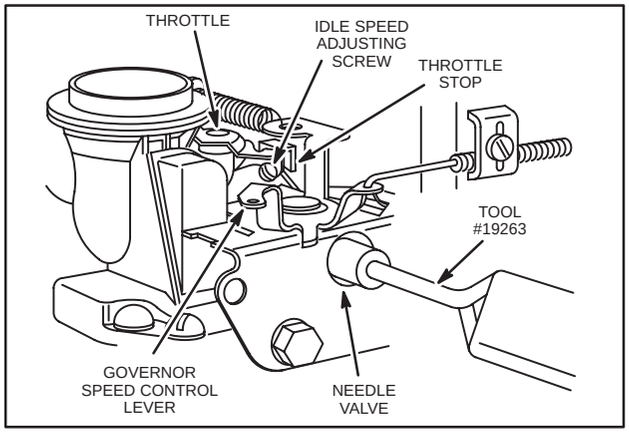

Fig. 174 – ADJUSTING CARBURETOR

NOTE: Flooding can occur if engine is tipped at an angle for a prolonged period of time, if engine is cranked repeatedly when spark plug wire is disconnected, or if carburetor mixture is adjusted too rich.

In case of flooding, move governor control to "STOP" position and pull starter rope at least six times. (Crank electric starter models for at least 5 seconds.)

Move control to "FAST" position and start engine. If engine continues to flood, lean carburetor needle valve – 1/8 to 1/4 turn clockwise or see Page 30, paragraph 2-A, B, and C.

When control is placed in "STOP" position governor spring holds throttle in a closed (idle) position.

WARNING: Do NOT remove spark plug and rotate engine to clear a flooded condition.

VACU-JET CARBURETORS – Horizontal Crankshaft

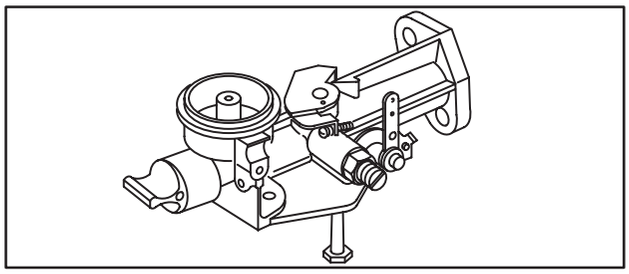

Fig. 175 – VACU-JET CARBURETOR

To Remove Carburetor and Fuel Tank

Carburetor and fuel tank can be removed as an assemble as follows:

1. Using Tool #19305, Offset Screwdriver, Tool #19391, Torx® Wrench, or open end wrench, remove two screws holding carburetor to cylinder.
2. Disconnect stop switch wire and disconnect governor link from throttle shaft lever.

To Remove Carburetor from Fuel Tank

1. Remove two (2) screws holding carburetor on fuel tank.
2. Separate carburetor from fuel tank and remove fuel tank gasket and discard.

To Disassemble Carburetor

To Remove Spiral

NOTE: Some carburetor models have a spiral in carburetor bore.

1. To remove, clamp carburetor in a vise with smooth jaws about half an inch below top of jaws.
2. Grasp spiral firmly with a pair of pliers, as shown, Fig. 176.
3. Place a screwdriver under ledge of pliers.
4. Using edge of vise, push down on screwdriver handle to pry out spiral, Fig. 176.
5. Inspect gasket surface of carburetor. Repair if mounting surface is damaged.

AIR CLEANERS, CARBURETORS & GOVERNORS, (cont'd)

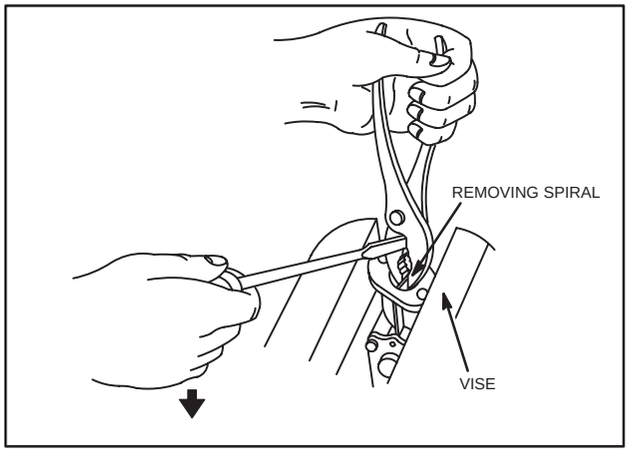

Fig. 176 – REMOVING SPIRAL

To Remove Throttle Plate and Shaft

1. Throttle shaft, Fig. 177, is removed by using a Phillips or standard screwdriver to remove throttle plate screw.
2. After removal of throttle plate, throttle shaft and dust seal may be lifted out, Fig. 178.

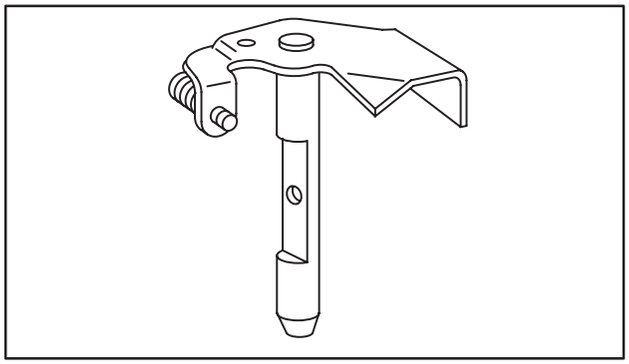

Fig. 177 – THROTTLE SHAFT AND LEVER, TYPICAL

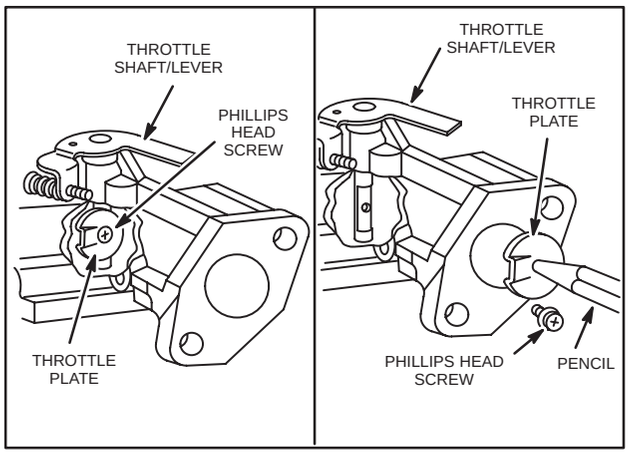

Fig. 178 – REMOVING THROTTLE

To Remove Fuel Pick-Up Tube – Vacu-Jet

Nylon fuel pick-up tubes, Fig. 182, are removed and replaced with a 6 point 9/16" socket, Fig. 179.

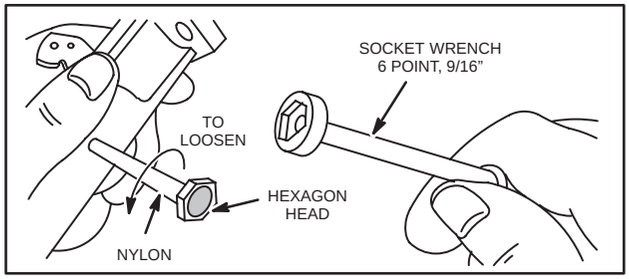

Fig. 179 – REPLACING NYLON FUEL PICK-UP TUBE

To Remove Needle Valve and Seat

1. Remove needle valve to inspect.
2. Replace needle valve if needle is bent, grooved, or broken.
3. Replace seat if screwdriver slot is damaged.
4. If carburetor is gummy or dirty, remove seat to allow better access to metering holes, Fig. 180.
5. Use only compressed air or solvents to clean metering holes.

NOTE: Do not change metering hole sizes, Fig. 180.

WARNING: Wear eye protection when using compressed air.

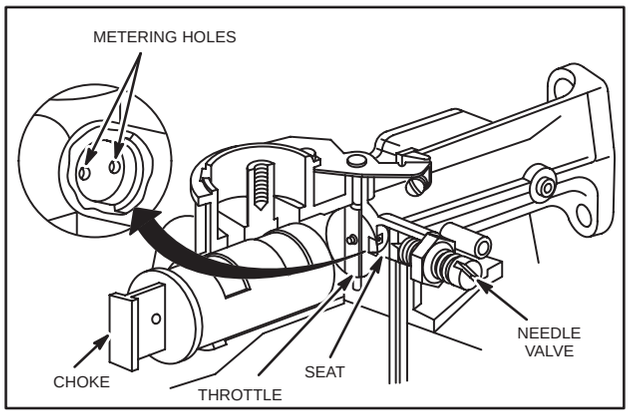

Fig. 180 – METERING HOLES

Inspection and Repair

Check all parts for wear and replace as needed. Examine fuel pick-up tube screen for gum deposits and dirt. Replace if dirty. Replace diaphragm if worn, torn, punctured or stiff. Inspect mixture adjustment needle, Fig. 181, and replace if damaged.

AIR CLEANERS, CARBURETORS & GOVERNORS, (cont'd)

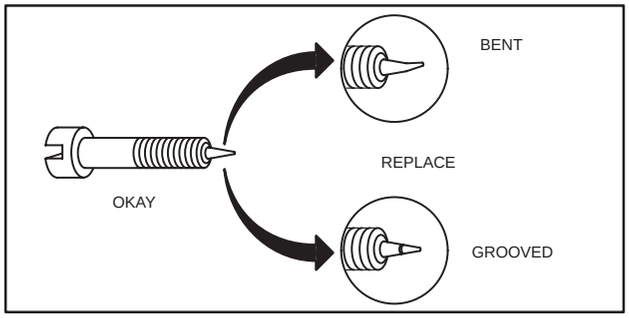

Fig. 181 – MIXTURE NEEDLE

NOTE: On Vacu-Jet carburetors there is a check ball in the fuel pick-up tube. To function properly, screen must be clean and check ball free. Replace pipe if screen is clogged or the check ball is not free to move.

The fuel pick-up tube contains a check ball and a fine mesh screen. To function properly, screen must be clean and check ball free, Fig. 182. Replace pick-up tube if screen and ball cannot be satisfactorily cleaned in carburetor cleaner.

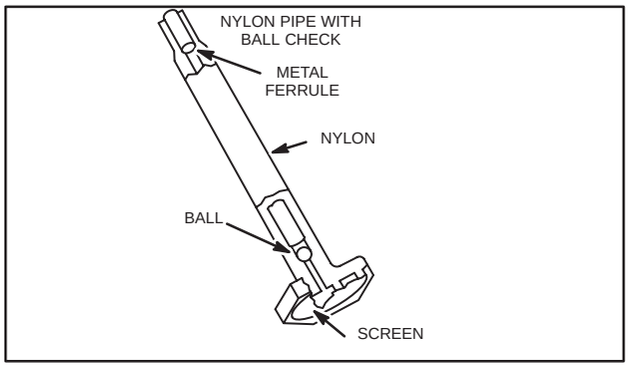

Fig. 182 – FUEL PICK-UP TUBE

To Assemble Vacu-Jet Carburetor Horizontal Crankshaft

To Install Throttle Shaft and Plate

1. Place new dust seal on throttle shaft and install in carburetor body, Fig. 183.

2. Install throttle plate in carburetor body and install Phillips or slotted screws, Fig. 183.

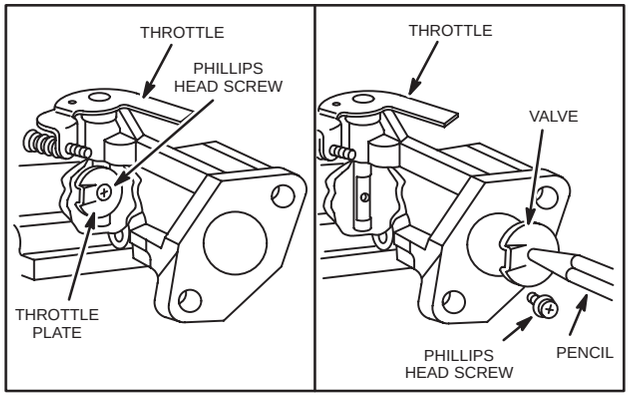

Fig. 183 – INSTALLING THROTTLE PLATE

To Install Spiral

When inserting spiral, top must be flush to 1/32" (.8 mm) below carburetor flange, and spiral parallel with fuel tank mounting surface, Fig. 184.

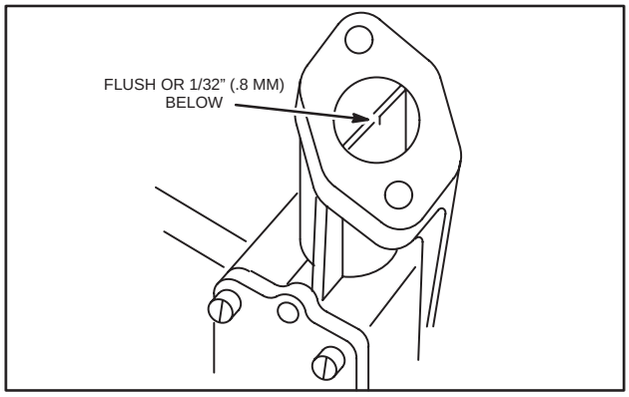

Fig. 184 – INSTALLING SPIRAL

To Assemble CHOKE-A-MATIC® Linkage, Slide Choke

1. To assemble, slip washer(s) and spring over choke link, Fig. 185.

2. Hook choke link through hole in choke slide. Place other end of choke link through hole in speed adjustment lever.

3. Mount lever and stop switch insulator plate to carburetor (when used).

AIR CLEANERS, CARBURETORS & GOVERNORS, (cont'd)

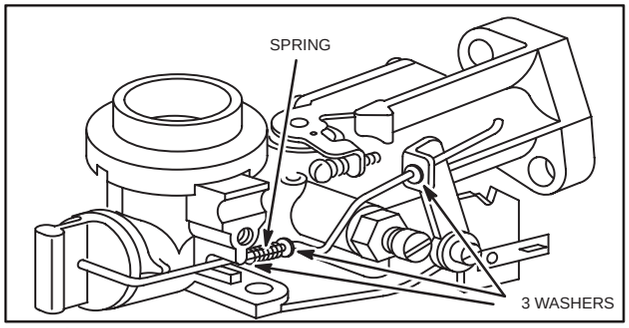

Fig. 185 – ASSEMBLING CHOKE-A-MATIC® LINKAGE

To Install Fuel Pick-Up Tube

Thread fuel pick-up tube. Fig. 153 into carburetor body using a 9/16" wrench or socket, Fig. 156. No sealant is required on threads.

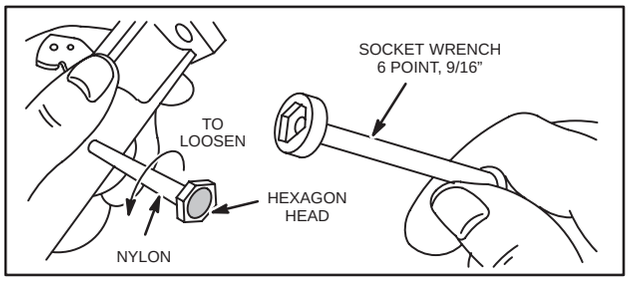

Fig. 186 – INSTALLING NYLON FUEL PICK-UP TUBE

To Install Carburetor and Fuel Tank Horizontal Crankshaft

1. Place new carburetor to cylinder gasket on carburetor and install carburetor on cylinder with two (2) mounting screws.
2. Place new carburetor to fuel tank gasket on fuel tank and lift tank up against bottom of carburetor. Install two (2) screws in carburetor and fuel tank.

Carburetor Adjustment

Initial Adjustment

1. Install idle mixture valve and spring. Turn mixture valve clockwise until valve just touches valve seat.
2. Back out valve 1-1/2 turns counterclockwise. This is the preliminary adjustment.
3. Install carburetor on engine and connect stop switch wire and governor controls.
4. Install complete air cleaner assembly.

Final Adjustment

NOTE: Fuel tank must be filled to 1/2 full before making final carburetor adjustments. Any additional fuel in the tank during the adjustment procedure will alter the performance of the engine.

WARNING: Air cleaner must be in place when running engine.

1. Start and run engine at half throttle for five minutes to bring engine up to operating temperature.
2. Place governor speed control lever in "FAST" position.
3. Turn needle valve in until engine misses (clockwise – lean mixture) then turn it out past smooth operation point until engine runs unevenly (counterclockwise – rich mixture).
4. Turn needle valve to midpoint between rich and lean so engine runs smoothly.
5. Adjust idle RPM. Rotate throttle counterclockwise and hold against stop.
6. Adjust idle speed adjusting screw to obtain 1750 RPM.
7. Release throttle – engine should accelerate without hesitation or sputtering.
8. If engine does not accelerate properly, carburetor should be re-adjusted, usually to a slightly richer mixture.

PULSA-JET CARBURETORS

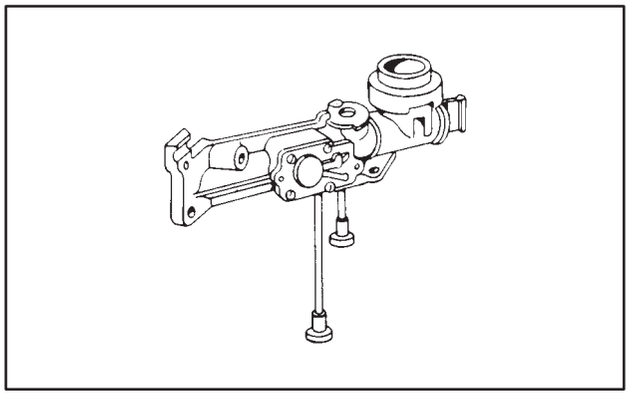

Fig. 187 – PULSA-JET CARBURETOR

Model Series 82000, 92000, 94000, 95000, 110900 and 111900 only

Model Series 82500, 92500, 94500 and 95500 have Vacu-Jet carburetors. Model Series 82900, 92900, 94900, 110900 and 111900 have a Pulsa-Jet carburetor.

To Remove Carburetor

Remove carburetor and fuel tank assembly mounting bolts, Fig. 188.

AIR CLEANERS, CARBURETORS & GOVERNORS, (cont'd)

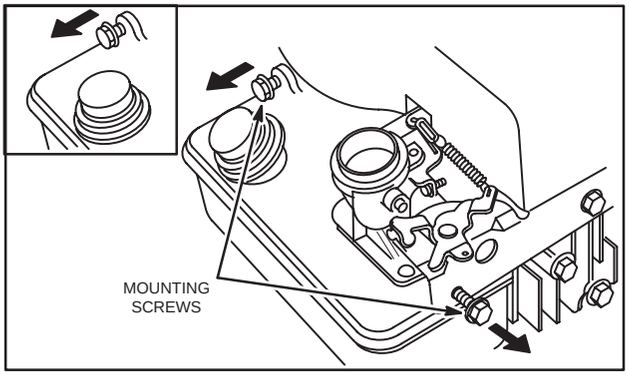

Fig. 188 – REMOVING MOUNTING BOLTS

Slip carburetor and fuel tank assembly off end of fuel intake tube and turn assembly to free throttle link from throttle lever. This will leave governor link and governor spring connected to the governor blade and control lever, Fig. 189.

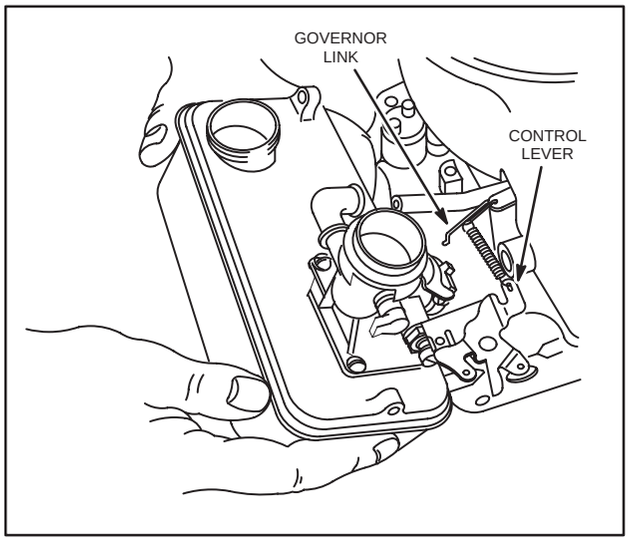

Fig. 189 – REMOVE CARBURETOR AND TANK ASSEMBLY

To Remove Carburetor, Model Series 82000 and 92000 CHOKE-A-MATIC®

Remove screws holding carburetor onto tank body. Then lift carburetor straight up. Remove pump spring, spring cup and diaphragm.

To Remove Carburetor And Tank Assembly

Remove the carburetor and fuel tank as one unit, being careful not to bend the governor linkage. On models equipped with a stop switch, remove the ground wire, Fig. 190.

NOTE: On some Pulsa-Jet carburetors Tool #19305 offset screwdriver can be used.

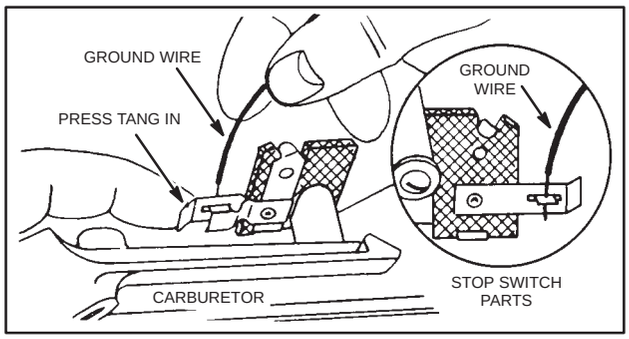

Fig. 190 – REMOVING GROUND WIRE

After removal of the carburetor from the fuel tank, inspect the tank for deposits of dirt and/or varnish.

To Remove Throttle

Cast throttles, Fig. 191, Ill. 1, are removed by backing off the idle speed adjustment screw until the throttle clears the retaining lug on the carburetor body, Fig. 192.

Stamped throttles, Fig. 191, Ill. 2, are removed by using a Phillips screwdriver to remove the throttle valve and screw. After removal of the valve, the throttle may be lifted out, Fig. 192. Reverse procedure to install, Fig's. 192 or 193.

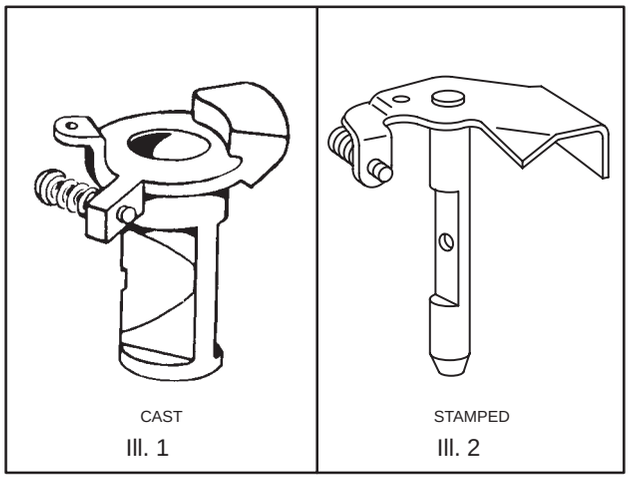

Fig. 191 – THROTTLE TYPES

AIR CLEANERS, CARBURETORS & GOVERNORS, (cont'd)

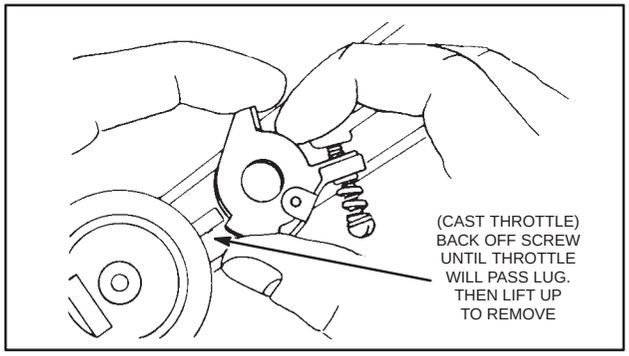

Fig. 192 – REMOVING CAST THROTTLE

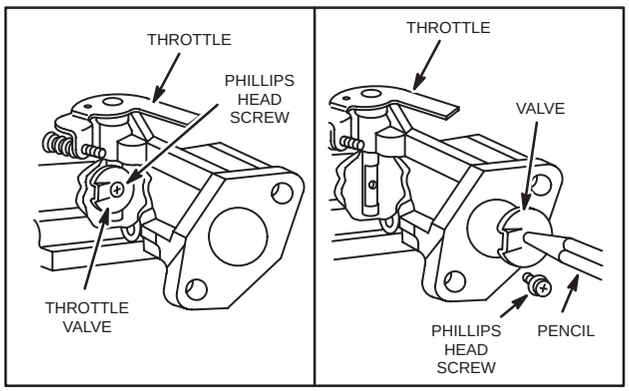

Fig. 193 – REMOVING STAMPED THROTTLE

Some carburetor models have a spiral in the carburetor bore. To remove, fasten carburetor in a vise with smooth jaws about half an inch below top of jaws. Grasp spiral firmly with a pair of pliers, as shown, Fig. 194. Place a screwdriver under ledge of pliers. Using edge of vise, push down on screwdriver handle to pry out spiral, Fig. 194. Inspect gasket surface of carburetor. Repair if mounting surface is damaged.

When inserting spiral, top must be flush to 1/32" below carburetor flange, and spiral parallel with fuel tank mounting surface, Fig. 194.

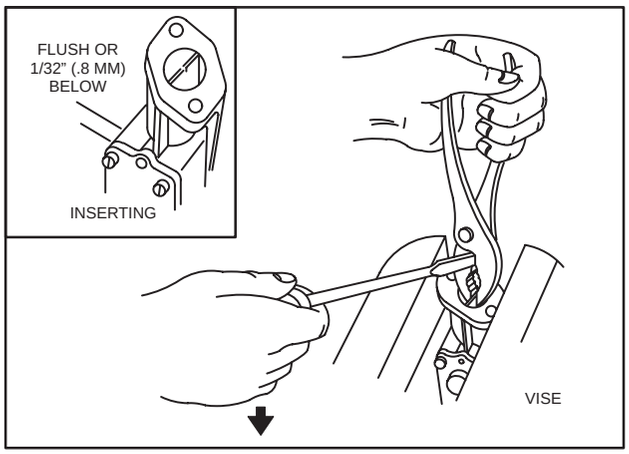

Fig. 194 – REMOVING AND INSERTING SPIRAL

Fuel Pipe (Pulsa-Jet)

Check balls are not used in these fuel pipes. The screen housing or pipe must be replaced if the screen can not be satisfactorily cleaned. The long pipe supplies fuel from the tank to the pump and tank cup. The short pipe supplies fuel from the tank cup to the carburetor, Fig. 195. Fuel pipes are nylon or brass. Short nylon pipes are removed and replaced by using a six point socket, or open end wrench, Fig. 196. WHERE BRASS PIPES ARE USED, THE NYLON OR BRASS SCREEN HOUSING ONLY IS REPLACED, Fig. 197. Clamp the fuel pipe in a vise (do not overtighten). Drive off the brass housing with a screwdriver or flat punch, Fig. 197. The new housing is installed by tapping it on the pipe with a soft hammer.

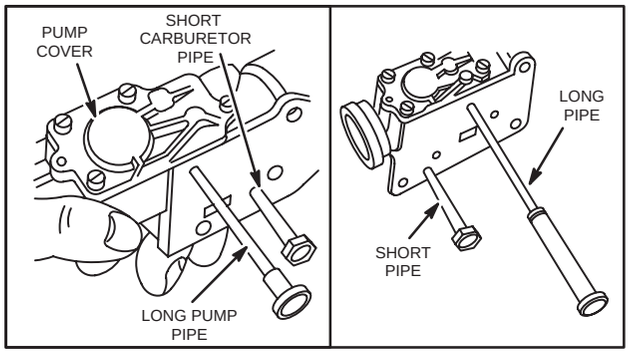

Fig. 195 – FUEL PIPES

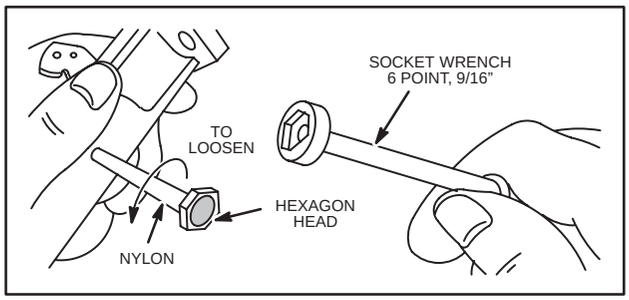

Fig. 196 – REPLACING FUEL PIPE

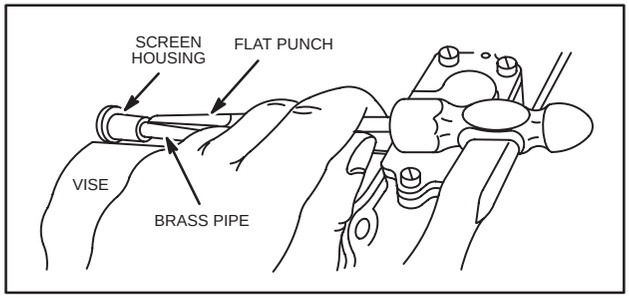

Fig. 197 – REPLACING FUEL PIPE

AIR CLEANERS, CARBURETORS & GOVERNORS, (cont'd)

Needle Valve And Seat

Remove needle valve to inspect. If carburetor is gummy or dirty, remove seat to allow better cleaning of metering holes, Fig. 198. Use only compressed air to clean metering holes. Do not resize metering holes.

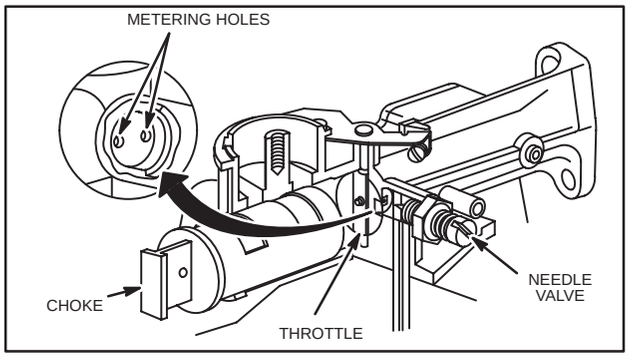

Fig. 198 – METERING HOLES

Pump Disassembly And Repair

Remove fuel pump cover, diaphragm, spring and cup, Fig. 199. Inspect diaphragm for punctures, cracks and fatigue. Replace if damaged. New cup supersedes old style. Smooth side of cup must rest against diaphragm. This prevents spring from cutting diaphragm. When installing the pump cover, tighten the screws evenly in staggered sequence to ensure a good seal. Inspect all sealing surfaces for nicks or damages and repair or replace as required.

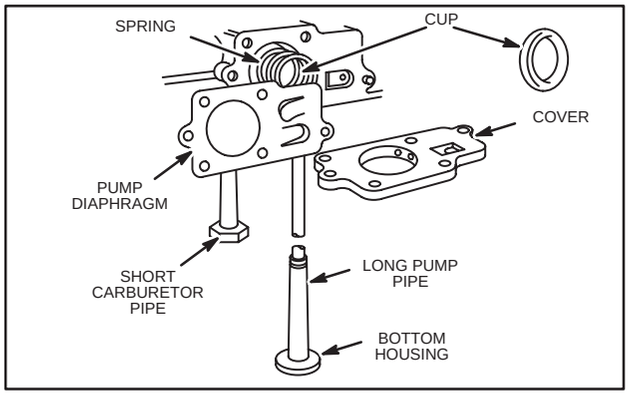

Fig. 199 – PULSA-JET CARBURETOR

CHOKE-A-MATIC® Linkage

Disassembly (Except Model 100900, 130900, 131900)

To remove choke link, remove speed adjustment lever and stop switch insulator plate. Remove speed adjustment lever from choke link then pull out choke link through hole in choke slide, Fig. 200.

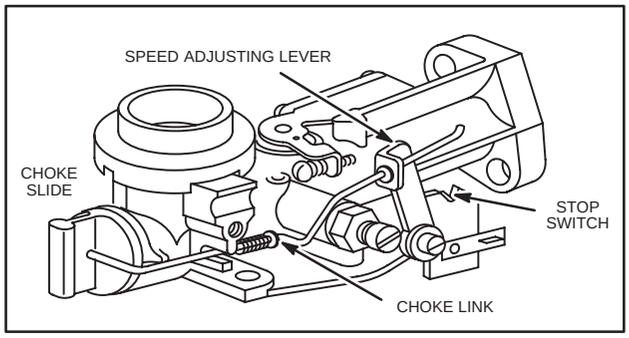

Fig. 200 – CHOKE-A-MATIC® LINKAGE

To Repair

Replace worn or damaged parts. To assemble, slip washers and spring over choke link, Fig. 201. Hook choke link through hole in choke slide. Place other end of choke link through hole in speed adjustment lever and mount lever and stop switch insulator plate to carburetor.

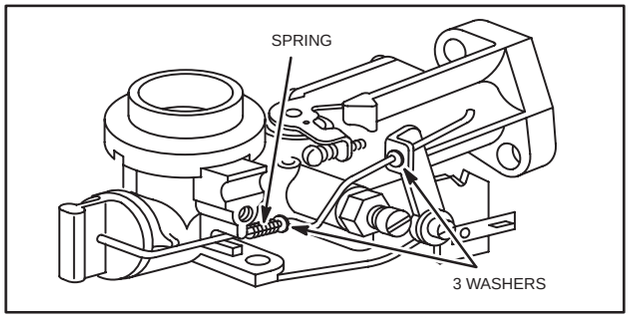

Fig. 201 – CHOKE-A-MATIC® LINKAGE

To Adjust CHOKE-A-MATIC® Linkage

The following covers CHOKE-A-MATIC® parts installed as a part of the carburetor assembly. See this section for CHOKE-A-MATIC® remote controls.

To check operation of CHOKE-A-MATIC® linkage, move speed adjustment lever to "CHOKE" position. If choke slide does not fully close, replace link or use flat nose pliers to bend choke link, Fig. 202 (do not over bend). Speed adjustment lever must make good contact against stop switch when moved to stop position.

AIR CLEANERS, CARBURETORS & GOVERNORS, (cont'd)

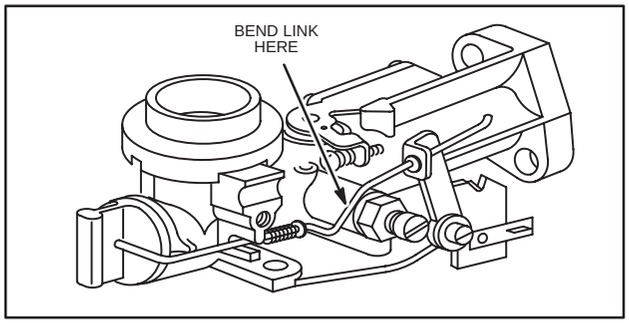

Fig. 202 – ADJUST CHOKE LINK

CHOKE-A-MATIC® Remote Controls

See this section for illustrations by engine model.

To Install Carburetor Except Model Series 100900, 130900, and 131900

Install carburetor and tank as one assembly on engine. Hook throttle link into carburetor throttle and governor blade (for various illustrations, see Section 4). Raise carburetor into place, insert a new gasket and fasten with mounting screws. Install governor spring, Fig. 203. Install stop switch wire and remote control where used.

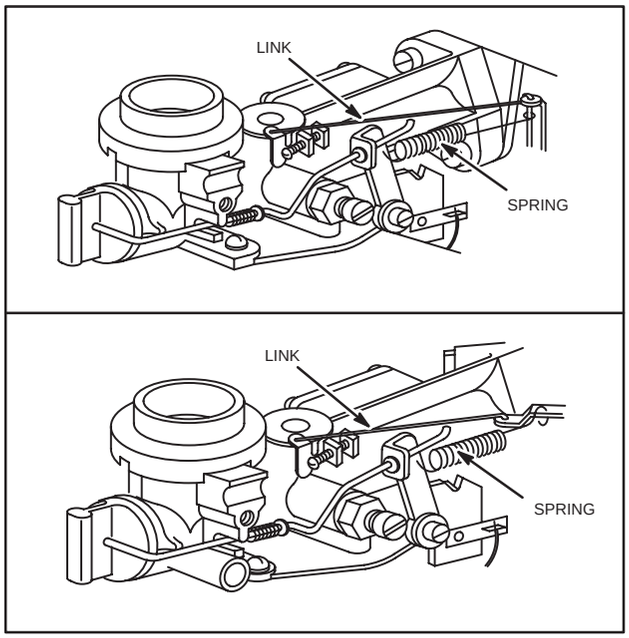

Fig. 203 – INSTALLING GROUND WIRE

To Install Throttle

Cast throttles, Fig. 204, Ill. 1, are removed by backing off the idle speed adjustment screw until the throttle clears the retaining lug on the carburetor body, Fig. 205.

Stamped throttles, Fig. 204, Ill. 2, are removed by using a Phillips screwdriver to remove the throttle valve and screw. After removal of the valve, the throttle may be lifted out, Fig. 205. Reverse procedure to install, Fig. 206.

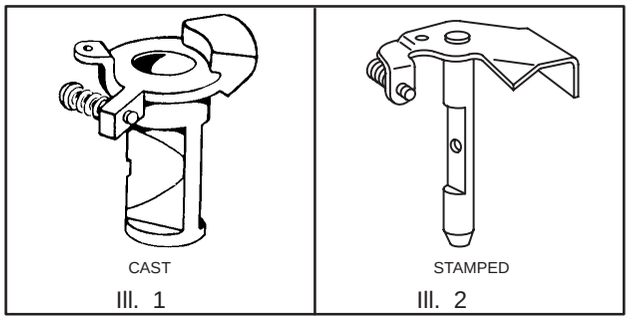

Fig. 204 – THROTTLE TYPES

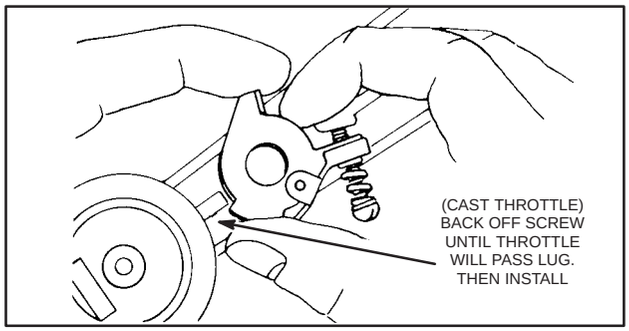

Fig. 205 – INSTALLING OLD STYLE THROTTLES

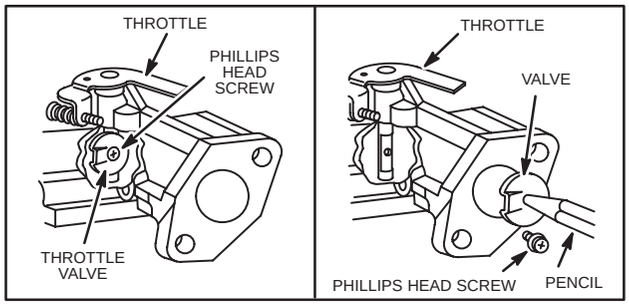

Fig. 206 – REMOVING AND INSTALLING NEW STYLE THROTTLES

Carburetor Adjustment

Turn needle valve clockwise until it just closes.

NOTE: Valve may be damaged by turning it in too far.

Now open needle valve one turn counterclockwise, Fig. 207. This initial adjustment will permit the engine to be started and warmed up prior to final adjustment.

WARNING: All carburetor adjustment must be made with the air cleaner on engine and with fuel tank 1/2 full.

AIR CLEANERS, CARBURETORS & GOVERNORS, (cont'd)

Final Adjustment

Place governor speed control lever in "FAST" position. Turn needle valve in until engine misses (clockwise – lean mixture) then turn it out past smooth operation point until engine runs unevenly (rich mixture). Now turn needle valve to the midpoint between rich and lean so the engine runs smoothly. Next, adjust idle RPM. Rotate throttle counterclockwise and hold against stop. Adjust idle speed adjusting screw to obtain 1750 RPM. Release throttle – engine should accelerate without hesitation or sputtering. If engine does not accelerate properly, the carburetor should be re-adjusted, usually to a slightly richer mixture.

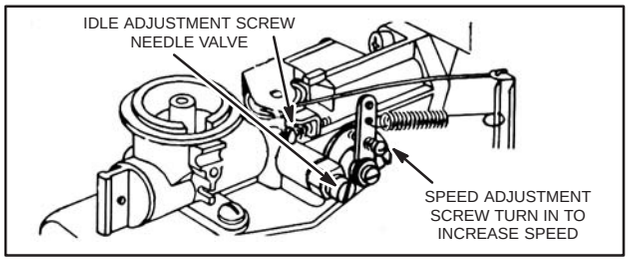

Fig. 207 – SETTING NEEDLE VALVE

NOTE: When starting a Pulsa-Jet engine for the first time, fill fuel tank completely full. This eliminates priming the fuel pump, thus ensuring a quick start.

Zinc Carburetor Body

Remove and discard "O"-ring. Remove and inspect needle valve, packing and seat. Metering holes in carburetor body should be cleaned with solvent and compressed air. Do not alter size of holes, Fig. 208.

Always remove all nylon and rubber parts if carburetor is soaked in solvent.

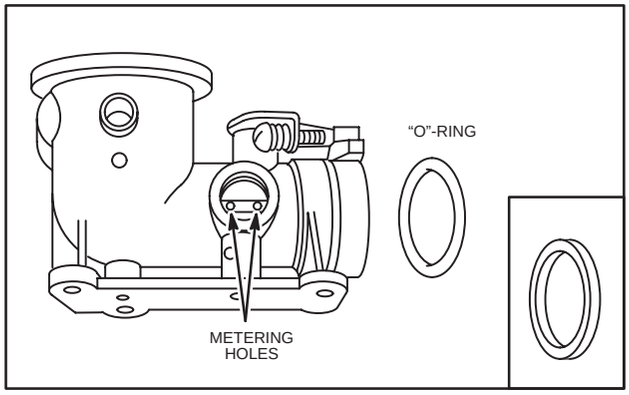

Fig. 208 – METERING HOLES AND "O"-RING

Inspection And Repair

Check all parts for wear and replace as needed. Examine fuel pipe screens for gum deposits and dirt. Replace if dirty. Replace diaphragm if worn, torn, punctured or stiff. Inspect mixture adjustment needle, Fig. 209, and replace if damaged.

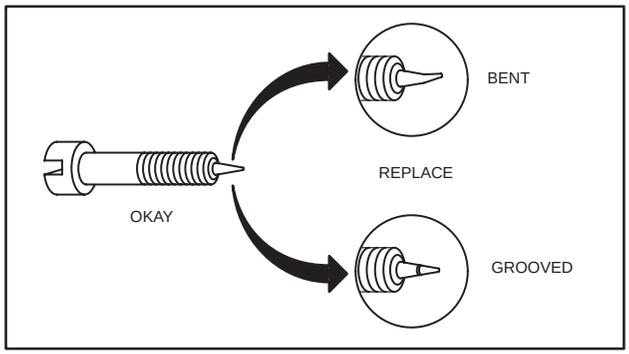

Fig. 209 – MIXTURE NEEDLE

Carburetor Assembly, Zinc and "Minlon®"

When assembling carburetor, use new "O"-rings, gaskets and/or diaphragms. Install choke plate and choke shaft. Choke shaft lever should be as shown in Fig. 210, Ill. I, II, or III.

AIR CLEANERS, CARBURETORS & GOVERNORS, (cont'd)

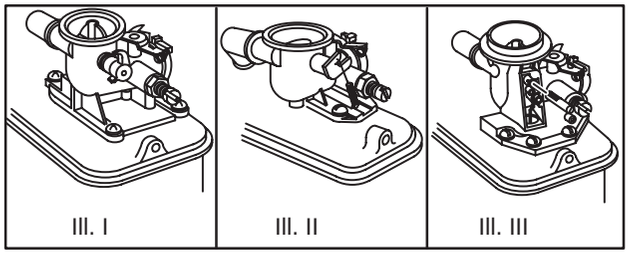

Fig. 210 – CHOKE LEVER

On zinc carburetors, install needle valve seat being sure not to cause burrs in slot. Then install needle valve assembly, Fig. 211.

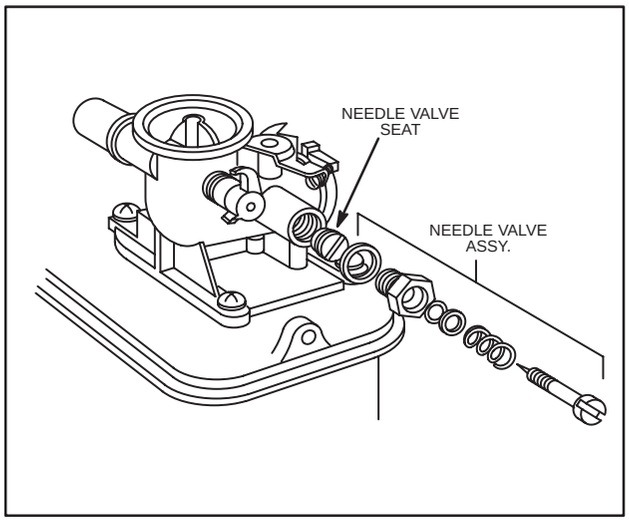

Fig. 211 – NEEDLE VALVE ASSEMBLY, ZINC BODY

Place "O"-ring in groove in throttle bore. Early "O"-rings had a square cross section. Current "O"-rings have a round cross section, Fig. 212.

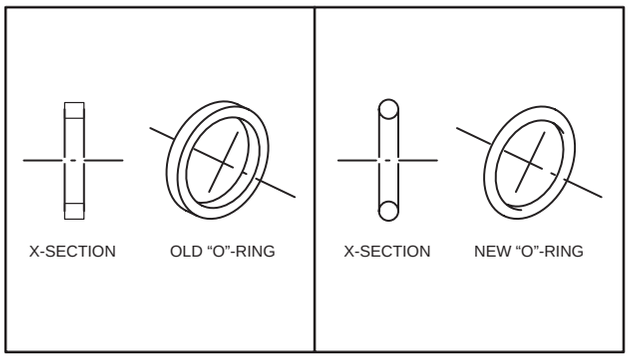

Fig. 212 – "O"-RING

To Install Carburetor And Tank Assembly CHOKE-A-MATIC®, Model Series 82000, 92000, Pulsa-Jet

Put a light film of oil on "O"-ring in throttle bore. With the governor link hooked to the governor blade, connect link to the throttle and slip carburetor into place. Align carburetor with the intake tube and breather tube grommet. Hold choke lever as shown in Fig. 213, so it does not catch on control plate. Be sure the "O"-ring in the carburetor does not distort when fitting the carburetor to the intake tube. Install mounting bolts. Fig. 214 shows routings of stop switch wires.

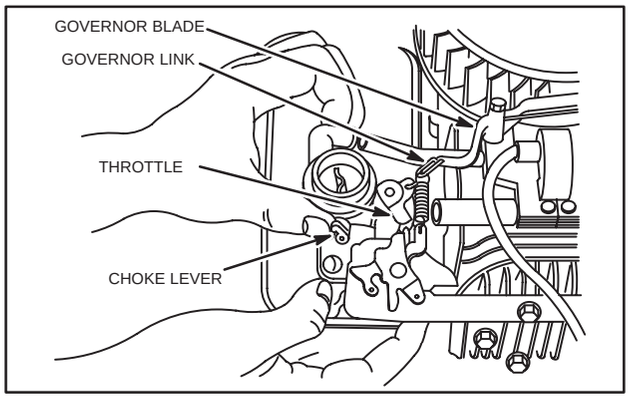

Fig. 213 – INSTALL CARBURETOR AND TANK ASSEMBLY

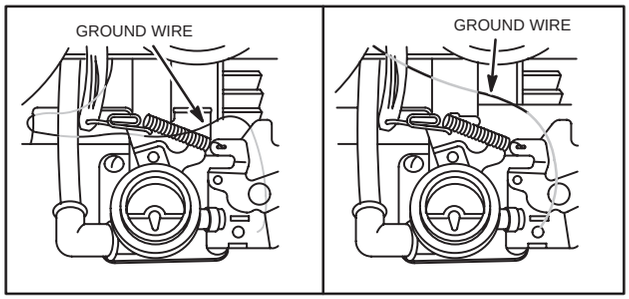

Fig. 214 – STOP SWITCH WIRES

WARNING: When making carburetor adjustments on Vacu-Jet and Pulsa-Jet carburetors, the air cleaner and stud must be installed on the carburetor.

Initial Adjustment: Turn needle valve clockwise to close it. Then open 1-1/2 turns. This initial adjustment will permit the engine to be started and warmed up before making final adjustment.

Final Adjustment

Final Adjustment: Place governor speed control lever in "FAST" position. Turn needle valve in until engine misses (clockwise – lean mixture) then turn needle valve out (counterclockwise) 3/8 turn.

Next, adjust idle RPM. Rotate throttle counterclockwise and hold against stop. Adjust idle speed adjusting screw to obtain 1750 RPM. Release throttle – engine should accelerate without hesitation or sputtering. If engine does not accelerate properly, the carburetor should be re-adjusted, usually to a slightly richer mixture.

AIR CLEANERS, CARBURETORS & GOVERNORS, (cont'd)

Breather and Fuel Intake Tubes

Breather tube and fuel intake tube thread into the cylinder on Model Series 82000, Fig. 215.

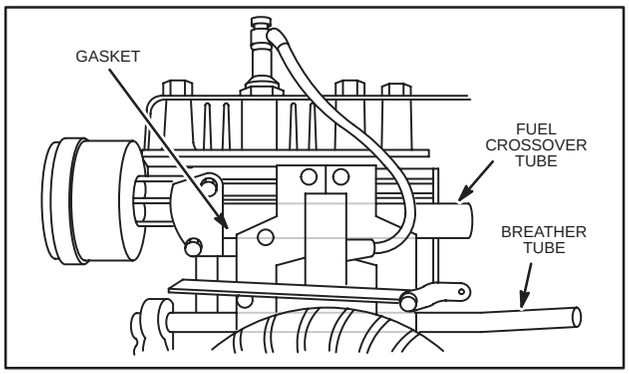

Fig. 215 – BREATHER AND FUEL INTAKE TUBES

CHOKE-A-MATIC® Adjustment

The CHOKE-A-MATIC® feature was standard on Model Series 82000, 92500 (type nos. lower than 0600) 92900 (type nos. lower than 0500) engines. The remote control must be of the type in which the control wire moves out of the casing, when the control lever is moved from the "STOP" position to the "CHOKE" or "START" position. A minimum travel of 1-3/8" is required when the remote control is mounted, Fig. 216.

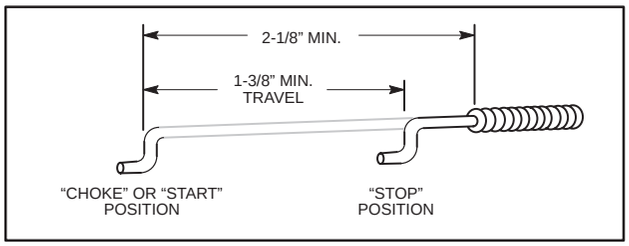

Fig. 216 – REMOTE CONTROL

To install remote control assembly proceed as follows:

Remove the air cleaner and move the control lever to a position about midway between idle and fast. Then mount the remote control with the casing clamp as shown in Fig. 217.

Place control lever on equipment in "FAST" (high speed) position. CONTROL MUST BE MOUNTED ON EQUIPMENT TO MAKE AN ACCURATE ADJUSTMENT. Lever "A" on carburetor should be just touching choke shaft at "B." Move casing "D" forward or backwards until correct position is obtained. Tighten screw "C." Recheck operation of controls after adjustment, Fig. 217.

Carburetor Adjustment

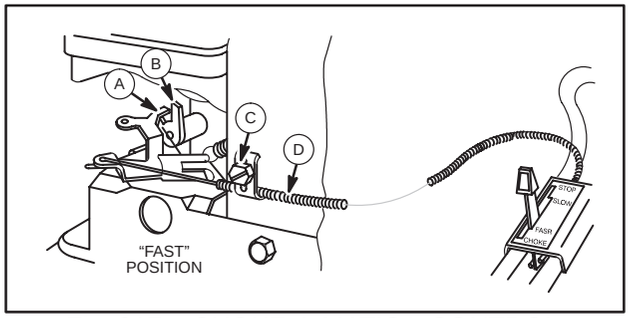

Fig. 217 – CHOKE-A-MATIC® CONTROL, TYPICAL

Pulsa-Jet Model Series 92900, 94900, 110900, 112900, 113900, 114900 Vertical Crankshaft

Carburetor Types

There are two (2) basic types of Pulsa-jet carburetors used on above series engines. They are ① Automatic Choke, and ② CHOKE-A-MATIC®, Fig. 218.

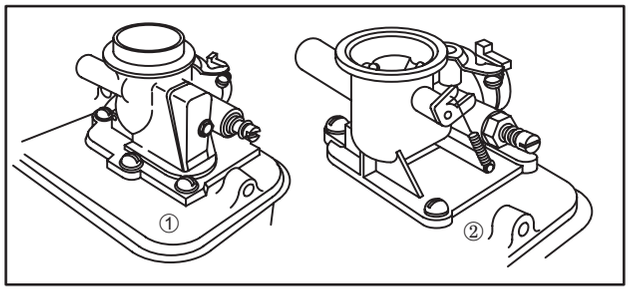

Fig. 218 – PULSA-JET CARBURETORS

Automatic Choke Operation

A diaphragm under carburetor is connected to choke shaft by a link, Fig. 219. A calibrated spring under diaphragm holds choke plate closed when engine is not running.

AIR CLEANERS, CARBURETORS & GOVERNORS, (cont'd)

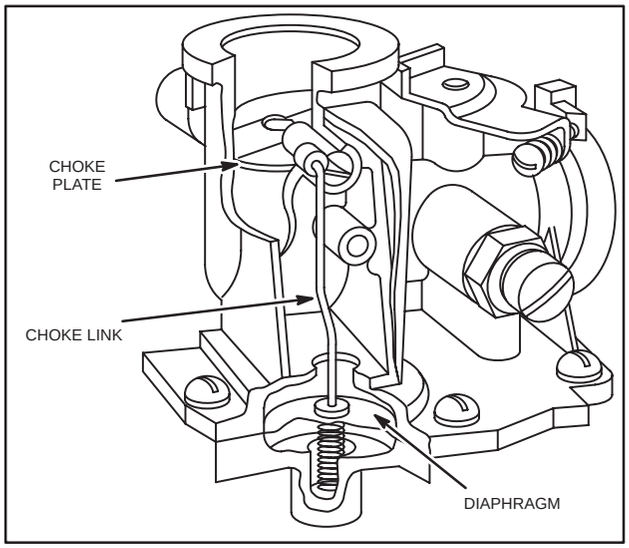

Fig. 219 – AUTOMATIC CHOKE SYSTEM

Upon starting, vacuum created during intake stroke is routed to bottom of diaphragm, through a calibrated passage, thereby opening choke against spring pressure.

This system also has the ability to respond similar to an acceleration pump. As speed decreases during heavy loads, choke plate partially closes enriching mixture, thereby improving low speed performance and lugging power.

Check Automatic Choke

The automatic choke can easily be checked to determine if it is not functioning properly.

1. Remove air cleaner and replace stud. Observe position of choke plate; it should be fully closed.
2. Move speed control to stop position; governor spring should be holding throttle in a closed position. Pull starter rope rapidly. Choke plate should alternately open and close.
3. If engine can be started, install air cleaner and run for two or three minutes, at a normal operating speed. Check to be sure fuel tank is 1/4 full of fuel. Close needle valve to be sure mixture can be made too lean. Adjust needle valve 3/8 turn open from lean position.

Allow engine to run at idle speed for three to five minutes. Again, close needle valve; mixture should become so lean engine will stop. If engine continues to run at idle with needle valve closed, a fuel leak is occurring in one of the following areas: check items 2D, 2H, 2I, 2J and 2K.

If choke plate does not react as stated in Steps 1, 2, and 3, carburetor will have to be disassembled to determine problem. (See Repair Procedure below.)

The following list is given to aid you in checking performance of All-Temperature/Automatic Choke and automatic choke carburetion systems.

1. Engine Appears to be Under-Choked –
   - A. Carburetor adjusted too lean
   - B. Bent air cleaner stud
   - C. Sticking choke shaft due to dirt, etc.
   - D. Choke spring damaged or too short (See Repair Procedure.)
   - E. Diaphragm not pre-loaded (See Repair Procedure.)
2. Engine Appears to be Over-Choked
   - A. Carburetor adjusted too rich
   - B. Bent air cleaner stud
   - C. Sticking choke shaft due to dirt, etc.
   - D. Ruptured diaphragm
   - E. Vacuum passage restricted
   - F. Choke spring distorted, stretched, etc.
   - G. Gasoline or oil in vacuum chamber
   - H. Leak between link and diaphragm
   - I. Diaphragm folded during assembly, causing vacuum leak
   - J. Machined surface on tank top not flat (See Repair Procedure.)
   - K. Needle valve seat loose

If engine on a mower with a high-inertia disc type cutter blade becomes hard starting when engine is warm, a leaner carburetor mixture may be required. See following note:

NOTE: A heavy, high-inertia disc type cutter blade rotates for a longer period of time, after governor control is placed in "STOP" position. During this "coasting" period, engine continues to induct fuel-air mixture, even when choke is open.

If carburetor mixture is too rich, warm engine may flood and become hard starting. If original carburetor adjustment has not been changed, turn needle valve clockwise (leaner) approximately 1/8 turn. If original carburetor adjustment has been changed, check previous list, this page, paragraph No. 2-A, B and C, then adjust 1/8 turn leaner.

AIR CLEANERS, CARBURETORS & GOVERNORS, (cont'd)

To Remove Carburetor and Fuel Tank Pneumatic Governor

1. Remove carburetor and fuel tank assembly mounting bolts, Fig. 220.

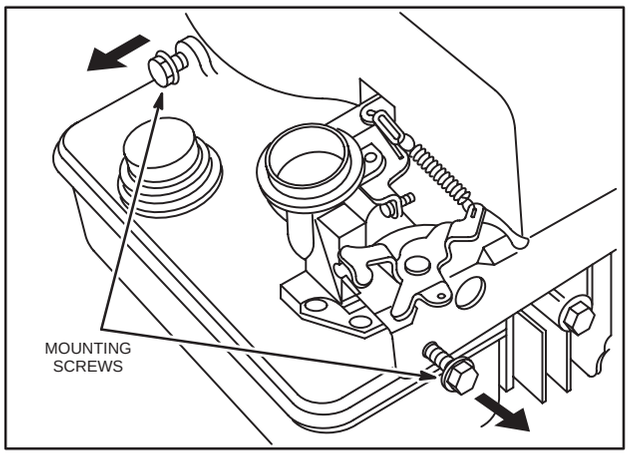

Fig. 220 – REMOVING MOUNTING SCREWS

2. Slip carburetor and fuel tank assembly off end of fuel intake tube and turn assembly to free throttle link from throttle lever.

3. This will leave governor link and governor spring connected to governor blade and control lever, Fig. 221.

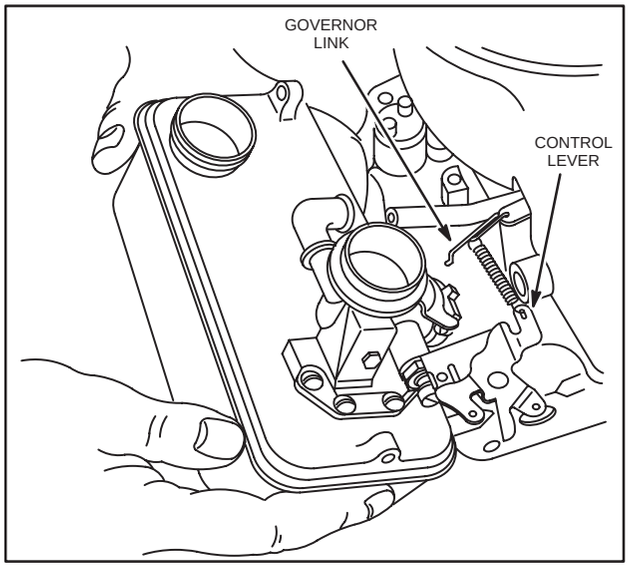

Fig. 221 – REMOVING CARBURETOR AND TANK ASSEMBLY

Remove Carburetor and Tank – (Mechanical Governor), Model Series 92900, 94000, 95000, 112900, 113900, and 114900, Vertical Crankshaft

1. Disconnect governor spring from control lever.

2. Slide carburetor and fuel tank assembly off end of fuel intake tube and turn assembly to disconnect governor link from bell crank lever.

3. This will leave governor spring and bell crank assembly on carburetor and fuel tank assembly, Fig. 222.

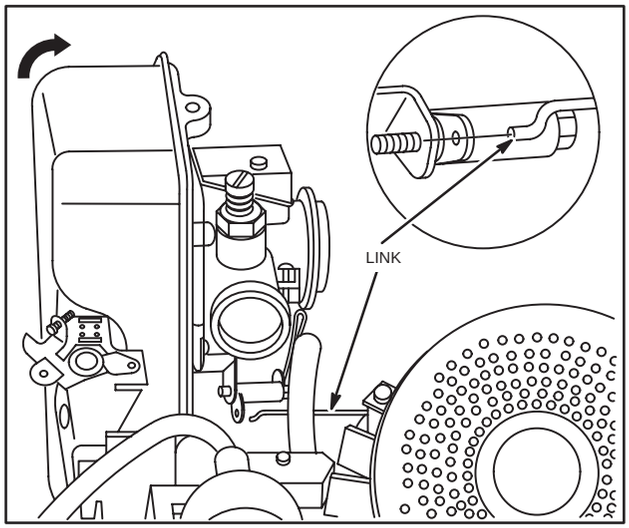

Fig. 222 – REMOVING FUEL TANK ASSEMBLY

Remove Carburetor and Tank – Model 100900, 130900, 131900, Vertical Crankshaft

1. Disconnect stop switch wire and governor spring.

2. Remove two cylinder head bolts or studs and rear tank mounting screw.

3. Slip carburetor over notch in cylinder shield and away from intake manifold, Fig. 223. Rotate carburetor and tank assembly to disconnect governor link from throttle lever.

NOTE: On some models, it may be necessary to remove blower housing.

AIR CLEANERS, CARBURETORS & GOVERNORS, (cont'd)

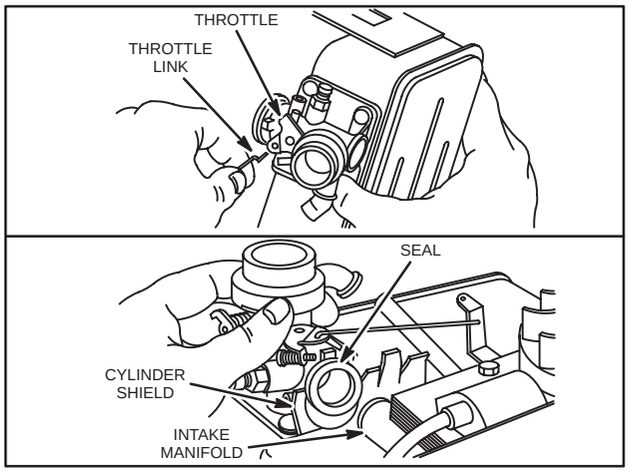

Fig. 223 – REMOVING CARBURETOR MODEL SERIES 100900, 130900, 131900, VERTICAL CRANKSHAFT

To Remove Carburetor from Fuel Tank, Model Series 92000, 93000, 94000, 95000, 96000, 110900, 111900, 112900, 113900, and 114900

1. Remove screws holding carburetor on tank body.

NOTE: On Model Series 110900, 111900, 113900, and 114900 a mounting screw may be located under choke plate. To gain access to screw, open choke plate completely. Use a #2 Phillips head screwdriver to remove screw, Fig. 224.

NOTE: On Model Series 100900, 130900, and 13190, the CHOKE-A-MATIC® valve lever is operated by the carburetor control plate. Removing the plate is all that is required.

2. Lift carburetor straight up.

3. Remove pump spring, spring cup (when used) and diaphragm.

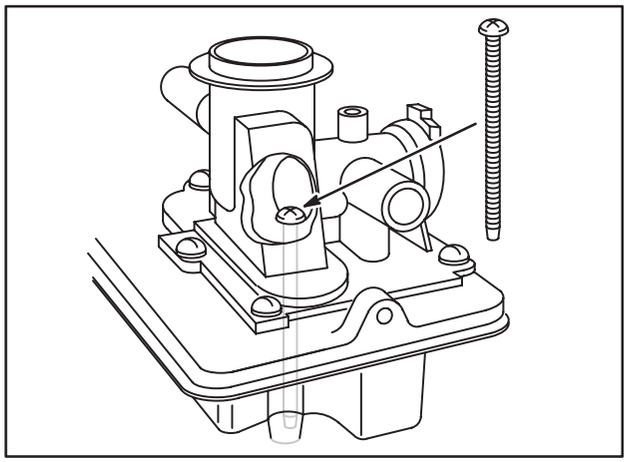

Fig. 224 – SCREW UNDER CHOKE PLATE

To Disassemble Pulsa-Jet Carburetor

To Remove Automatic Choke

1. To remove choke parts, first remove automatic choke link cover.

2. Then slide choke link out choke shaft lever. Pull shaft out of plate, Fig. 225.

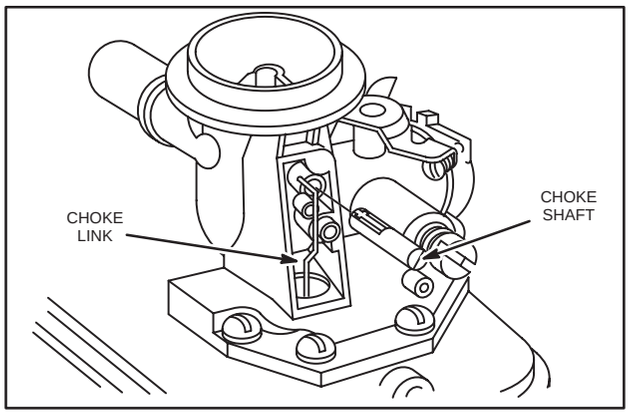

Fig. 225 – REMOVING AUTOMATIC CHOKE, TYPICAL

Remove Needle Valve Assembly – Screw-in-Type

1. Remove and discard "O"-ring, Fig. 226.

2. Remove and inspect needle valve, and seat.

3. Metering holes in carburetor body should be cleaned with solvent and compressed air only.

4. DO NOT ALTER SIZE OF HOLES, Fig. 226.

AIR CLEANERS, CARBURETORS & GOVERNORS, (cont'd)

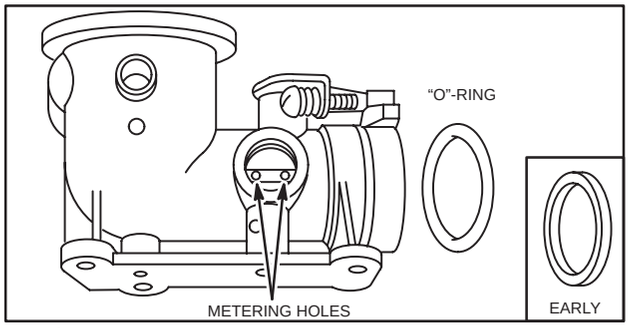

Fig. 226 – METERING HOLES AND "O"-RING, TYPICAL

NOTE: Some zinc carburetors use pressed-in needle valve assembly, Fig. 227. See next subject heading "To Remove Needle Valve Assembly – Pressed-in Type" for removal procedure.

To Remove Needle Valve Assembly Pressed-In Type

1. Remove and discard "O"-ring.
2. Back out mixture adjusting needle about four to five turns counterclockwise.
3. Then pull needle and seat assembly out.
4. Remove inner "O"-ring, Fig. 227.
5. Metering holes in carburetor body should be cleaned with carburetor solvent and compressed air only.

WARNING: Wear eye protection when using compressed air.

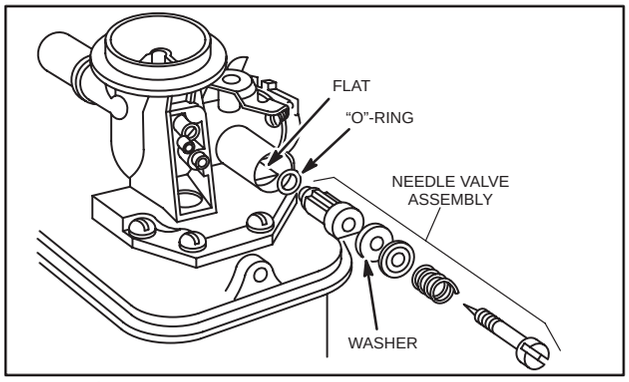

Fig. 227 – NEEDLE VALVE ASSEMBLY, PRESSED-IN-TYPE

To Remove Throttle Plate and Shaft

Throttle shaft, Fig. 228, is removed by backing out idle speed adjusting screw and using a Phillips or straight blade screwdriver to remove throttle plate screw. After removal of plate, throttle shaft may be lifted out, Fig. 229.

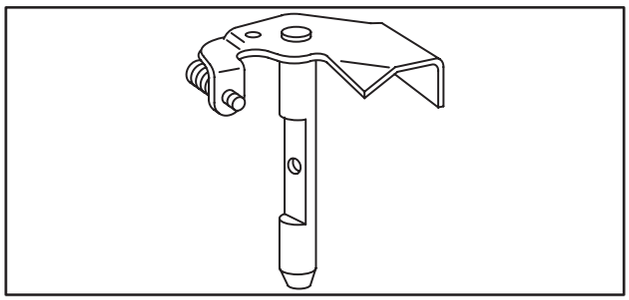

Fig. 228 – THROTTLE SHAFT AND LEVER

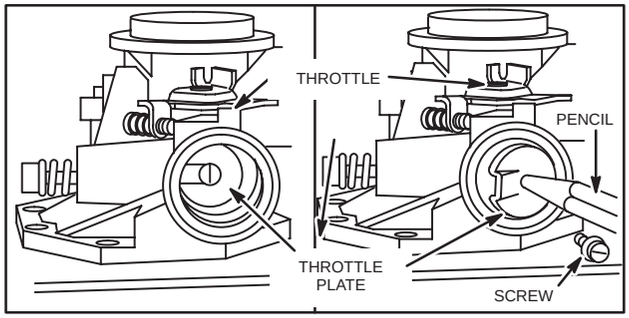

Fig. 229 – REMOVING THROTTLE, TYPICAL

To Remove Fuel Pick-Up Tubes – Zinc Carburetors, Model Series 92000, 110900, 111900, 112900, 113900, 114900, 130900, 131900, Vertical Crankshaft

Short nylon fuel pipes are threaded into carburetor body. To remove, use socket as shown in Fig. 230.

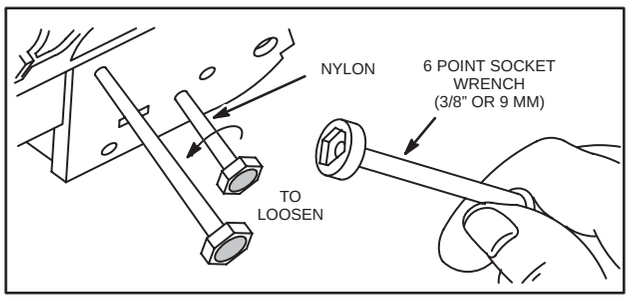

Fig. 230 – REMOVING NYLON FUEL PICK-UP TUBES

Breather and Intake Manifold

Intake manifold is held with with screws to cylinder on Model Series 92000, 93000, 94000, 95000, 110900, 111900, 112900, 113900, and 114900, Fig. 231. Check for good fit or damaged gaskets to prevent air leaks or entry of dirt.

NOTE: When installing reinforced plastic or metal intake manifold and new gasket, torque screws to 30 in. lbs. (3.4 Nm).

AIR CLEANERS, CARBURETORS & GOVERNORS, (cont'd)

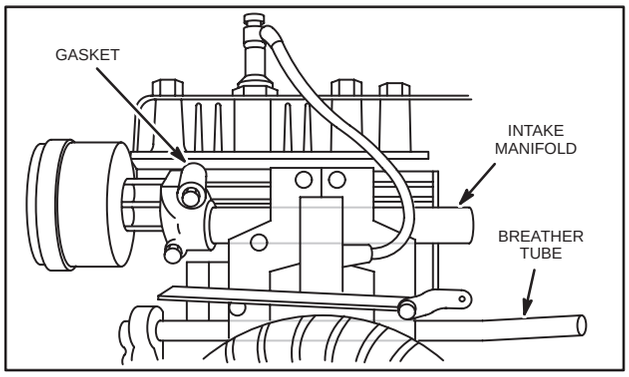

Fig. 231 – BREATHER TUBE AND INTAKE MANIFOLD, TYPICAL

To Remove Nylon Choke Plate and Shaft Model Series 92000, 100900, 130900, 131900, Vertical Crankshaft

1. To remove choke parts, first disconnect choke return spring (when used), Fig. 232.
2. Then pull nylon choke shaft sideways to separate choke shaft from choke plate.

NOTE: If choke plate is heat-sealed to choke shaft, loosen by sliding sharp pointed tool along edge of choke shaft.

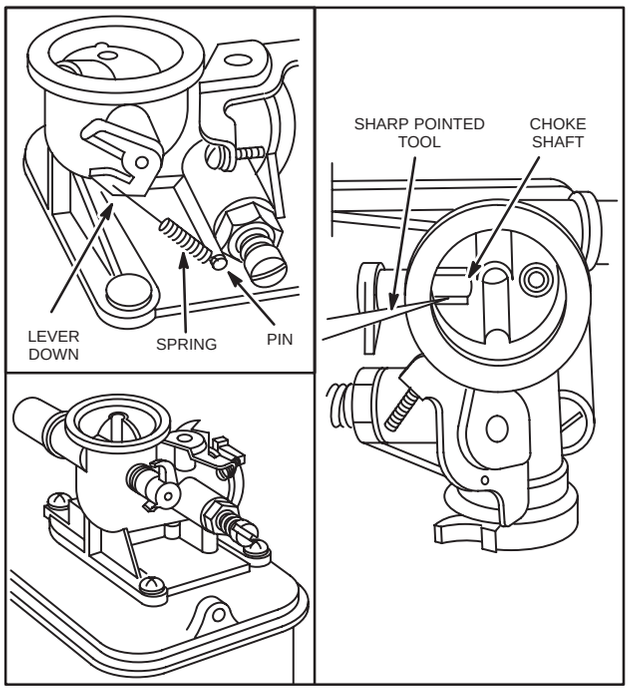

Fig. 232 – CHOKE SHAFT AND PLATE – CHOKE-A-MATIC®

Inspection And Repair

Check all parts for wear and replace as needed. Examine fuel pipe screens for gum deposits and dirt. Replace if dirty. Replace diaphragm if worn, torn, punctured or stiff. Inspect mixture adjustment needle, Fig. 233, and replace if damaged.

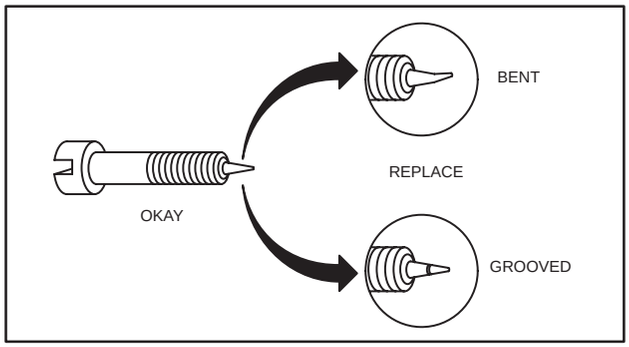

Fig. 233 – MIXTURE NEEDLE

To Inspect Tank

After removal of carburetor from fuel tank, inspect tank for presence of water and deposits of dirt, rust, gum, and/or varnish.

To Check Diaphragm and Spring

The diaphragm is suitable for further use, provided it has not developed wear spots, become stiff, or has punctures. Check to ensure fuel pump flapper valves are not damaged.

Also check choke spring length, Table No. 11.

Table No. 11

DIAPHRAGM SPRING LENGTH		
Color	**Minimum Length**	**Maximum Length**
None	15/16" (23.8 mm)	1" (25.4 mm)
Red	1–1/8" (28.6 mm)	1–7/32" (30.9 mm)
Blue	1–5/16" (33.3 mm)	1–3/8" (35 mm)
Green	1–7/64" (28.2 mm)	1–3/8" (35 mm)

NOTE: If spring length is shorter or longer than specified, replace diaphragm and spring.

AIR CLEANERS, CARBURETORS & GOVERNORS, (cont'd)

To Check Tank Top

Machine surface on top of fuel tank must be flat in order for diaphragm to provide an adequate seal between carburetor and tank. If machined surface on tank is not flat, it is possible for gasoline to enter vacuum chamber by passing between machined surface and diaphragm. Once fuel has entered vacuum chamber, it can move through vacuum passage and into carburetor.

Flatness of machined surface on tank top can be checked by straight edge and feeler gauge, as shown in Fig. 234. A .002" (.05 mm) feeler gauge should not enter between straight edge and machined surface, when checking at shaded areas shown, Fig. 234. Replace tank if gauge enters.

NOTE: STRAIGHT EDGE MUST BE ACCURATE. Do not file tank top to restore flatness, this will cause carburetor to run even richer.

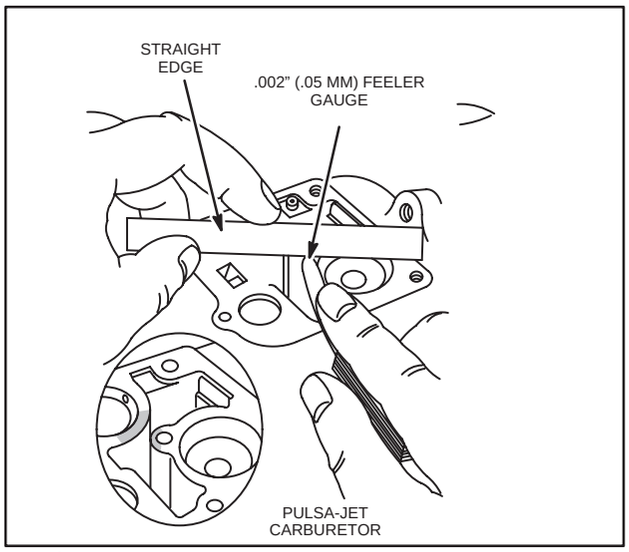

Fig. 234 – CHECKING TANK TOP FLATNESS

Repair kit #391413 may be used to repair Pulsa-Jet fuel tanks which are not flat. Install roll pin and Teflon washer as shown in Fig. 235.

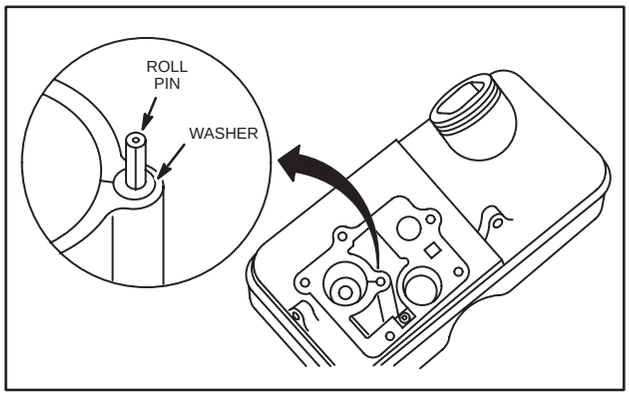

Fig. 235 – INSTALLING ROLL PIN AND TEFLON WASHER

To Assemble Pulsa-Jet Carburetor

To Install Fuel Pick-Up Tubes, Zinc Bodies

Thread fuel pipes into carburetor body using either a 3/8" or 9/16" wrench or socket, Fig. 236. No sealant is required on threads of fuel pipes.

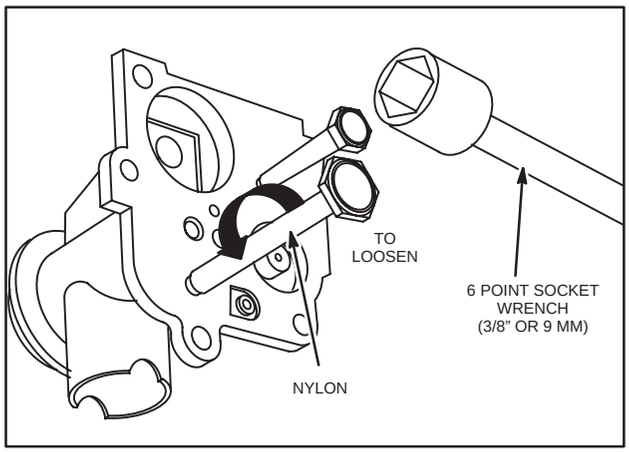

Fig. 236 – INSTALLING FUEL PICK-UP TUBE

To Install Throttle Shaft and Plate

Throttle shaft, Fig. 237, is installed by using a Phillips or straight blade screwdriver to install throttle plate screw, Fig. 238.

AIR CLEANERS, CARBURETORS & GOVERNORS, (cont'd)

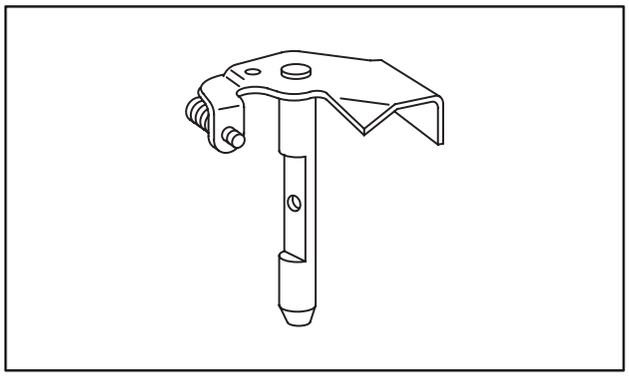

Fig. 237 – THROTTLE SHAFT AND LEVER, TYPICAL

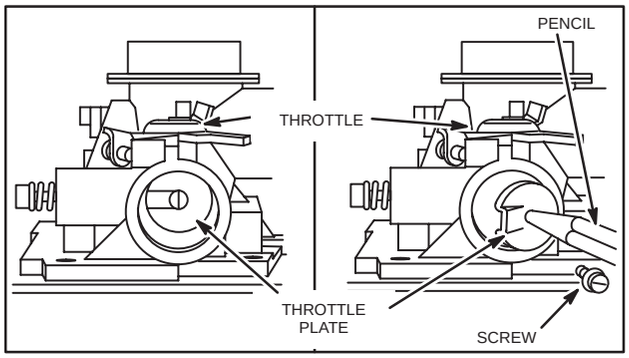

Fig. 238 – INSTALLING THROTTLE, TYPICAL

To Assemble Automatic Choke

1. Place choke plate in throat of carburetor placing short shaft in hole next to breather inlet.

2. Insert choke shaft into choke shaft bore with automatic choke link hole positioned as shown in Fig. 239.

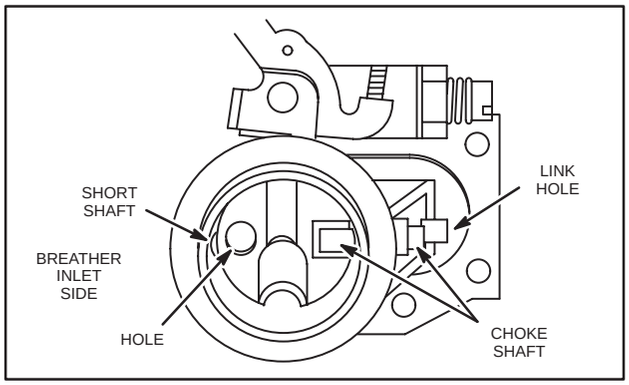

Fig. 239 – ASSEMBLING AUTOMATIC CHOKE

To Assemble Carburetor Choke Shaft, CHOKE-A-MATIC® – Model Series 92000

1. When assembling carburetor, use new "O"-rings, gaskets and/or diaphragms.

2. Install choke plate and choke shaft.

3. Choke shaft lever should be as shown in Fig. 240.

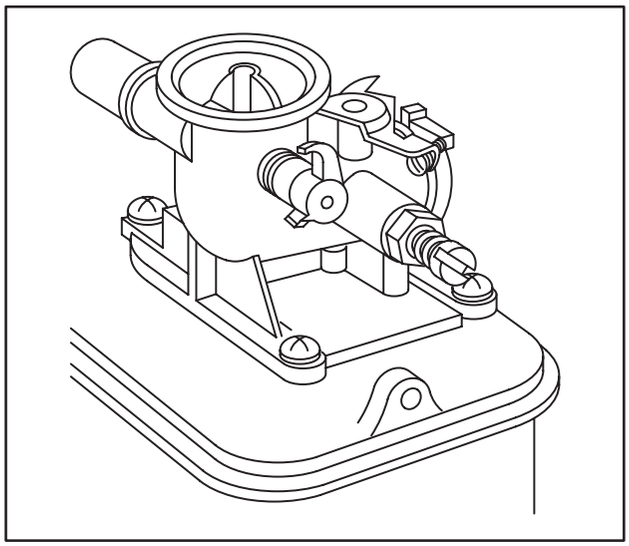

Fig. 240 – CHOKE LEVER POSITION

4. If a new diaphragm is being installed, assemble choke spring to diaphragm, as shown in Fig. 241. See Table No. 12 for correct spring usage. Be careful not to bend or distort spring.

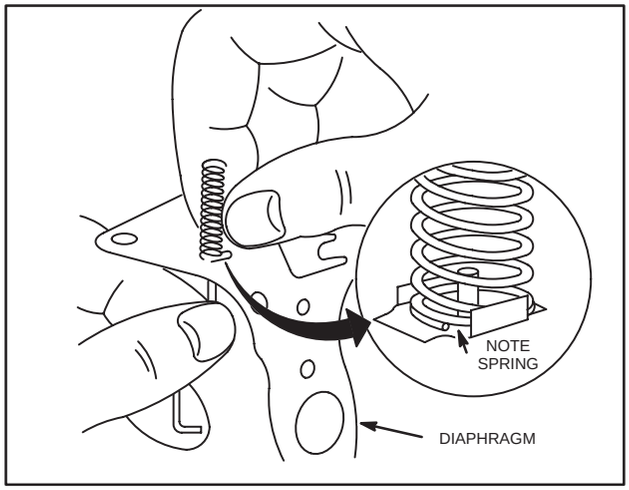

Fig. 241 – ASSEMBLING SPRING TO DIAPHRAGM

AIR CLEANERS, CARBURETORS & GOVERNORS, (cont'd)

Table No. 12

DIAPHRAGM SPRINGS WHERE USED BY COLOR		
Carburetor Type	Model Series	
	90000	110000
Pulsa-Jet Automatic Choke	RED, Standard GREEN, See Service Bulletin #533	BLUE, Standard GREEN, See Service Bulletin #533

NOTE: Service Bulletin #533 covered installation of choke plate and choke spring (GREEN) (part #396227) to eliminate problems with hot starting.

To Assemble Carburetor to Fuel Tank

1. Holding carburetor body upside down, place diaphragm on body while guiding choke link thru hole for link. Be sure that pump spring and cap in fuel pump well, Fig. 242.

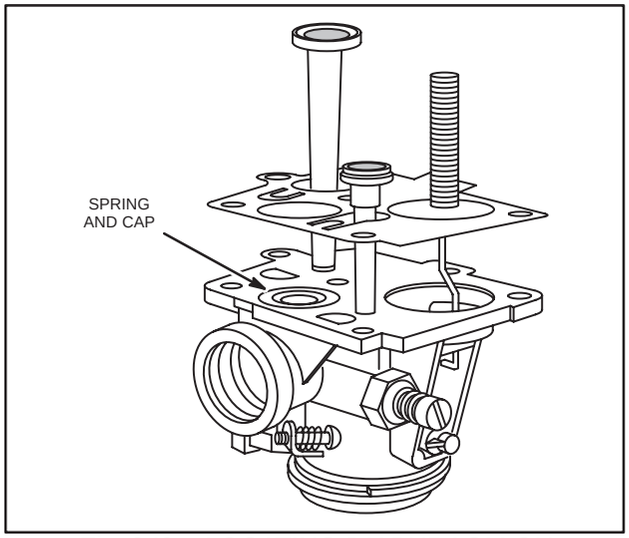

Fig. 242 – LOCATING DIAPHRAGM ON CARBURETOR

2. Lower tank down onto carburetor, while guiding choke spring into spring well, Fig. 243.

3. While holding carburetor and body together, turn assembly right side up.

4. Thread carburetor mounting screws into tank top about two turns. DO NOT TIGHTEN.

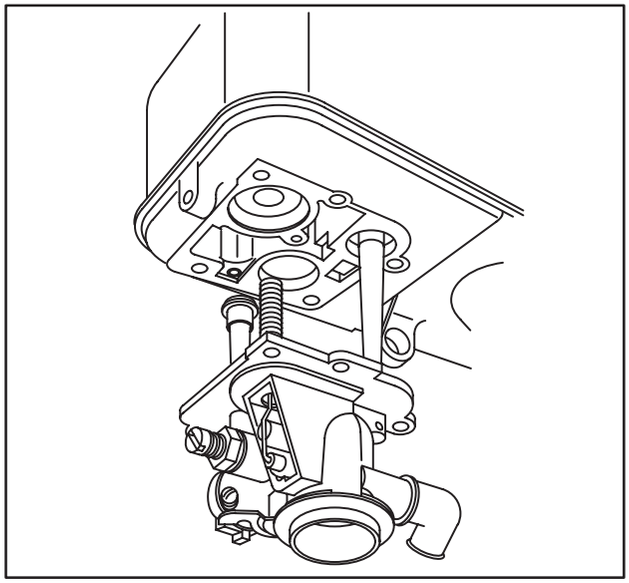

Fig. 243 – ASSEMBLING TANK TO CARBURETOR

5. Close choke plate. Insert choke link into choke shaft as shown, Fig. 244.

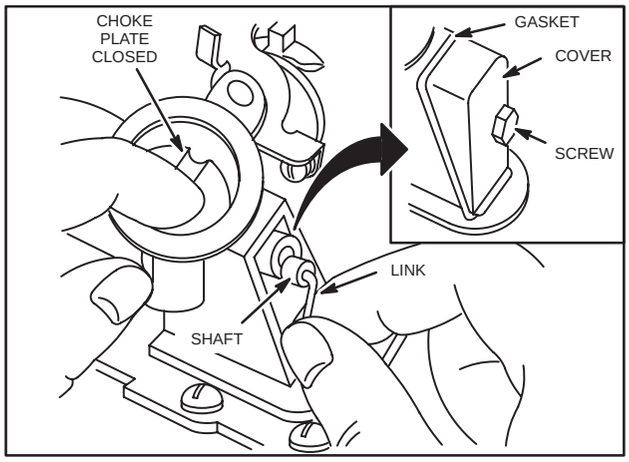

Fig. 244 – INSERTING CHOKE LINK

6. Install rubber elbow and assemble carburetor to fuel tank including pre-loading automatic choke (diaphragm), as described in next paragraph.

AIR CLEANERS, CARBURETORS & GOVERNORS, (cont'd)

To Pre-Load Diaphragm

1. Move choke plate to an over center position as shown in Fig. 245.

2. Hold choke while tightening carburetor mounting screws in a staggered sequence.

NOTE: Opening choke to an over center position places diaphragm in a pre-loaded condition.

3. Move choke plate to normal closed position. Choke plate should now remain fully closed, Fig. 244.

4. If choke plate is not fully closed, check to be sure choke spring is properly assembled to diaphragm, and also properly inserted in its pocket in tank top.

5. Install choke link cover and gasket.

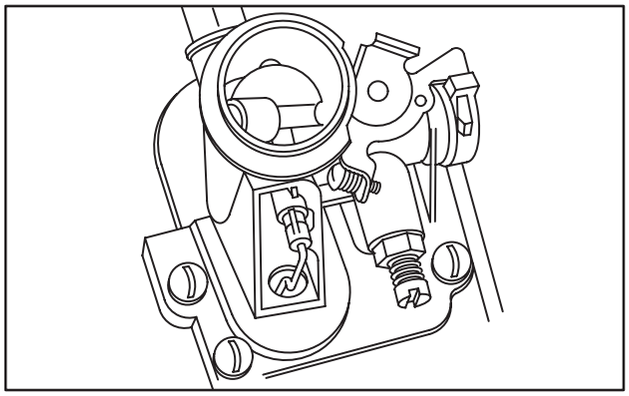

Fig. 245 – PRE-LOADING DIAPHRAGM

To Install Needle Valve Assembly, Screw-in Type

1. Install needle valve seat being using Tool #19062.

2. Then install needle valve assembly, Fig. 246.

NOTE: On zinc carburetor bodies that use pressed-in type needle valve assembly, see next procedure "Install Needle Valve Assembly, Pressed-in Type" and Fig's. 247 and 248.

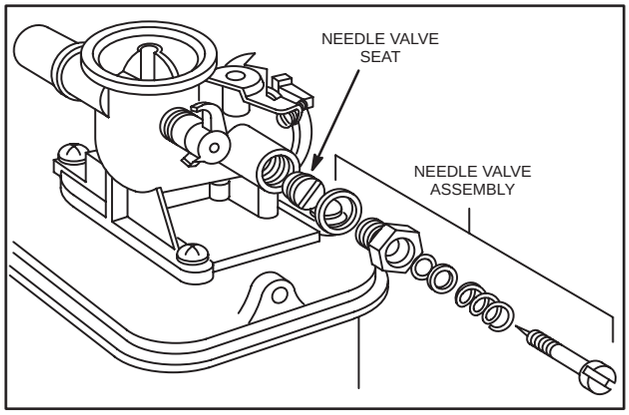

Fig. 246 – NEEDLE VALVE ASSEMBLY, SCREW-IN TYPE

To Install Needle Valve Assembly, Pressed-In Type

1. To install pressed-in type needle valve assembly, place "O"-ring on shoulder of needle seat.

2. Then turn needle in until large seal washer just touches needle seat, Fig. 247.

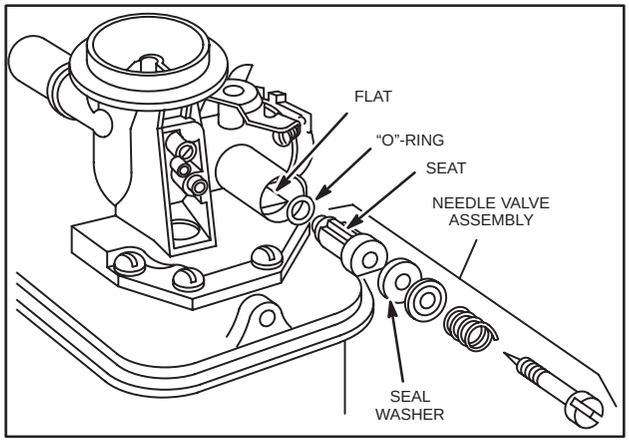

Fig. 247 – NEEDLE VALVE ASSEMBLY, PRESSED-IN TYPE

3. Assemble needle valve assembly and turn screw until it just touches spring.

4. Install needle valve as an assembly being sure flat on valve seat lines up with flat in carburetor body, Fig. 247.

NOTE: On later carburetors, a slot was added to top of needle valve assembly bore to line up with rib on needle valve assembly, Fig. 247.

AIR CLEANERS, CARBURETORS & GOVERNORS, (cont'd)

5. Oil fill tube, Part #280131 will help firmly seat valve assembly, Fig. 248.

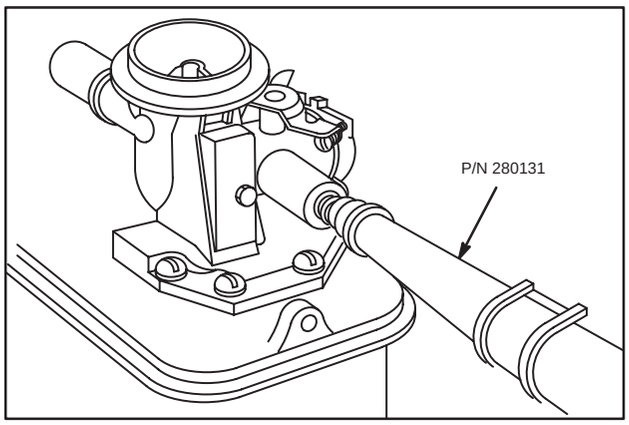

Fig. 248 – ASSEMBLING PRESSED-IN VALVE

NOTE: DO NOT push on the needle valve during installation.

To Install Carburetor and Tank Assembly, Automatic Choke, – Model Series 92000, 110900, 111900, 112900, 113900, 114900 Vertical Crankshaft

1. Apply light film of oil to "O"-ring in throttle bore. Then hook governor link to governor blade.
2. Align carburetor with intake tube and breather tube grommet.
3. Be sure "O"-ring does not distort when fitting carburetor to intake tube. Install governor spring as shown in Section 4, Page 8.

To Install Carburetor and Tank Assembly Pulsa-Jet, CHOKE-A-MATIC® – Model Series 92000, Vertical Crankshaft

1. Put a light film of oil on "O"-ring in throttle bore.
2. With governor link hooked to governor blade, connect link to throttle and slip carburetor into place.
3. Align carburetor with intake tube and breather tube grommet.
4. Hold choke lever as shown in Fig. 249, so it does not catch on control plate.
5. Be sure "O"-ring in carburetor does not distort when fitting carburetor to intake tube.
6. Install mounting bolts. Fig. 250 shows routings of stop switch wires.

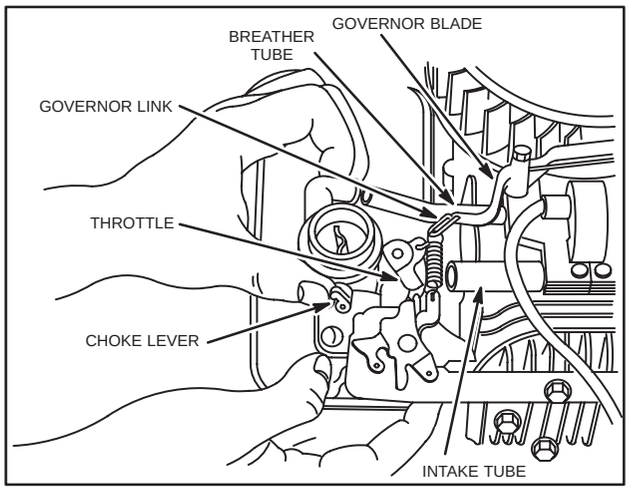

Fig. 249 – INSTALL CARBURETOR AND TANK ASSEMBLY

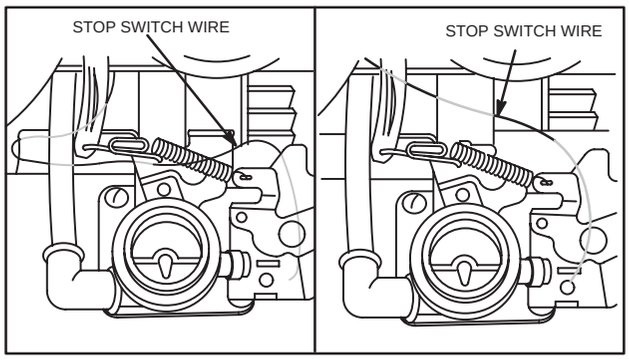

Fig. 250 – STOP SWITCH WIRES

To Install Carburetor and Tank, – Model Series 100900, 130900, and 131900, Vertical Crankshaft

1. Assemble carburetor and new gasket to tank.
2. Hook throttle link to throttle lever, Fig. 251.
3. Slip carburetor over notch in cylinder shield and around intake tube, Fig. 251.
4. Oil seal in carburetor body to prevent damage, when installing.
5. Mount carburetor and tank assembly to cylinder.
6. Torque two head bolts to 140 in. lbs. (15.8 Nm). Install rear tank mounting screw.
7. Hook up stop switch wire and governor spring.

AIR CLEANERS, CARBURETORS & GOVERNORS, (cont'd)

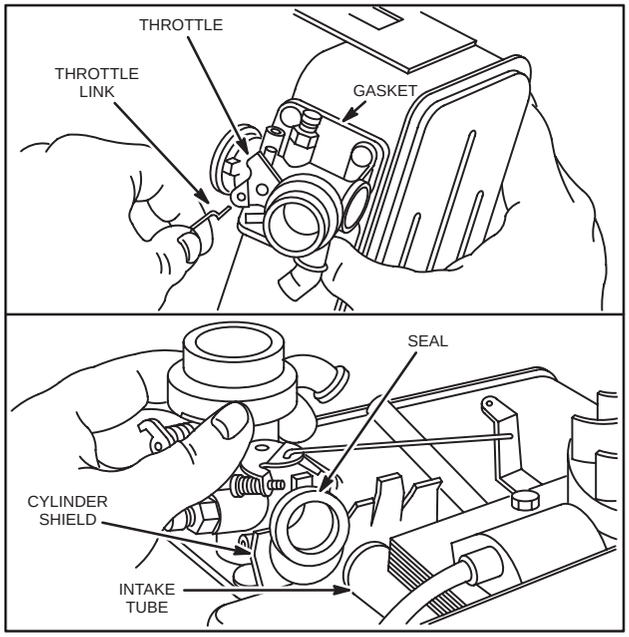

Fig. 251 – INSTALLING CARBURETOR MODEL SERIES 100900, 130900, 131900

To Adjust CHOKE-A-MATIC® – Model Series 92000, Vertical Crankshaft

CHOKE-A-MATIC® is standard on Model Series 92900 (type nos. lower than 0500) engines. Remote control must be of type in which control wire moves out of casing, when control lever is moved from "STOP" position to "CHOKE" or "START" position. A minimum travel of 1–3/8" (35 mm) is required when remote control is mounted, Fig. 252.

1. Remove air cleaner and move control lever to a position about midway between idle and fast.
2. Then mount remote control with casing clamp as shown in Fig. 253.

To adjust remote control assembly proceed as follows:

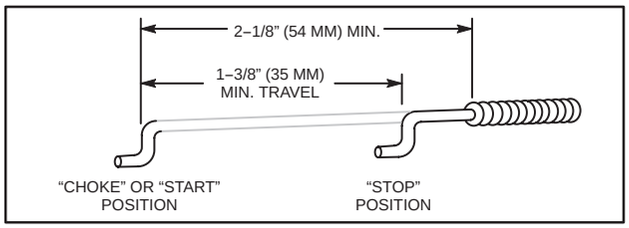

Fig. 252 – REMOTE CONTROL

3. Place control lever on equipment in "FAST" (high speed) position.

NOTE: CONTROL MUST BE MOUNTED ON EQUIPMENT TO MAKE AN ACCURATE ADJUSTMENT.

4. Lever "A" on carburetor should be just touching choke shaft at "B."
5. Move casing "D" forward or backwards until correct position is obtained.
6. Tighten screw "C." Recheck operation of controls after adjustment, Fig. 253.

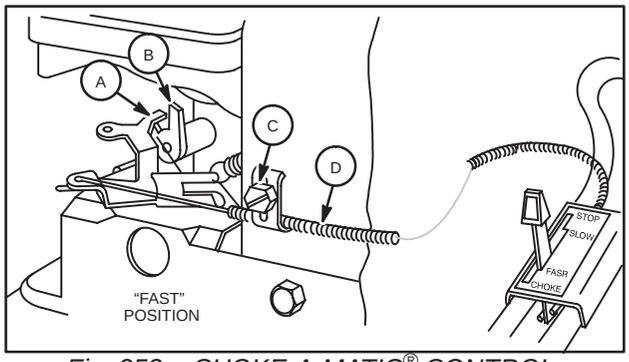

Fig. 253 – CHOKE-A-MATIC® CONTROL, TYPICAL

To Adjust CHOKE-A-MATIC® Bracket Model 100900, 130900, 131900, Vertical Crankshaft

Manual or remote control for choke and stop is done by a lever on control plate mounted to carburetor by two screws "A," Fig. 254. Lever for remote control has a loose fit; for manual control, a friction fit.

1. To check lever action, move lever to left until it snaps into "RUN" detent.
2. Lever "B" should just touch choke lever at "C."
3. If it does not, loosen screws "A" slightly and move control plate to right or left until lever just touches choke lever at "C."
4. Tighten screws.

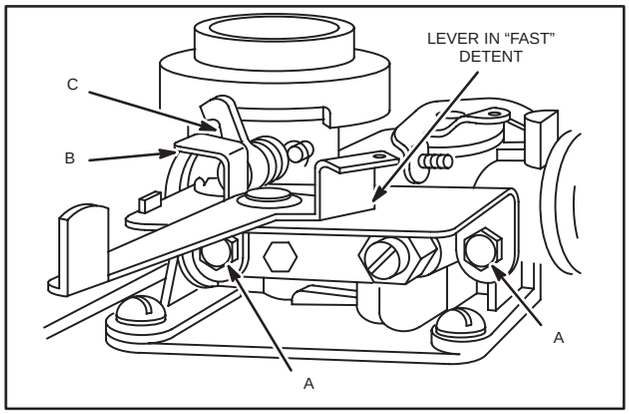

Fig. 254 – CHOKE-A-MATIC® LINKAGE – MODEL SERIES 100900, 130900, 131900

AIR CLEANERS, CARBURETORS & GOVERNORS, (cont'd)

Carburetor Adjustment – Pulsa-Jet Vertical Crankshaft

WARNING: When making carburetor adjustments on Pulsa-Jet carburetors, air cleaner and stud must be installed on carburetor.

Initial Adjustment

1. Turn needle valve clockwise until the needle lightly contacts the seat.
2. Then open 1-1/2 turns. This initial adjustment will permit engine to be started and warmed up before making final adjustment.

Final Adjustment

1. Place governor speed control lever in "FAST" position.
2. Turn needle valve in until engine misses (clockwise-lean mixture) then turn needle valve out (counterclockwise) 3/8 turn, Fig. 255.
3. Rotate throttle counterclockwise and hold against stop.
4. Adjust idle speed adjusting screw to obtain 1750 RPM.
5. Release throttle – engine should accelerate without hesitation or sputtering.
6. If engine does not accelerate properly, carburetor should be re-adjusted, usually to a slightly richer mixture.

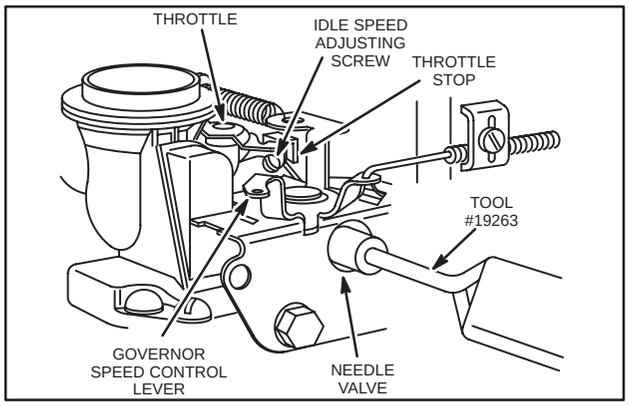

Fig. 255 – ADJUSTING CARBURETOR

WARNING: DO NOT remove spark plug and crank engine to clear flooded condition.

NOTE: Flooding can occur if engine is tipped at an angle for a prolonged period of time, if engine is cranked repeatedly when spark plug wire is disconnected, or if carburetor mixture is adjusted too rich.

In case of flooding, move governor control to "STOP" position and pull starter rope at least six times. (Crank electric starter models for at least 5 seconds.)

Then move control to "FAST" position and start engine. If engine continues to flood, lean carburetor needle valve – 1/8 to 1/4 turn clockwise or see Page 30, paragraph 2-A, B, and C.

When control is placed in "STOP" position governor spring holds throttle in a closed (idle) position. Cranking engine with a closed throttle creates a higher vacuum which opens choke rapidly, permitting engine to clear itself of excess fuel.

FLO-JET CARBURETORS

ONE-PIECE FLO-JET CARBURETORS

The small One-Piece Flo-Jet carburetor is illustrated in Fig's. 256 and 257 and was used on Model Series 60700, 61700, 80700, 81700, 140700, 141700, 144700 and 145700. These are float feed carburetors with high speed and idle needle valve adjustments.

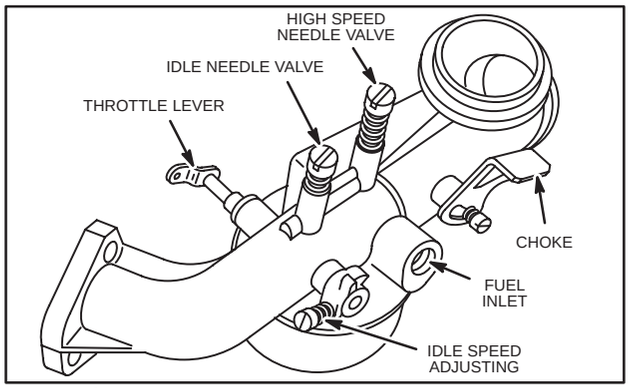

Fig. 256 – SMALL ONE-PIECE FLO-JET CARBURETOR

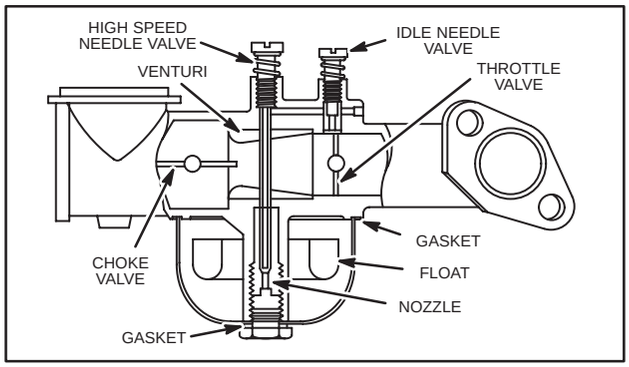

Fig. 257 – SMALL ONE-PIECE FLO-JET CARBURETOR

The large One-Piece Flo-Jet carburetor is similar to the small One-Piece Flo-Jet. The main difference is that the main jet needle valve is below fuel bowl, Fig's. 258 and 259.

AIR CLEANERS, CARBURETORS & GOVERNORS, (cont'd)

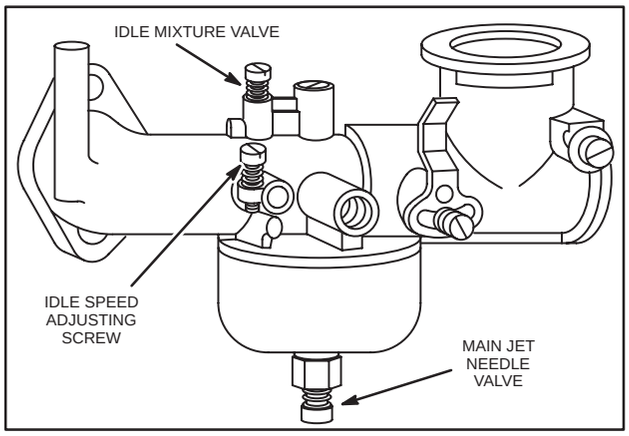

Fig. 258 – LARGE ONE-PIECE FLO-JET CARBURETOR

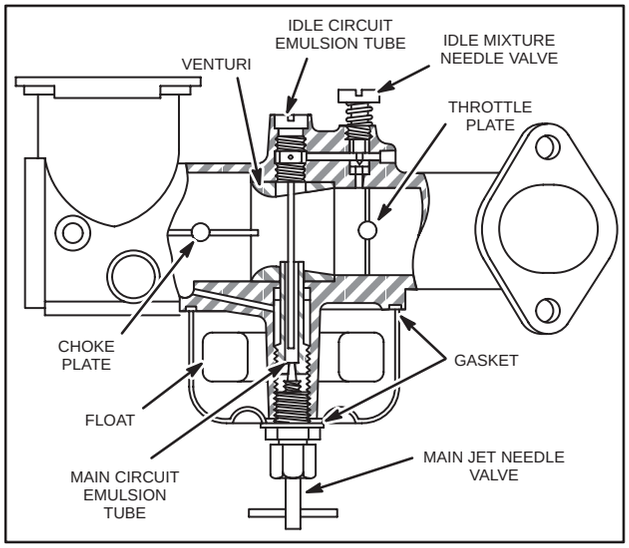

Fig. 259 – LARGE ONE-PIECE FLO-JET CARBURETOR

Repair procedures for small and large One-Piece Flo-Jet carburetors are similar except for location of adjusting needles.

To Disassemble Carburetor – Small One-Piece Flo-Jet

1. Remove idle and main jet needle valves, Fig. 257.
2. Remove bowl nut and fuel bowl.
3. Use Tool #19280, Carburetor Screwdriver, to remove emulsion tube, Fig. 260.
4. Remove float pin to remove float and inlet needle.
5. Use a large wide screwdriver to remove inlet valve seat.

To Disassemble Carburetor – Large One-Piece Flo-Jet

1. Remove idle circuit needle valve, Fig. 259.
2. Remove main jet needle valve assembly from float bowl and remove fuel bowl.
3. Use Tool #19280, Carburetor Screwdriver, to remove nozzle, then remove jet from top of carburetor.
4. Remove float pin to remove float and inlet needle.

To Disassembly – Small and Large One-Piece Flo-Jet

1. If necessary to remove choke shaft, venturi, or throttle shaft, proceed in following sequence.
2. Pry out welch plug.
3. Remove choke plate. On carburetors with nylon choke shaft, remove choke plate as shown in Fig. 261.
4. Venturi can now be removed, Fig. 260. (Large One-Piece CHOKE-A-MATIC® carburetors have a choke plate stop pin which must be pulled out to remove venturi.)
5. To check for throttle shaft wear, refer to two piece Flo-Jet for checking procedure, this Section, Page 45.
6. Remove throttle shaft seals, when so equipped.

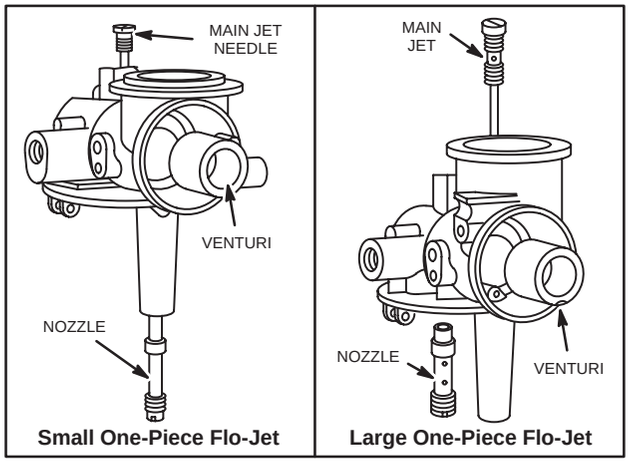

Fig. 260 – REPAIR CARBURETORS

AIR CLEANERS, CARBURETORS & GOVERNORS, (cont'd)

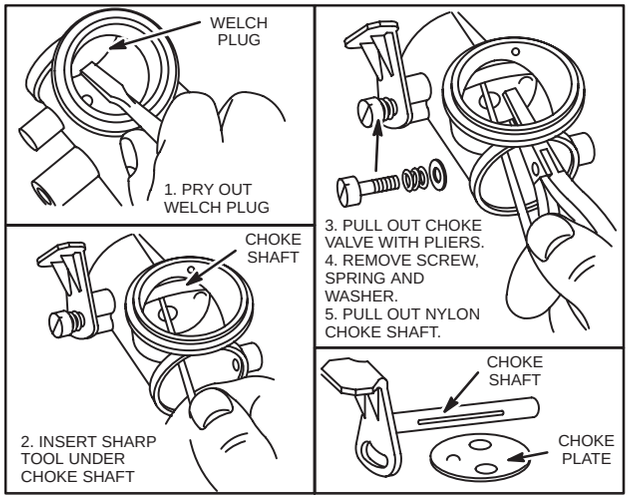

Fig. 261 – NYLON CHOKE SHAFT

Inspection

Reject idle and main jet needle valves if damaged, Fig. 262.

Check float for leakage. If it contains fuel or is crushed, it must be replaced. Replace float needle, if worn. If carburetor leaks with new float needle on carburetors with pressed in float needle seat, refer to next paragraph.

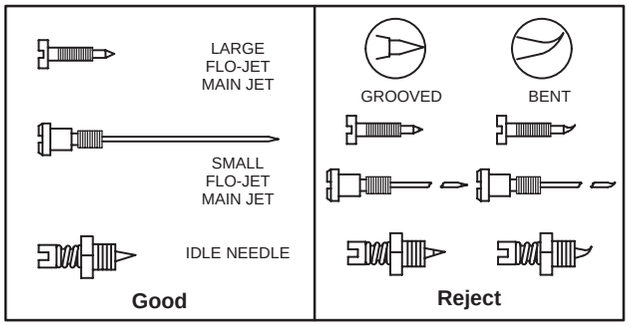

Fig. 262 – MIXTURE NEEDLES

To Replace Inlet Seat, Pressed In Type Large One-Piece Flo-Jet

1. Use a Part #93029 self-threading screw or remove one self-threading screw from Tool #19069, Flywheel Puller, and clamp head of screw in a vise.

NOTE: On carburetors with removable viton inlet seat, use a 1/4-20 tap and screw Part #93029 or a screw extractor to remove pressed in seat.

2. Turn carburetor body to thread screw or screw extractor into seat, Fig. 263.

3. Continue turning carburetor body drawing seat out.

4. Leave screw or screw extractor fastened to seat. Insert new seat from repair kit Part #394682 into carburetor body (seat has chamfer).

NOTE: If engine is equipped with a fuel pump, install repair kit Part #394683.

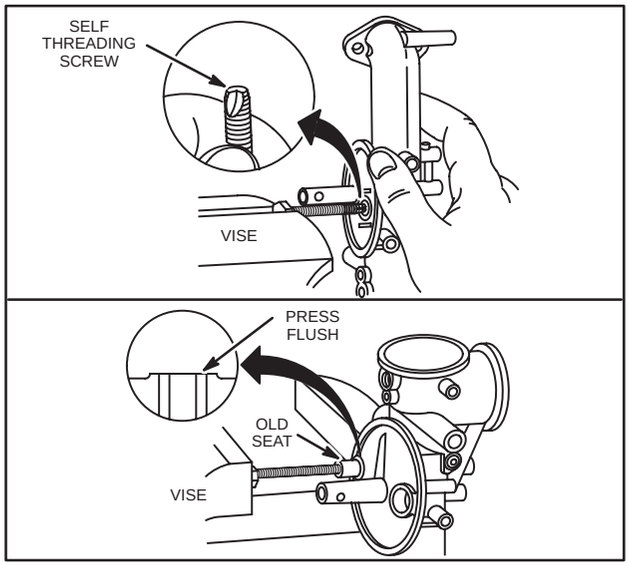

Fig. 263 – REPLACING FLOAT VALVE SEAT

5. Press new seat flush with body using screw/screw extractor and old seat as driver, Fig. 263.

6. Use care to ensure seat is not pressed below body surface or improper float to float valve contact will occur.

To Remove Inlet Seat Threaded Type Small One-Piece Flo-Jet

1. Remove float bowl nut and float bowl.

2. Remove float hinge pin and float assemble.

3. Remove inlet needle seat and gasket. Discard gasket.

To Inspect Carburetor

Inspect idle mixture needle for bent needle point or a groove in tip of needle. Replace if bent or grooved. Inspect float needle and seat for wear and damage. Replace any damaged parts.

To Assemble Carburetor

NOTE: On carburetors equipped with throttle shaft seals, rubber lipped seals are installed with lip out on both sides. Foam seals can be installed either way.

AIR CLEANERS, CARBURETORS & GOVERNORS, (cont'd)

1. Install inlet needle to float as shown, Fig. 264.
2. Open end of hook on spring must face away from venturi.

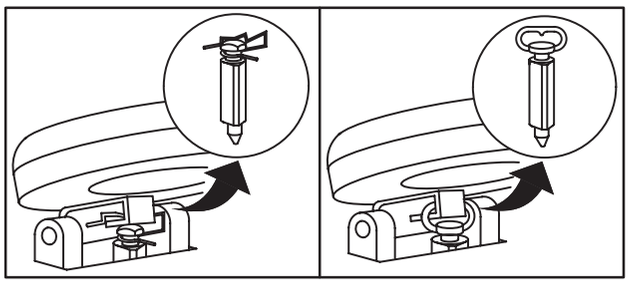

Fig. 264 – INLET NEEDLE VALVE VARIATIONS

To Install Float

1. Install inlet needle seat and new gasket. Do Not burr float needle seat slot or opening.
2. Install float and inlet needle assembly and center float hinge pin on two (2) on hinge pin bosses.

To Check Float Level

1. With body gasket in place on upper body and inlet needle and float installed, float should be parallel to body mounting surface, Fig. 265.
2. If not, bend tang on float until surfaces are parallel. DO NOT PRESS ON FLOAT, Fig. 265.

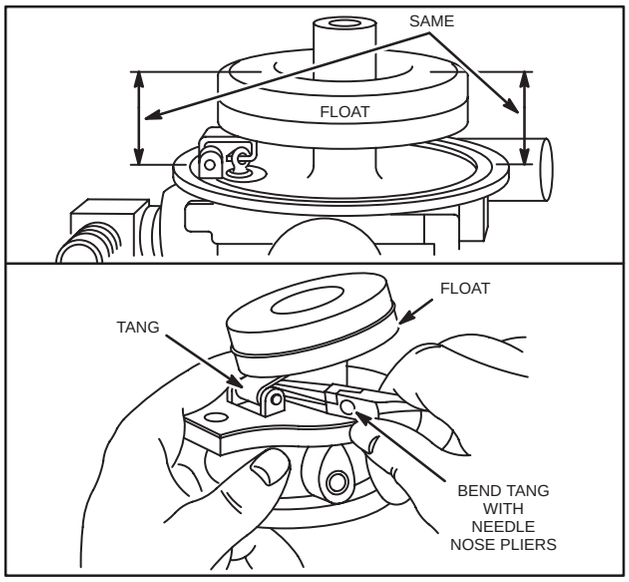

Fig. 265 – CHECKING FLOAT LEVEL

3. Install new float bowl gasket and float bowl. Tighten float bowl nut and washer.

To Repair Carburetor

Use new parts where necessary. Always use new gaskets. Carburetor repair kits are available. See Illustrated Parts List for particular model.

1. If throttle shaft and/or venturi have been removed, install throttle and throttle shaft first.
2. Install venturi.
3. Install jet on small One-Piece or nozzle on large One-Piece Flo-Jet. The nozzle or jet holds venturi in place, Fig. 260.
4. Replace choke shaft and plate.
5. Install new welch plug using sealer around edge of plug.
6. Stake plug in eight places. Sealer is to prevent entry of dirt into engine.
7. Install idle and main circuit adjustment needle valves.

To Adjust Carburetor – Initial Adjustment

1. Turn both idle and main jet needle valves clockwise until they just just contact seat.
2. Turn both needle valves 1-1/2 turns counterclockwise.

These settings will allow engine to start. Final adjustment should be made when engine is running and has warmed up. See carburetor adjustment (Two Piece Flo-Jet carburetor), Page 49, this Section.

TWO-PIECE FLO-JET CARBURETORS, SMALL, MEDIUM AND LARGE

Fig's 266, 267, and 268 illustrate the three different sizes of Two-Piece Flo-Jet carburetors used on Briggs & Stratton engines.

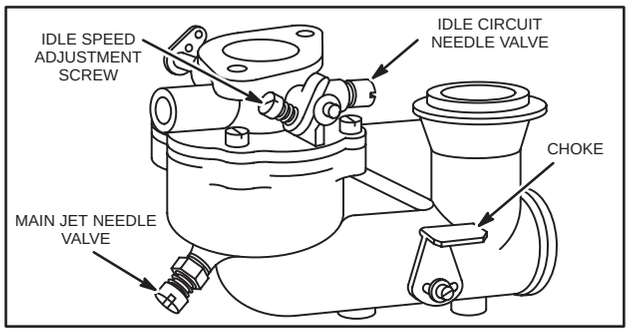

Fig. 266 – SMALL FLO-JET, HORIZONTAL AND VERTICAL CRANKSHAFT

AIR CLEANERS, CARBURETORS & GOVERNORS, (cont'd)

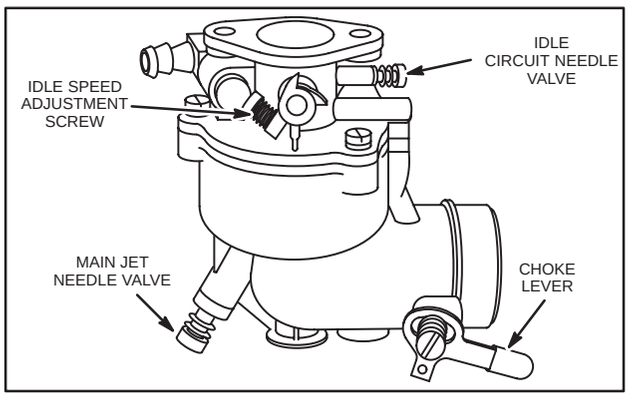

Fig. 267 – MEDIUM FLO-JET, HORIZONTAL CRANKSHAFT

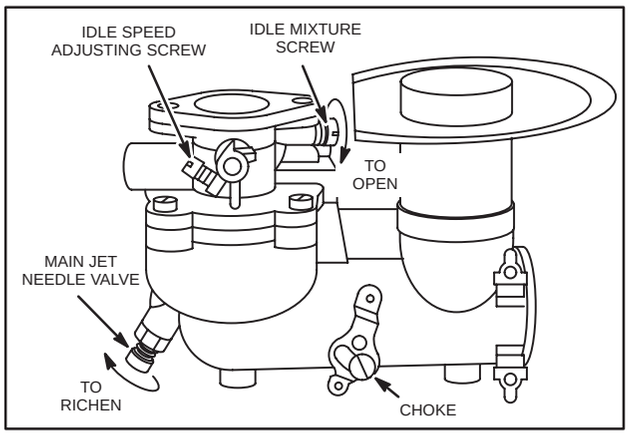

Fig. 268 – LARGE FLO-JET, HORIZONTAL CRANKSHAFT

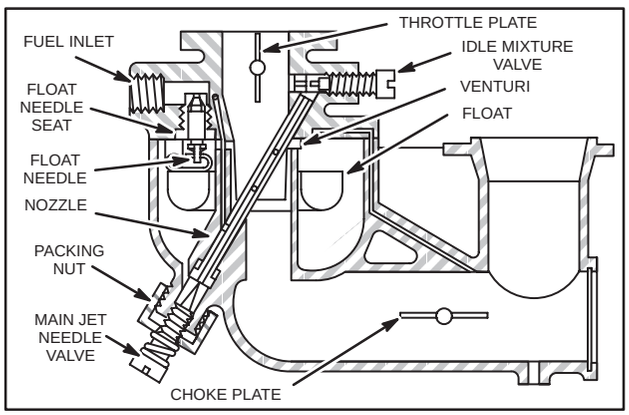

Fig. 269 – TYPICAL TWO PIECE FLO-JET CARBURETOR

To Remove Carburetor

Close shut-off valve in fuel filter or tank (when used). Disconnect fuel line at carburetor. Remove air cleaner and elbow. Hold carburetor to prevent dropping and remove two (2) cap screws and lockwashers from the intake elbow. Remove throttle link and governor spring. The carburetor is then free from all connections.

To Check Upper Carburetor Body for Warpage

With carburetor assembled and body gasket in place, if a .002" (.05 mm) feeler gauge can be inserted between upper and lower bodies at fuel bowl vent boss, just below idle mixture needle valve, upper body is warped or gasket surfaces are damaged and should be replaced, Fig. 270.

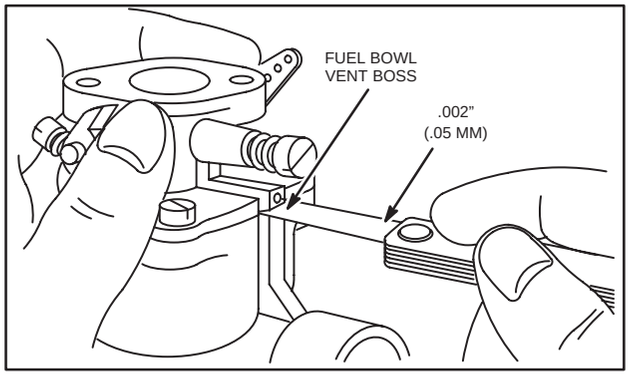

Fig. 270 – CHECKING CARBURETOR BODY

To Check Throttle Shaft and Bushings for Wear

Wear between throttle shaft and bushings should not exceed .010" (.25 mm).

1. Check wear by placing a short iron bar on upper carburetor body as shown in Fig. 271.
2. Measure distance between bar and shaft with feeler gauge while holding shaft down and then holding shaft up.
3. If difference is over .010" (.25 mm), either upper body should be rebushed, throttle shaft replaced, or both.
4. Wear on throttle shaft can be checked by comparing worn and unworn portions of shaft.
5. To replace bushings, see "To Remove Throttle Shaft and Bushings," Page 47, this section.

AIR CLEANERS, CARBURETORS & GOVERNORS, (cont'd)

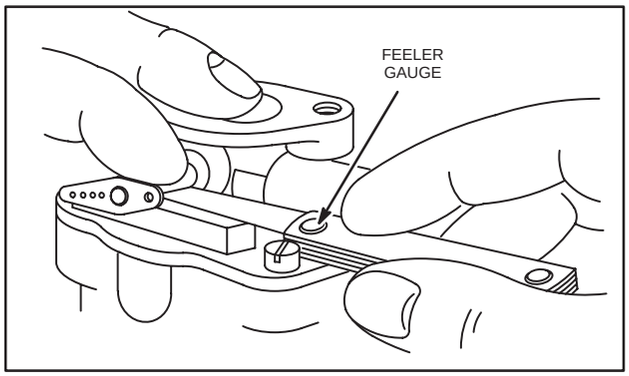

Fig. 271 – CHECKING THROTTLE WEAR

To Disassemble Carburetor

1. Remove idle circuit needle valve.

2. On early small Flo-Jet loosen main jet needle valve packing nut. Remove packing nut and main jet needle valve together. On current small, medium and large Flo-Jets remove main jet needle valve assembly.

3. Remove nozzle with Tool #19280, Carburetor Screwdriver, Fig. 272. Use of Tool #19280 will help to prevent damage to threads in lower carburetor body.

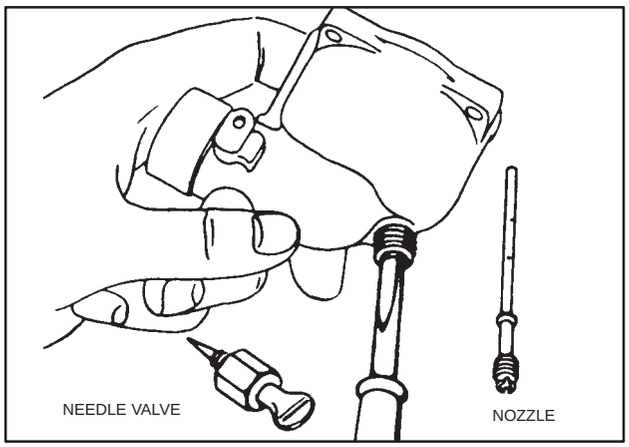

Fig. 272 – REMOVING NOZZLE

NOTE: If threads have been damaged in lower carburetor body Tool #19245, Tap Set, can be used to clean damaged threads.

4. Because nozzle projects diagonally into a recess in upper body, it must be removed before separating upper and lower bodies, Fig. 269.

5. Remove screws holding upper and lower bodies together and separate the two bodies.

6. Remove float pin and remove float and inlet needle as an assembly.

7. With wide heavy screw driver remove the seat, Fig. 273. Pull venturi out of lower body.

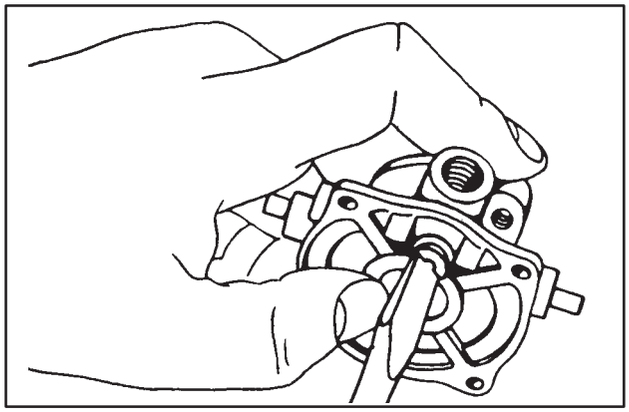

Fig. 273 – REMOVING INLET VALVE SEAT

8. On carburetors with pressed in seats, see "To Replacing Pressed in Float Seats," Page 47, this Section.

On small Flo-Jet carburetors, venturi is a separate part and can be slipped out of lower body.

Some two piece Flo-Jet carburetors have a welch plug and it should be removed only if choke shaft or choke plate is going to be removed. Some carburetors have a nylon choke shaft. Remove as shown, Fig. 274.

AIR CLEANERS, CARBURETORS & GOVERNORS, (cont'd)

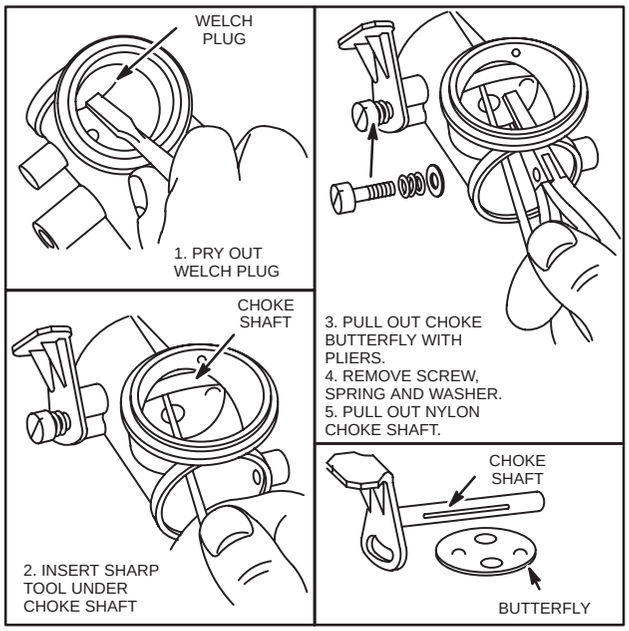

Fig. 274 – NYLON CHOKE SHAFT

To Remove Throttle Shaft, Plate And Bushing

Throttle shaft should be removed only when necessary to replace throttle shaft and/or bushings.

1. To remove throttle shaft, use a thin punch to drive out pin holding throttle stop to shaft, remove throttle plate, then pull out shaft, Fig. 275.

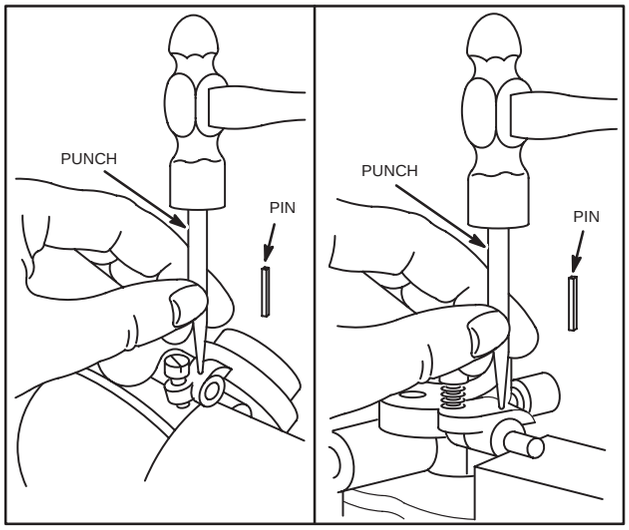

Fig. 275 – REMOVE THROTTLE SHAFT AND BUSHINGS

To Replace Throttle Shaft Bushings

1. Place a 1/4" x 20 tap or an E-Z out in a vise.
2. Turn carburetor body so as to thread tap or E-Z out into bushings enough to pull bushings out of body, Fig. 276.
3. Press new bushings into carburetor body with a vise.
4. Insert throttle shaft to be sure it is free in bushings.
5. If not, run a size 7/32" drill through both bushings to act as a line reamer.
6. Install throttle shaft, valve and stop.

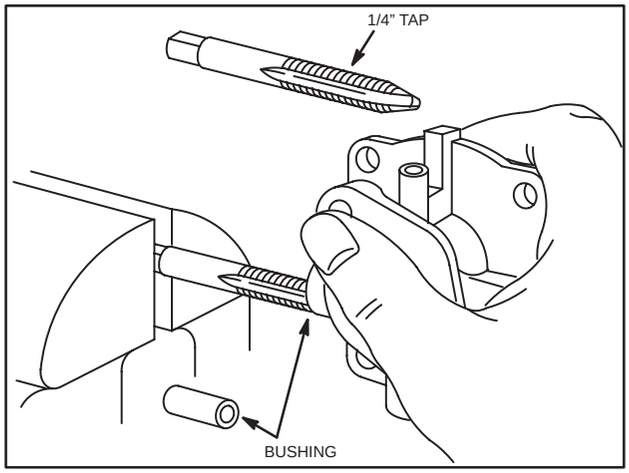

Fig. 276 – REPLACING THROTTLE SHAFT BUSHINGS

To Repair Carburetor

1. Replace Inlet Needle Seat.

Use new parts when necessary. Always use new gaskets. Old gaskets take a set or harden and may leak. Carburetor repair kits are available. See Illustrated Parts List for part number for specific model.

2. Tighten inlet seat with gasket securely in place, if used. Some inlet needles have a spring clip to connect float valve to float tang. Others are nylon with a stirrup which fits over float tang. Older type inlet needles and earlier engines with fuel pumps have neither spring or stirrup.
3. A viton tip inlet needle is used on later models of Flo-Jet carburetors. These needles are used with inlet needle seat pressed into upper carburetor body and does not normally need replacement unless damaged.
4. Use a Part #93029 self-threading screw or remove one self-threading screw from Tool #19069, Flywheel Puller, and clamp head of screw in a vise.

NOTE: On carburetors with removable viton inlet seat, use a 1/4-20 tap and screw Part #93029 or a screw extractor to remove pressed in seat.

5. Turn carburetor body to thread screw or screw extractor into seat, Fig. 263.

AIR CLEANERS, CARBURETORS & GOVERNORS, (cont'd)

6. Continue turning carburetor body drawing seat out.

7. Leave screw or screw extractor fastened to seat. Insert new seat from repair kit Part #394682 into carburetor body (seat has chamfer).

NOTE: If engine is equipped with a fuel pump, install repair kit Part #394683, Fig. 277.

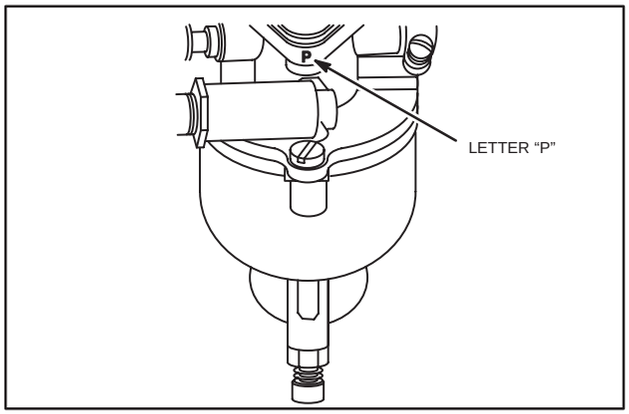

Fig. 277 – FLANGE MARKING, FUEL PUMP

8. Press new seat flush with body using screw and old seat as a driver, Fig. 263.

9. Use care to ensure seat is not pressed below body surface or improper float to inlet needle contact will occur.

To Check Float Level

1. With body gasket in place on upper body and inlet needle and float installed, float should be parallel to body mounting surface.

2. If not, bend tang on float until they are parallel. DO NOT PRESS ON FLOAT TO ADJUST, Fig's. 278 or 279 A/B.

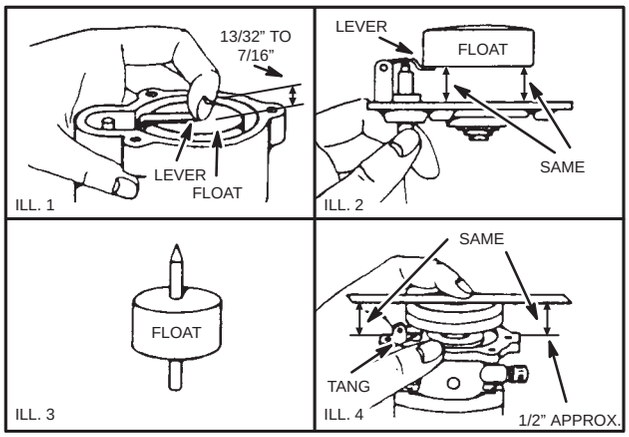

Fig. 278 – CHECKING FLOAT POSITION (EARLY)

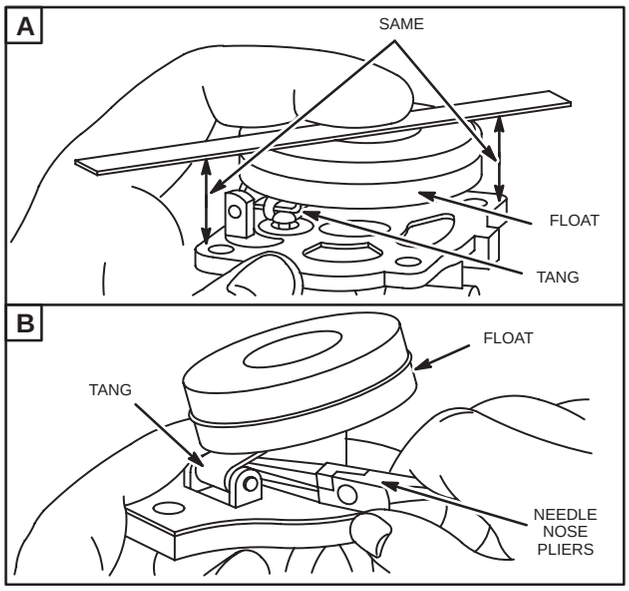

Fig. 279 A/B – CHECKING FLOAT LEVEL (LATER)

To Assemble Carburetor

1. Assemble venturi and venturi gasket, when used, to lower body. Be sure holes in venturi and venturi gasket are aligned. Most models do not have a removable venturi.

2. Install choke parts and welch plug if previously removed.

3. Use a sealer around welch plug to prevent entry of dirt.

4. Stake welch plug at least twice on small two-piece Flo-Jets and eight places on large two-piece Flo-Jets.

5. Fasten upper and lower bodies together with mounting screws.

6. Screw in nozzle with Tool #19280, Carburetor Screwdriver, being careful that nozzle tip enters recess in upper body, Fig. 280. Tighten nozzle securely.

7. Screw in needle valve and idle valve until they just seat.

8. Turn main jet needle valve clockwise 1-1/2 turns. Do not tighten packing nut.

9. Turn idle mixture needle valve clockwise 1-1/4 turn. These settings are approximately correct. Final adjustment will be made when engine is running.

WARNING: All carburetor adjustments must be made with air cleaner installed.

AIR CLEANERS, CARBURETORS & GOVERNORS, (cont'd)

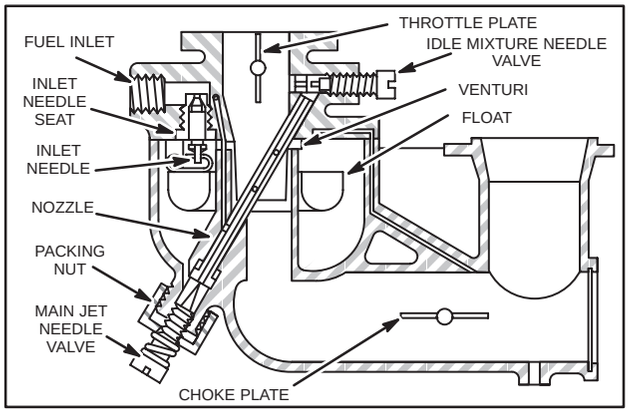

Fig. 280 – ASSEMBLE CARBURETOR

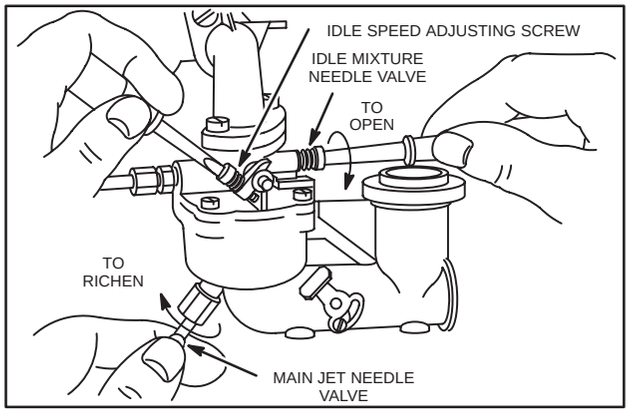

Fig. 281 – ADJUSTING CARBURETOR

To Adjust Carburetor, (All One and Two-Piece Flo-Jets except Cross-Over)

1. Start engine and run 5 minutes to attain operating temperature.
2. Place governor speed control lever in "FAST" position.
3. Turn main jet needle valve in until engine slows (clockwise-lean mixture).
4. Then turn it out past smooth operating point (rich mixture).
5. Turn main jet needle valve to midpoint between rich and lean. After adjusting, tighten packing nut.
6. Rotate throttle counterclockwise and hold against stop.
7. Adjust idle speed adjusting screw to obtain 1750 RPM, aluminum engines; 1200 RPM, cast iron engines, Fig. 281.
8. Holding throttle against idle stop, turn idle mixture needle clockwise (lean) and counterclockwise (rich).
9. Set at midpoint between rich and lean.
10. Recheck idle RPM. Release throttle.
11. If engine will not accelerate properly, carburetor should be readjusted, usually to a slightly richer mixture.

CHOKE-A-MATIC® Remote Control Adjustment

On CHOKE-A-MATIC® carburetors, remote control must be correctly adjusted in order to obtain proper operation of choke and stop switch. See Section 4 for illustration by engine model.

Idling Device and Throttle Control (Two-Piece Flo-Jet)

A manual friction control may be used to limit throttle movement, to any pre-set position. It is commonly used for two purposes:

1. To return throttle to a "no-load" position on a pump, generator, etc.
2. For cold weather starting on governed idle engines. Throttle can easily be kept in a "near closed" position, while starting, which is most favorable for cold weather starts, Fig. 282.

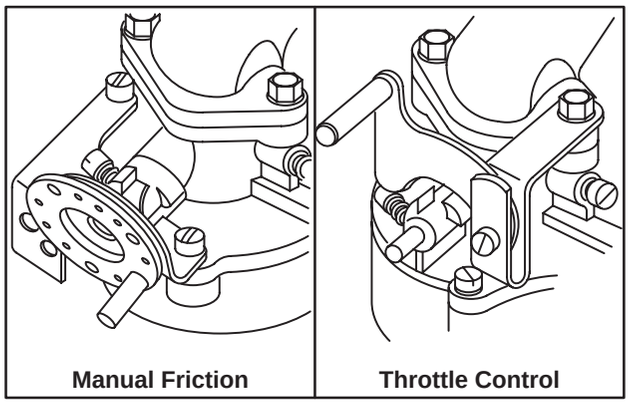

Fig. 282 – IDLING DEVICE AND THROTTLE CONTROL

AIR CLEANERS, CARBURETORS & GOVERNORS, (cont'd)

Remote Throttle Control Two Piece Flo-Jet

The remote throttle control opens carburetor throttle until full governed speed is obtained, at which point governor takes over control of throttle. At any point below governed speed, throttle is held in fixed position and engine speed will vary with load, Fig. 283.

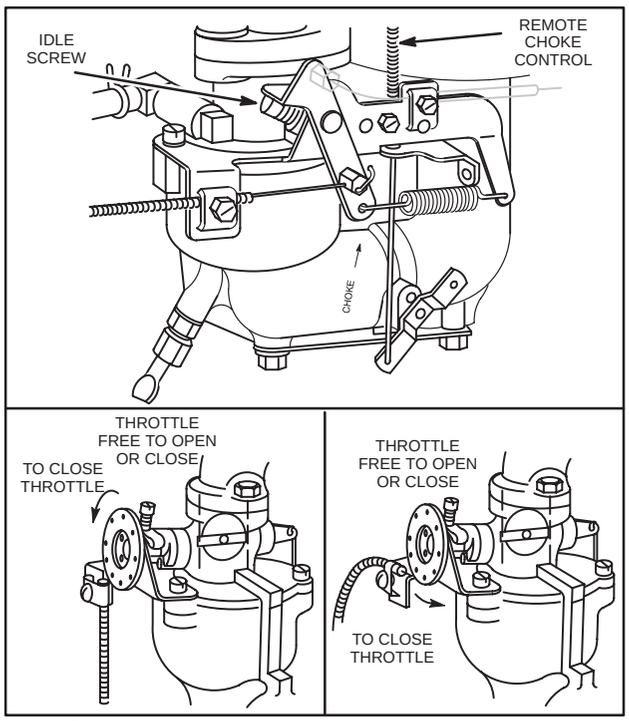

Fig. 283 – REMOTE THROTTLE CONTROL

CROSS-OVER FLO-JET CARBURETORS, HORIZONTAL CRANKSHAFT ENGINES

The Cross-over Flo-Jet carburetor is used on Model Series 253400 engines and is a float type carburetor with idle circuit and main jet adjustment needles. This carburetor also has an integral fuel pump. All adjustments can be made from top of carburetor, Fig's. 284 and 285.

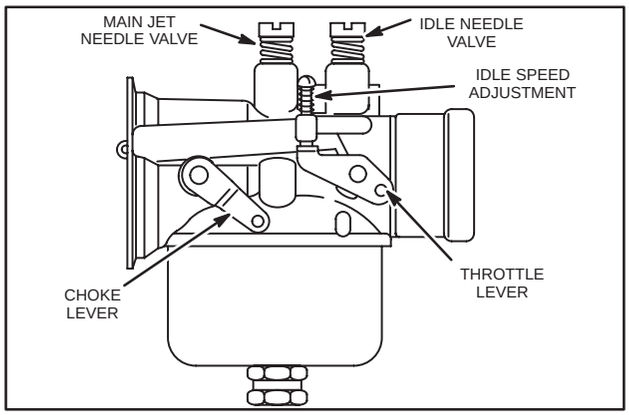

Fig. 284 – CROSS-OVER FLO-JET

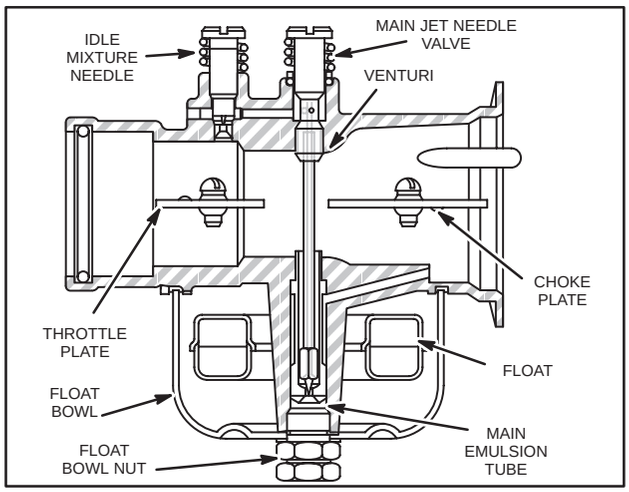

Fig. 285 – SECTIONAL VIEW

To Disassemble Cross-Over Flo-Jet

1. Remove idle and main jet adjustment needle valves.
2. Remove float bowl mounting screw, washer and float bowl.
3. Using a large blunt screwdriver, remove nozzle.
4. Remove float hinge pin, float and inlet needle.
5. Use screwdriver to remove two screws from choke shaft.
6. Remove choke plate and choke shaft.
7. Use screwdriver to remove screw from throttle shaft.
8. Remove throttle plate and throttle shaft.
9. Use screwdriver to remove three screws from fuel pump body.
10. Remove fuel pump from carburetor taking care not to lose pump flapper valve springs.

AIR CLEANERS, CARBURETORS & GOVERNORS, (cont'd)

To Inspect Carburetor

Check idle and main jet needle valves for burrs, grooves or bent needle tips. Replace if damaged, Fig. 286. Check float for fuel in float, damage or leaks. If it contains fuel or is crushed, it must be replaced. If carburetor leaks with new inlet needle valve, replace inlet needle seat. See next paragraph. Check pump body for cracks or distortion of body. Replace if damaged.

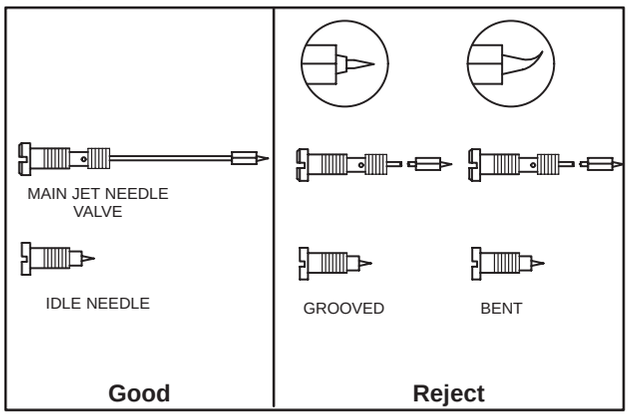

Fig. 286 – CHECKING NEEDLE VALVES

To Replace Pressed-In Inlet Needle Seat

1. Use a #93029 self-threading screw or remove one self-threading screw from Tool #19069, Flywheel Puller, and clamp head of screw in a vise.
2. Turn carburetor body to thread screw into inlet seat, Fig. 287.
3. Continue turning carburetor body drawing inlet seat out. Leave seat fastened to screw.
4. Insert new inlet seat from repair kit Part #394683 into carburetor body (seat has starting chamfer).

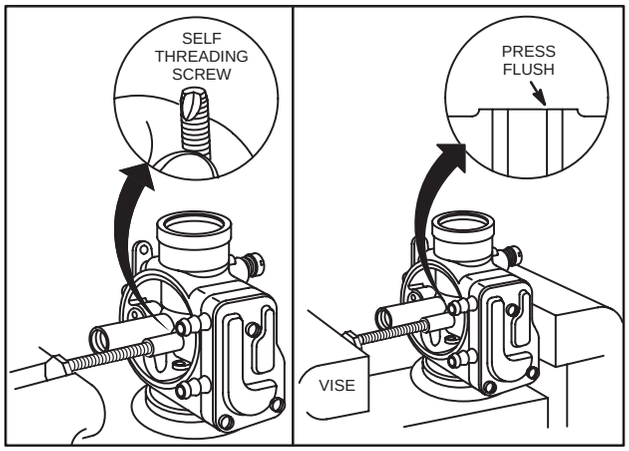

Fig. 287 – REPLACING FLOAT VALVE SEAT

5. Press new inlet seat flush with body using screw and old seat as a driver, Fig. 287. Use care to ensure seat is not pressed below body surface or improper float to float needle valve contact will occur.
6. Install inlet needle as shown in Fig. 288. Hook on spring must face away from venturi.

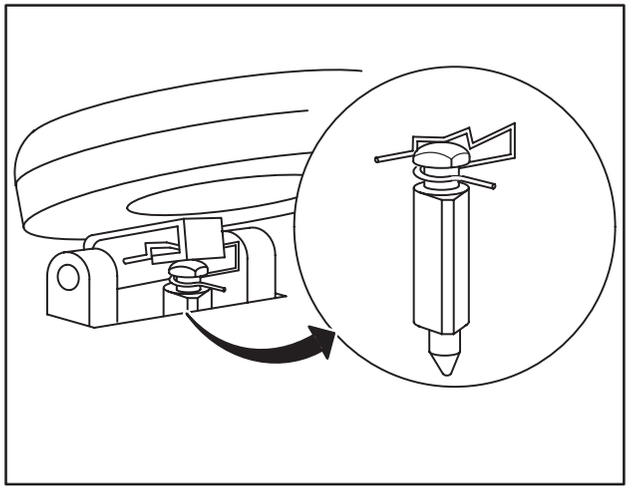

Fig. 288 – INSTALLING FLOAT AND INLET NEEDLE

To Check Float Level

1. With inlet needle, float and float hinge pin installed, hold carburetor upside down.
2. Float should be parallel to bowl mounting surface.
3. If not, bend tang on float until they are parallel. DO NOT PRESS ON FLOAT TO ADJUST, Fig. 289.

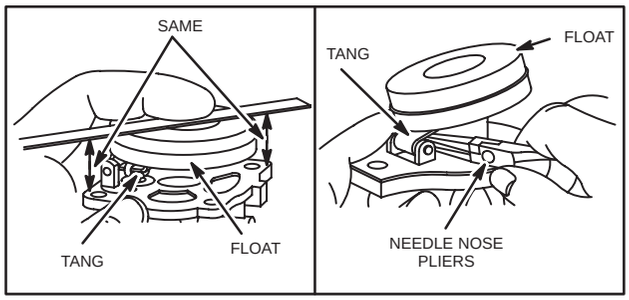

Fig. 289 – CHECKING FLOAT LEVEL

To Repair Carburetor

Use new parts where necessary. Always use new gaskets. Old gaskets take a set or harden and may leak. Carburetor repair kits are available. See Illustrated Parts List for part numbers. These carburetors use a viton tip inlet needle and a pressed-in inlet seat. Seat does not normally need replacement unless it is damaged or leaks with a new inlet needle.

AIR CLEANERS, CARBURETORS & GOVERNORS, (cont'd)

To Assemble Carburetor

1. Install main emulsion tube using blunt screwdriver to prevent damage to slot and metering hole.

2. Place bowl on carburetor and install bowl nut and washer.

3. Install one (1) flapper valve spring on spring boss, Fig. 290, and then place diaphragm on carburetor.

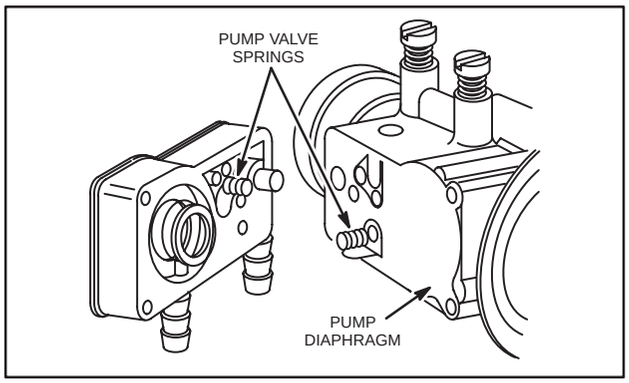

Fig. 290 – PUMP SPRING LOCATION (VALVE FLAP BENT DOWN FOR CLARITY)

4. Place a pump valve spring on spring boss in pump body, Fig. 290, and place pump body on carburetor.

5. Place damping diaphragm, pump gasket and pump cover on pump body and install three screws, Fig. 291. A fuel pump repair kit is available. See Illustrated Parts List for part number.

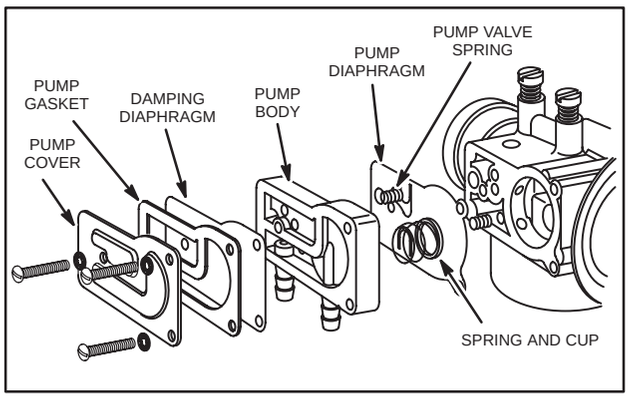

Fig. 291 – ASSEMBLE FUEL PUMP

6. Place choke shaft in carburetor body and slide in choke plate with notch out and dimple down toward float bowl, Fig. 292A.

7. Install two (2) screws using a screwdriver.

8. Slide in throttle shaft and then slide in throttle plate with two (2) dimples facing toward idle valve.

9. When valve is installed correctly, dimples will be down and number on plate is visible with throttle in closed or idle position, Fig. 292B.

10. Install idle and main jet needle valves.

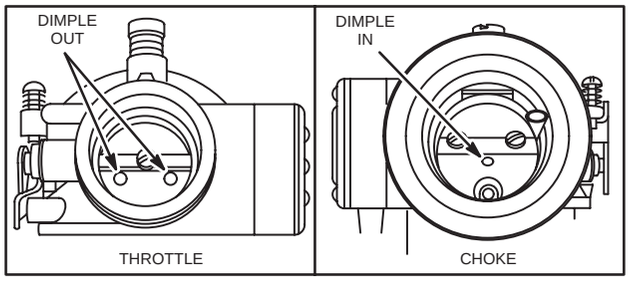

Fig. 292A *Fig. 292B*

To Adjust Carburetor

Initial Adjustment

1. Turn idle and main jet mixture needle clockwise until lightly contacting the seat. Fig. 293.

NOTE: Needle valves may be damaged by turning them too far.

2. Turn main jet needle valve counterclockwise 1-1/2 turns and idle circuit needle valve counterclockwise one turn.

3. Install air cleaner assembly.

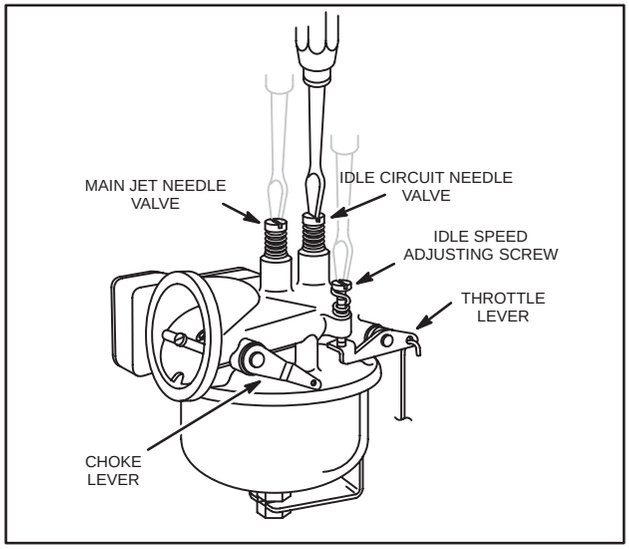

Fig. 293 – CARBURETOR ADJUSTMENT

WARNING: Carburetor adjustments should be made with air cleaner installed on engine.

AIR CLEANERS, CARBURETORS & GOVERNORS, (cont'd)

Final Adjustment

Idle Needle Valve Mixture

1. Place governor speed control lever in "IDLE" position.
2. Set idle speed adjusting screw to obtain 1750 RPM minimum while holding throttle lever against screw.
3. Turn idle circuit needle valve in until RPM slows or misses (clockwise – lean mixture), then turn it out past smooth idling point until engine runs unevenly (rich mixture).
4. Now turn idle circuit needle valve to midpoint between rich and lean so engine runs smoothly.
5. Release throttle lever.
6. Readjust idle speed to 1750 RPM, if required.

Main Jet Needle Valve Mixture

Move governor speed control lever to "FAST" position.

1. Turn main jet needle valve clockwise until engine slows or misses (lean mixture), then turn counter clockwise out past smooth operating point until engine runs unevenly (rich mixture).
2. Turn main jet needle valve to midpoint between rich and lean so engine runs smoothly, Fig. 293.
3. Engine should accelerate smoothly.
4. If engine does not accelerate properly, carburetor should be readjusted usually to a slightly richer mixture.

KEROSENE SYSTEM OPERATION

Power loss will vary between 15% to 25% and fuel consumption will be approximately 15% less while running on kerosene.

Fig's. 294 through 299 illustrates various types of Briggs & Stratton combination fuel systems used.

Due to the low volatility of kerosene, engines operated on kerosene-gasoline fuel systems can be started on kerosene, only when engine is at operating temperature. Cold engines must be started on gasoline and switched over to kerosene operation only after warmed up.

After warm-up and while operating on kerosene, adjust carburetor needle valves to a point where engine runs smoothest, and accelerates without hesitation when throttle is quickly opened. When shutting down engine, the carburetor must be emptied of kerosene so the engine can be started on gasoline when cold. Refer to Flo-Jet carburetor for adjustment of carburetor and adjust carburetor while running on kerosene.

To operate units equipped as shown in Fig's. 294 through 296, close fuel filter valve and open bleed screw in needle valve to drain the carburetor. Close bleed screw. Remove wing plug to fill fuel line and carburetor with gasoline. Combination fuel tank units, Fig. 294, open gasoline shut-off valve "A," and close kerosene shut-off valve "B" two or three minutes before shutting off engine. This will stop the flow of kerosene to the carburetor, and will admit gasoline to the carburetor.

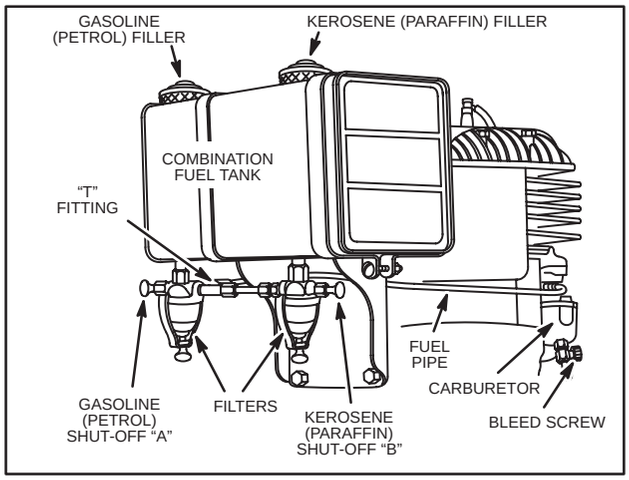

Fig. 294 – COMBINATION FUEL TANK

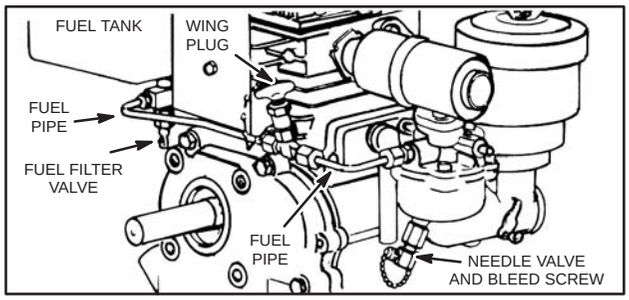

Fig. 295 – KEROSENE FUEL SYSTEM

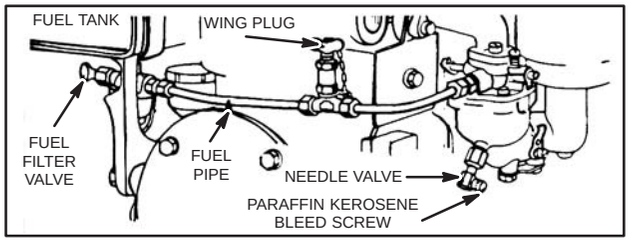

Fig. 296 – KEROSENE FUEL SYSTEM

AIR CLEANERS, CARBURETORS & GOVERNORS, (cont'd)

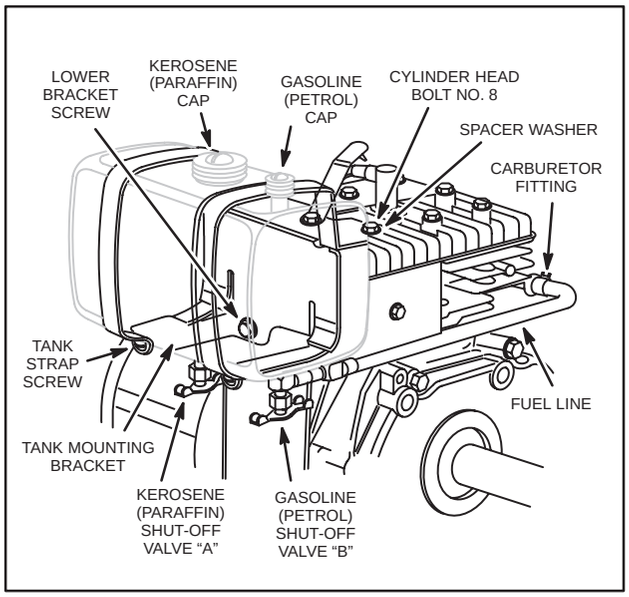

Fig. 297 – COMBINATION FUEL TANK

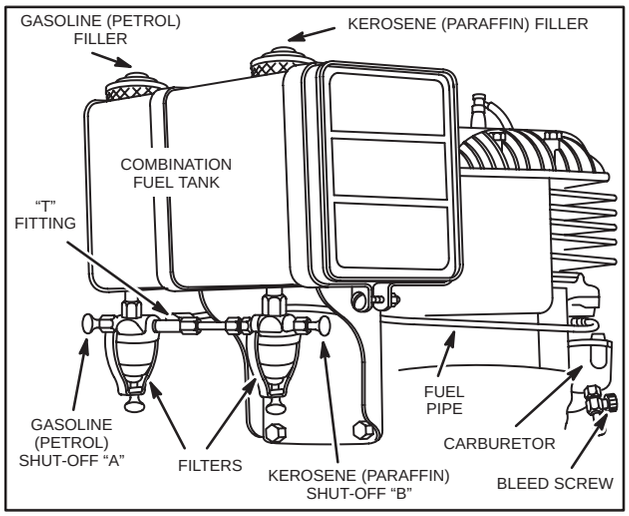

Fig. 298 – COMBINATION FUEL TANK

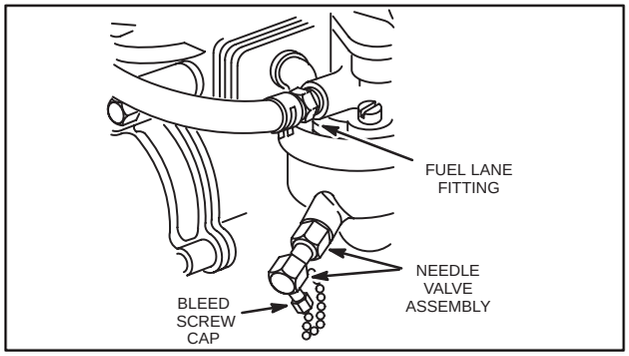

Fig. 299 – COMBINATION FUEL CARBURETOR

Efficient engine performance will be obtained only when following changes are accomplished:

1. A low compression cylinder head is required for models 131400, 132400, 233000, and 243000. Other models may use two cylinder head gaskets.
2. A special spark plug – #291835 – must be used on models 233000, and 243000. Spark plug gap .030" (.76 mm) all models.
3. A reduced breaker gap, .015" (.38 mm), is used on models 233000 and 243000. Engine must be retimed using reduced breaker gap. Follow timing procedure in Section 2, Ignition.

To Adjust Carburetor for Kerosene Operation

1. After warm-up and while operating on kerosene, adjust carburetor needle valves to a point where engine runs smoothest, and accelerates without hesitation when throttle is quickly opened.
2. When shutting down engine, carburetor must be emptied of kerosene so engine can be started on gasoline when cold.
3. Refer to Flo-Jet carburetor for adjustment of carburetor and adjust carburetor while running on kerosene.

LP GAS FUEL SYSTEM

The following information is provided to assist you in servicing LP gas fuel systems. This information applies only to Garretson Equipment Company systems installed by Briggs & Stratton. For parts information refer to MS-3915. Parts for Garretson system must be obtained from a Garretson parts distributor.

For additional information about LP conversion kits, contact:

Carburetion & Turbo Systems
1897 Eagle Creek Blvd.
Shakopee, MN 55379
Phone 612-445-3910

or

Carburetion Equipment Co.
P.O. Box 29959
Dallas, TX 75229
Phone 214-243-7668

For LP fuel systems not covered in this section contact manufacturer of fuel system.

WARNING: LP gas fuel system should only be worked on in a very well ventilated area. Many state, county and city governments require that service be performed only outdoors. Before loosening any fuel line connections, have a fan blowing directly across engine.

AIR CLEANERS, CARBURETORS & GOVERNORS, (cont'd)

To Check and Adjust Fuel System

1. Loosen fuel line at primary regulator.
2. Open valve on cylinder for an instant, to be sure there is pressure in fuel cylinder.
3. Escaping gas can be heard.
4. Shut off valve at cylinder, Fig. 300.
5. Remove fuel line between primary and secondary regulator (fuel controller).
6. Attach pressure gauge to outlet of primary regulator, leaving gauge connection loose enough to permit a slight leakage of gas. (This will permit adjustment of regulator under conditions of actual gas flow.)
7. Remove cap or top of primary regulator, Fig. 300.
8. Open fuel cylinder valve.
9. Turn pressure regulating screw in primary regulator, until a pressure of 1–1/2 P.S.I. (.1 bar) is obtained at pressure gauge.
10. Shut off fuel cylinder valve.
11. Reassemble cap.
12. Remove pressure gauge.
13. Loosen secondary regulator bracket from carburetor.
14. Pull secondary regulator away from carburetor so that short rubber fuel line is disconnected.
15. Assemble fuel line between primary regulator and secondary regulator (fuel controller).
16. Secondary regulator must remain mounted so diaphragm is in a vertical plane, Fig. 300.
17. Open fuel cylinder valve.
18. Apply soap suds to outlet at center of secondary regulator to which rubber fuel line has been attached.
19. If a bubble forms, it indicates that valve is leaking or not locking off.
20. If no bubble appears, press primer button.
21. A bubble should appear, indicating fuel is flowing into regulator.
22. Put soap suds on outlet again, then slowly turn adjusting screw at bottom of secondary regulator counterclockwise until a bubble forms at outlet.
23. Turn adjusting screw in (clockwise) slowly until soap bubbles on outlet no longer form.
24. Hold adjusting screw at this point and tighten locknut.
25. Press primer button to allow fuel to flow.
26. Release and again put soap suds on outlet to make certain fuel shuts off.
27. Repeat several times.
28. If bubble should form after primer button is released, adjusting screw should be turned in until flow stops and soap bubble does not break or enlarge.
29. Loosen fuel line between regulators.
30. Re-assemble secondary regulator to carburetor with short rubber fuel line in place.
31. Retighten fuel line connections, Fig. 300.

To Adjust Carburetor, LP Fuel System

1. Loosen locknut on load needle screw and turn needle screw in until it seats.
2. Do not force; open 2-1/2 turns.
3. Turn idle circuit needle in until it seats, then open one turn.
4. If engine will not be required to idle, leave idle circuit needle closed.
5. Depress primer button momentarily, then start engine, run engine to allow it to warm up before final adjustment.
6. With engine running at normal operating speed, turn load needle screw in slowly (clockwise) until engine starts to miss (lean mixture).

WARNING: Air cleaner element must be in place when running engine.

7. Then turn load screw out slowly past point of best operation until engine begins to run unevenly (rich mixture).
8. Then turn load screw in just enough so engine will run smoothly.
9. Hold load screw and tighten locknut.
10. Hold throttle at idle position, then release throttle.
11. Engine should accelerate quickly and smoothly.
12. If engine will be required to run at idle, turn idle speed adjusting screw on throttle until engine runs at proper idle speed for engine model. See Repair Check Chart.
13. Hold throttle at this point and turn idle circuit needle slowly in or out until engine runs at maximum idle speed.
14. Then readjust idle speed screw until proper idle speed is obtained.

AIR CLEANERS, CARBURETORS & GOVERNORS, (cont'd)

15. Allow throttle to open. Engine should accelerate quickly and smoothly.

16. If not, readjust load screw, usually to a richer mixture.

17. To stop engine, turn off fuel supply valve at fuel cylinder.

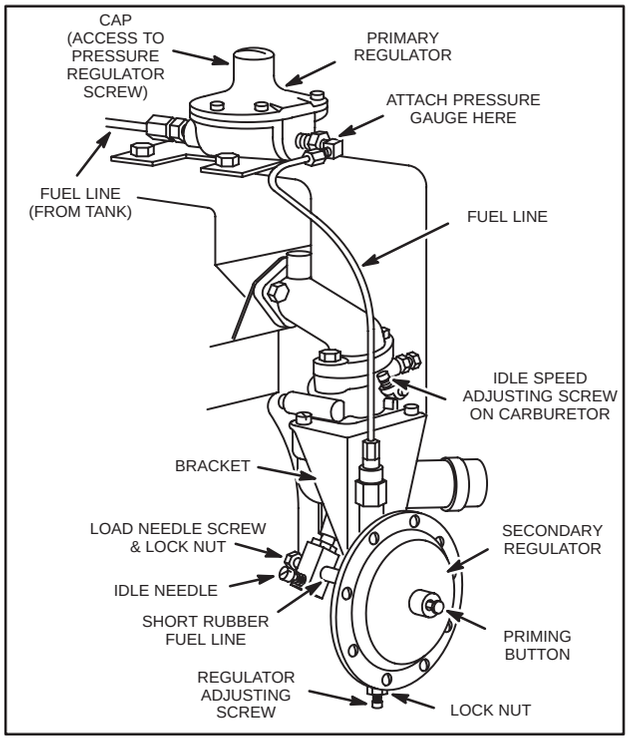

Fig. 300 – ADJUSTING CARBURETOR, LP FUEL SYSTEM

To Start Engine

1. To start engine, do not use choke, but depress primer button momentarily, then start engine immediately.

2. In cold weather, it may be necessary to partially close carburetor choke plate to permit engine to run smoothly until engine warms up.

To Clean LP Gas Filter (Optional)

1. Shut off gas. Unscrew filter head from filter body. Remove element assembly from head, Fig. 301.

2. Wash element in commercial solvent cleaner or gasoline.

3. If accumulated dirt is gummy, we suggest a short soaking period in solvent cleaner.

4. Element should then be rinsed in clean solvent and blown with compressed air.

WARNING: Wear eye protection when using compressed air.

NOTE: ALWAYS USE REVERSE FLOW FROM INSIDE OUT. NEVER USE COMPRESSED AIR ON OUTSIDE SURFACE OF ELEMENT. NEVER DIP ELEMENT IN "BRIGHT DIP" OR OTHER ACID SOLUTION.

5. To re-assemble filter, insert element into filter head with round washer entering first.

6. Gasket is put on filter body. Spring is located in filter body so that when filter body and head are put together, spring will hold element against head.

7. Tighten body and head with 75 ft. lbs. (101.7 Nm) torque.

8. After filter has been re-assembled to engine, point at gasket and other line connections should be checked with soap suds, with fuel turned on, to be sure there are no leaks.

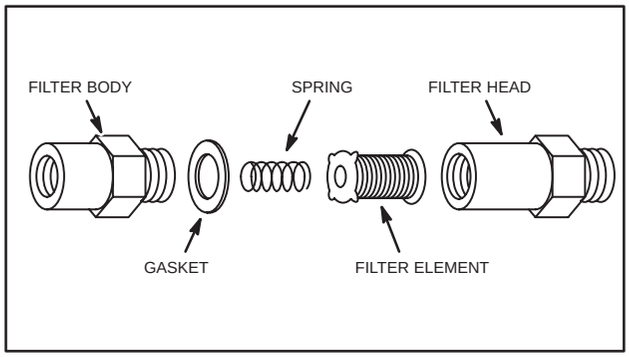

Fig. 301 – ELEMENT ASSEMBLY

To Adjust Automatic Choke

Loosen set screw on lever of thermostat assembly. Slide lever to right or left on shaft to insure free movement of choke link in any position. Rotate thermostat shaft clockwise until stop screw strikes tube, Fig. 302. Hold in this position and set lever on the thermostat shaft so that choke valve will be held open about 1/8" from closed position. Use a 1/8" rod or drill to measure space between the air horn and edge of choke valve. Then tighten set screw in lever.

AIR CLEANERS, CARBURETORS & GOVERNORS, (cont'd)

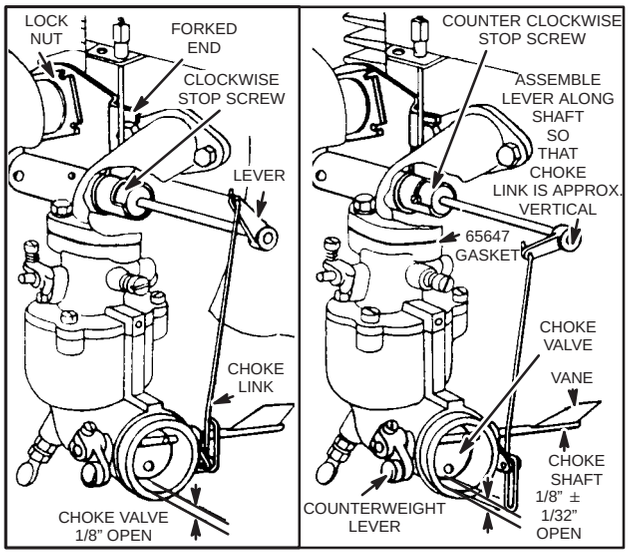

Fig. 302 *Fig. 303*
AUTOMATIC CHOKE

Rotate thermostat shaft counterclockwise until stop screw strikes the opposite side of tube, Fig. 303. Then open choke valve manually until it stops against the top of the choke link opening. The choke valve should now be open approximately 1/8" as before.

Check position of counterweight lever. with the choke valve in wide open position (horizontal), the counterweight lever should also be in a horizontal position with free end to right.

Operate the choke manually to be sure that all parts are free to move without binding or rubbing at any position.

FUEL PUMPS (ECCENTRIC OPERATED)

Replace Pump Diaphragm

Remove pump from cylinder and then remove four screws to separate pump head from pump body.

With a narrow punch, drive lever pin out until pump lever is loose. Pin may then be driven in either direction, but need not be removed entirely. Remove old diaphragm, but leave diaphragm spring in pump body.

Place new diaphragm into pump body with the slot in shaft at right angles to the pump lever. Diaphragm spring should fit into the cup under the diaphragm. Without the lever spring, insert the pump lever into body holding the diaphragm down. Fit the hook at the end of lever into the slot in diaphragm shaft, Fig. 304.

Assemble Fuel Pump

Align holes in lever and body, then drive lever pin into place. Place lever spring into body with inner end of spring over the projection in pump body, then use a screwdriver to force outer end of spring into body until it slips over the projection on lever, Fig. 304, Ill. 2. Place pump head on body and partially insert the four screws. Press pump lever down as far as possible and then tighten the four screws.

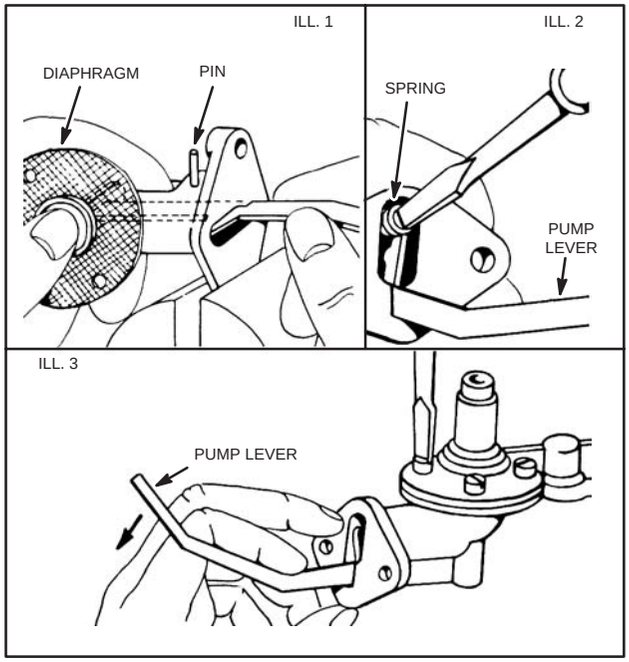

Fig. 304 – FUEL PUMP

To Install Fuel Pump

Place a liberal supply of grease or gear lubricant on the portion of fuel pump lever that contacts the crankshaft, Fig. 305. Assemble fuel pump to cylinder using new gasket. Keep mounting face of fuel pump parallel to mounting face of cylinder while inserting lever of fuel pump. The lever must ride in the narrow groove which is located on the crankshaft between the gear and the counterweight. Revolve crankshaft to be sure that fuel pump is correctly installed. Assemble fuel pipe from outlet of carburetor. Fuel supply pipe should be connected to the inlet of the fuel pump.

AIR CLEANERS, CARBURETORS & GOVERNORS, (cont'd)

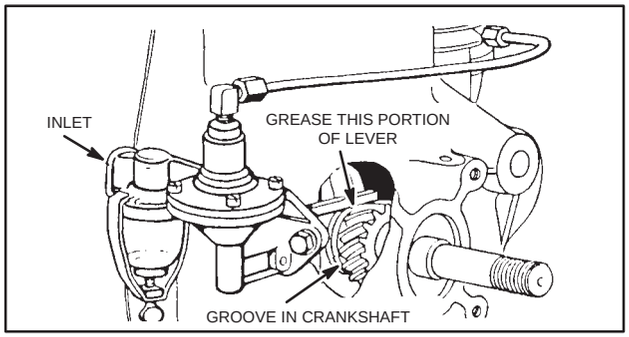

Fig. 305 – INSTALLING FUEL PUMP

To Assemble Fuel Pump

Place a liberal supply of grease or gear lubricant on the portion of fuel pump lever that contacts the crankshaft, Fig. 306. Assemble fuel pump to cylinder using new gasket. Keep mounting face of fuel pump parallel to mounting face of cylinder while inserting lever of fuel pump. The lever must ride in the narrow groove which is located on the crankshaft between the gear and the counterweight. Revolve crankshaft to be sure that fuel pump is correctly installed.

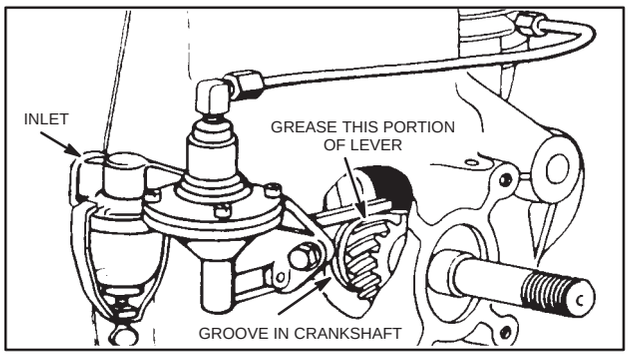

Fig. 306 – FUEL PUMP

Assemble fuel pipe from outlet of fuel pump to inlet of carburetor. Fuel supply pipe should be connected to the inlet of the fuel pump.

To Replace Fuel Pump Diaphragm

Remove pump from cylinder and then remove four (4) screw to separate pump head from pump body, Fig. 307, Ill. 3.

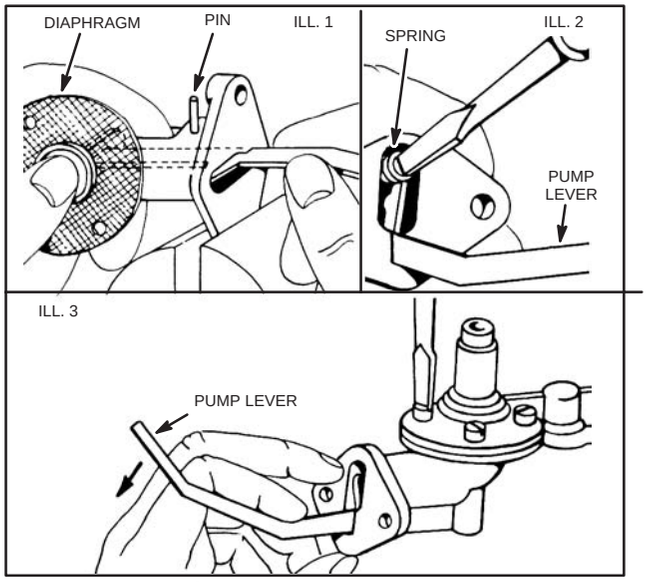

Fig. 307 – FUEL PUMP

With a narrow punch, drive lever pin out until pump lever is loose, Fig. 307, Ill. 1. Pin may than be driven in either direction, but need not be removed entirely. Remove old diaphragm, but leave diaphragm spring in pump body.

Place new diaphragm into pump body with the slot in shaft at right angles to the pump lever. Diaphragm spring should fit into the cup under the diaphragm. without the lever spring, insert the pump lever into body holding the diaphragm down. Fit the hook at the end of lever into the slot in diaphragm shaft, Fig. 307, Ill. 1.

Align holes in lever and body, then drive lever pin into place. Place lever spring into body with inner end of spring over the projection in pump body, then use a screw driver to force outer end of spring into body until it slips over projection on lever, Fig. 307, Ill. 2. Place pump head on body and partially insert the four (4) screws. Press pump lever down as far as possible and tighten the four (4) screws securely, Fig. 307, Ill. 3.

Fuel Pumps (Crankcase Vacuum Operated)

Some models are factory or field equipped with fuel pumps operated by crankcase vacuum. Fuel pumps may be mounted on directly on carburetor, Fig. 308, or on a mounting bracket, Fig. 309. Crankcase vacuum is obtained by a fitting on crankcase cover, Fig. 310, a fitting on dipstick tube, Fig. 309, a hollow bolt and fitting, Fig. 310, or from crankcase breather valve, Fig. 308.

AIR CLEANERS, CARBURETORS & GOVERNORS, (cont'd)

Briggs & Stratton engines have used three types of fuel pumps, integral with the carburetor, such as used on Model Series 253400, 255400, Page 50 of this section, and metal body pumps, Page 60.

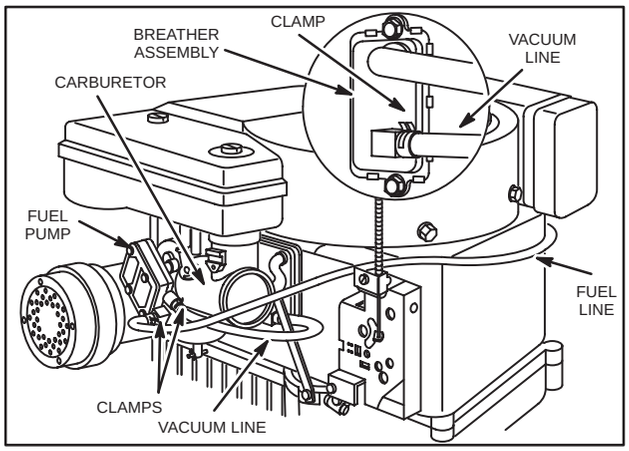

Fig. 308 – PUMP ON CARBURETOR, BREATHER VALVE VACUUM

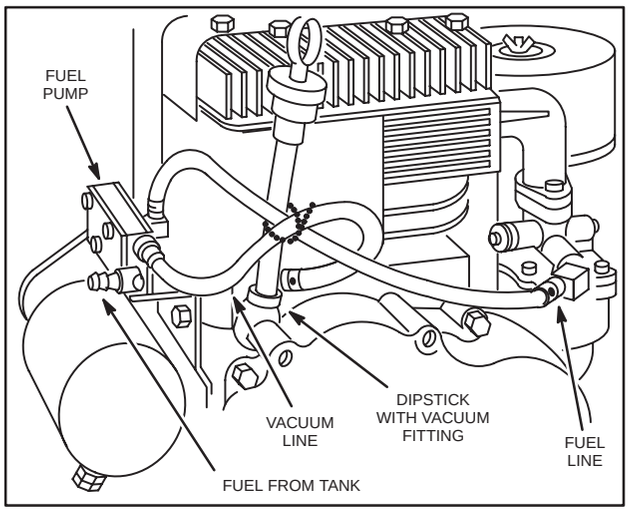

Fig. 309 – PUMP ON BRACKET, DIPSTICK TUBE VACUUM

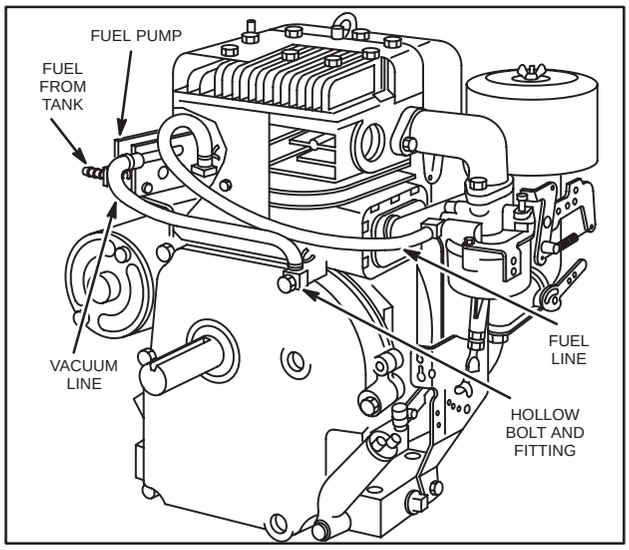

Fig. 310 – VACUUM FROM HOLLOW BOLT

Operation

Typical operation of a fuel pump is illustrated in Fig's. 311, 312 and 313. Any restriction in fuel or vacuum lines will affect operation. Also any leaks that cause air to get into fuel line or reduce vacuum in vacuum line will reduce performance.

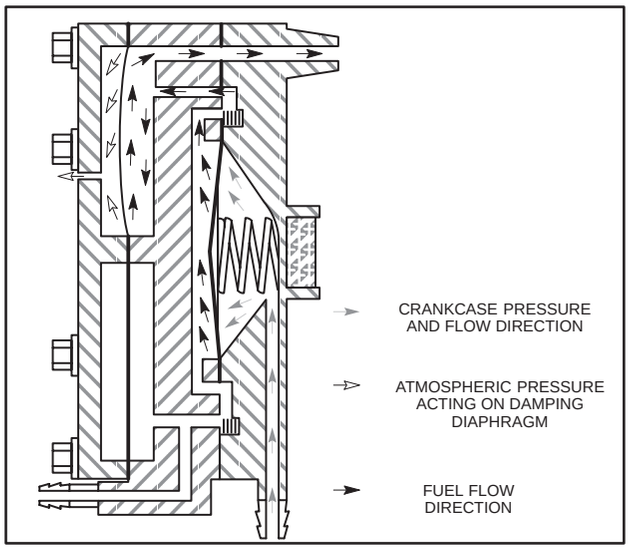

Fig. 311 – FUEL FLOW WITH CRANKCASE PRESSURE, TYPICAL

AIR CLEANERS, CARBURETORS & GOVERNORS, (cont'd)

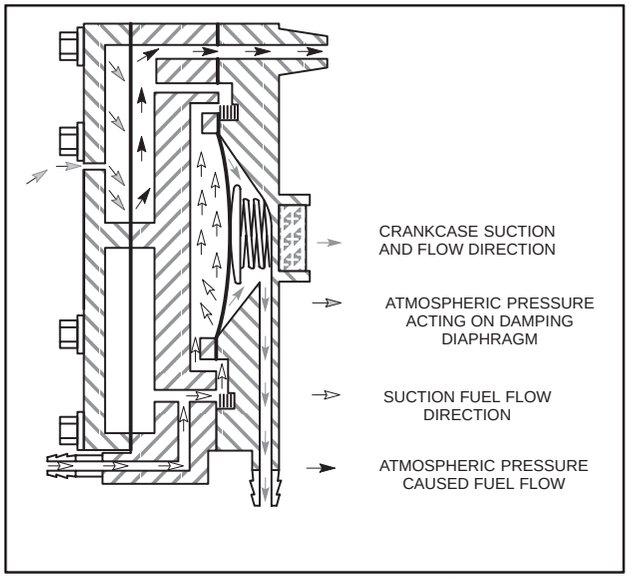

Fig. 312 – FUEL FLOW CRANKCASE VACUUM, TYPICAL

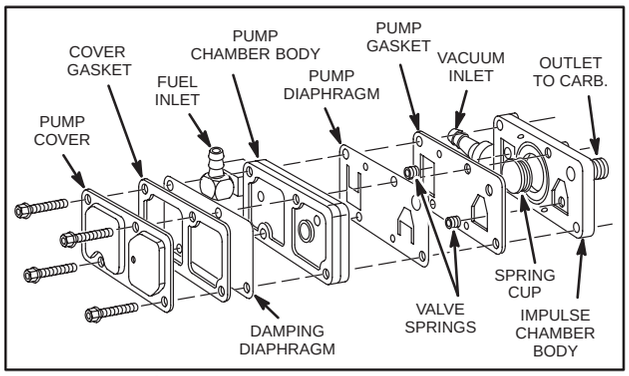

Fig. 313 – EXPLODED VIEW, TYPICAL FUEL PUMP

To Service Metal Body Pump

1. To service fuel pump, remove pump from carburetor or mounting bracket.
2. When removing fuel supply line from tank to pump, be sure to plug fuel line or turn off fuel valve, if so equipped.

WARNING: DO NOT screw a bolt into fuel line to plug it. Bolt threads cut inside of hose causing debris in the fuel system.

3. Disassemble fuel pump by removing four 1/4" head cap screws from pump cover.
4. Separate pump cover, pumping chamber and impulse chamber.
5. Discard old gaskets, diaphragms and springs. Clean pump parts in carburetor solvent or lacquer thinner.

A repair kit is available. See Illustrated Parts List. Kit includes all parts needed.

6. Install chamber gasket using locator pins.
7. Place springs in spring recesses and install pump diaphragm on locator pins.
8. Place pump chamber body on impulse body using locator pins.
9. Place damping diaphragm and cover gasket on pump body.
10. Install cover and four screws.
11. Torque screws to 10 to 15 in. lbs. (1.1 to 1.7 Nm) See Fig. 313 for exploded view.

To Adjust Automatic Choke

Hold choke shaft so thermostat lever is free. At room temperature the screw in the thermostat collar should be in the center of the stops, if not, loosen stop screw and adjust.

Loosen set screw on lever of thermostat assembly. Slide lever to right or left on shaft to insure free movement of choke link in any position. Rotate thermostat shaft clockwise until stop screw strikes tube, Fig. 314. Hold in position and set lever on the thermostat shaft so that choke valve will be held open about 1/8" from closed position. Then tighten set screw in lever.

Rotate thermostat shaft counterclockwise until stop screw strikes the opposite side of tube, Fig. 314. Then open choke valve manually until it stops against the top of the choke link opening. The choke valve should now be open approximately 1/8" as before.

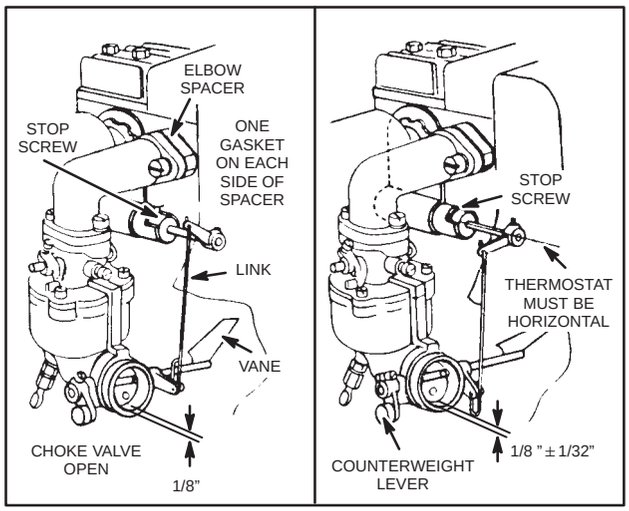

Fig. 314 – ADJUST AUTOMATIC CHOKE

Check position of counterweight lever. With the choke valve in wide open position (horizontal) the counterweight lever should also be in a horizontal position with free end toward the right.

Operate the choke manually to be sure that all parts are free to move without binding or rubbing in any position.

AIR CLEANERS, CARBURETORS & GOVERNORS, (cont'd)

GOVERNORS

The purpose of the governor is to maintain – within certain limits – a desired engine speed even though the load may vary. The governor spring pulls throttle open, while governor action closes throttle. The speed at which these two forces are balanced is called the governed speed. The term engine speed as used herein, indicates the RPM when operating under the control of the governor and does not include idling speeds.

Two (2) different types of governors are used:

1. **MECHANICAL GOVERNOR.** This is a centrifugal type operated by the cam gear and is linked to the carburetor throttle, Fig. 315.

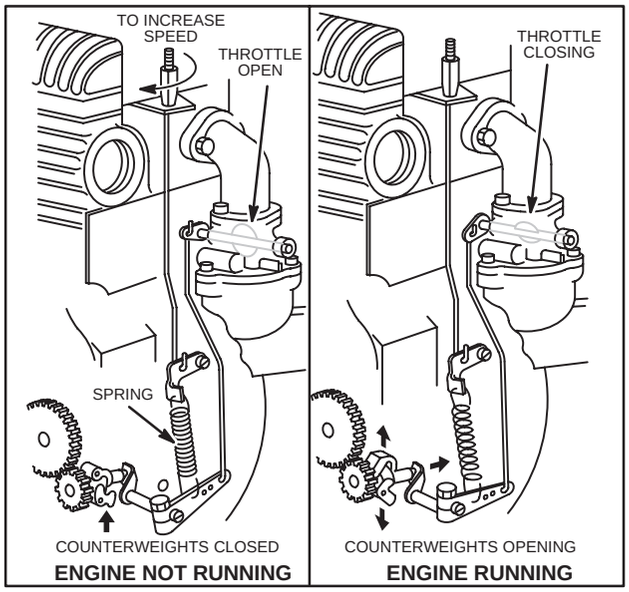

Fig. 315 – MECHANICAL GOVERNOR, TYPICAL

2. **PNEUMATIC GOVERNOR**. This operates by air pressure from the flywheel against an air vane which in turn is linked to the carburetor throttle, Fig. 316.

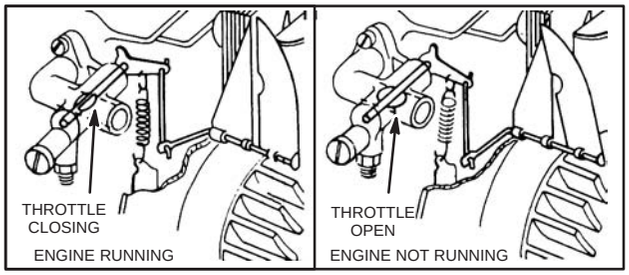

Fig. 316 – PNEUMATIC GOVERNOR, TYPICAL

To Set Governor for Correct Engine Speed

First check Section 1, Table No. 5, Page 10 or Table No. 6, Page 13 to determine the correct engine speed. Then, with the engine running, increase or decrease the tension on the governor spring (or throttle spring) until the desired speed is obtained. A tachometer should be used for checking the engine speed.

To Adjust Mechanical Governor Models A, B, FJ, K, L, M, R, S, T, W, Z, ZZ

If the governor lever has become loosened or removed from the governor shaft, reset as follows:

Loosen screw holding lever on the governor crank. This should be done with the carburetor attached to the engine and hooked up to the governor lever with throttle link.

Push the governor lever **COUNTERCLOCKWISE** as far as it will go. Hold in this position and turn the governor crank **CLOCKWISE** with pliers as far as it will go. Tighten screw that holds governor lever to the crank until it is snug, but not tight. Push governor lever **CLOCKWISE** as far as it will go, and tighten screw securely.

Models 9, 14, 23

Loosen screw holding governor lever to governor crank. Push the lever **CLOCKWISE** as far as it will go. Hold it in this position and turn the governor crank **COUNTERCLOCKWISE** as far as it will go. This can be done with a screw driver. Tighten the screw that holds the governor lever to crank until it is snug, but not tight. Now push governor lever **COUNTERCLOCKWISE** as far as it will go, then tighten screw securely. These instructions are the same as Models, A, B, etc. above except that the movements of lever and crank are exactly the opposite.

Model I, N

There is no adjustment between governor lever and governor crank on these models. However, governor action can be changed by inserting governor link or spring in different holes of governor and throttle levers, Fig. 317. In general, the closer to the pivot end of the lever, the smaller the difference between load and no-load engine speed. The farther from the pivot end, the steadier the governing will be while engine is running under load and the easier to eliminate throttle hunting. The standard setting is shown in Fig. 317.

AIR CLEANERS, CARBURETORS & GOVERNORS, (cont'd)

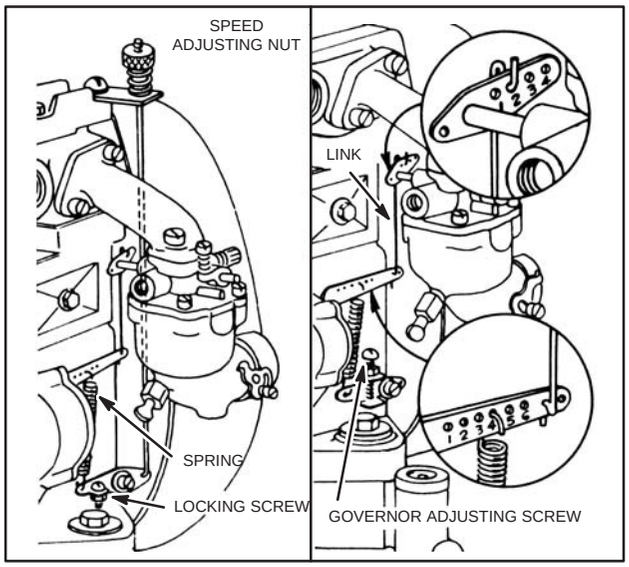

Fig. 317 – GOVERNOR ADJUSTMENT

To Adjust Pneumatic Governor

The bracket which carries the bearing fits the armature with no more than 1/16" space between the free side and the mounting, Fig. 318, Ill. 1. This this should be parallel with the mounting surface. If the position of the bracket is not so, it should be bent back into position.

The governor shaft bearing must be in alignment and a free fit on the shaft, Fig. 318, Ill. 2. If they have been forced out of line, the bracket must be straightened or the bearing enlarged to restore free movement. The governor vane should be checked for clearance of both edges so that it does not touch either the bracket or the blower housing. To restore clearance throughout the vane travel, it may be necessary to straighten the bracket and shaft.

The vane should stop at from 1/8" to 1/4" from the magneto coil when assembled and linked to the throttle shaft, Fig. 318, Ill. 3. This may be adjusted by springing the vane carefully in the direction indicated while holding the shaft. If the soldered joints have been broken loose, they may be resoldered to produce the above mentioned position with closed throttle.

As viewed from the blower side, the wire link connecting the governor are to the carburetor throttle lever should stand in a practically vertical position when the throttle is wide open, Fig. 318. Ill. 4. Use either hole in governor arm to obtain this vertical position. If the above adjustments have been made and the upper end of link binds on the throttle lever, it may be relieved by prying the lower end of the link outwardly until the link bends slightly and binding is eliminated, Fig. 318, Ill. 5.

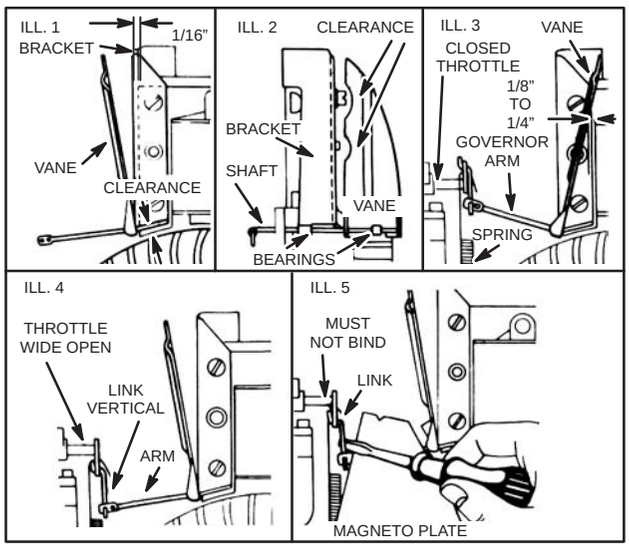

Fig. 318 – ALIGNING GOVERNOR PARTS

Mechanical Governor Parts

Inspect governor parts for wear. Worn parts can cause throttle hunting or compete failure of the governor to function.

If a hole is worn in the flat face of the governor crank, it should be discarded as this will cause jerky, uneven action and result in throttle hunting, Fig. 319. The governor plunger wears at both ends. The ends should be round and smooth.

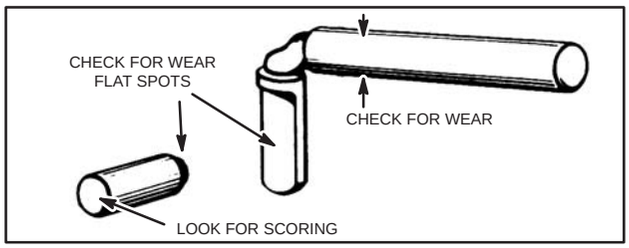

Fig. 319 – GOVERNOR CRANK AND PLUNGER

Check the tangs on the governor weights. They should be square and smooth. If a tang is broken, the governor will not operate. If weights bind or stick, the gear should be replaced, Fig. 320. The shaft hole in the governor gear may be checked with a new shaft.

AIR CLEANERS, CARBURETORS & GOVERNORS, (cont'd)

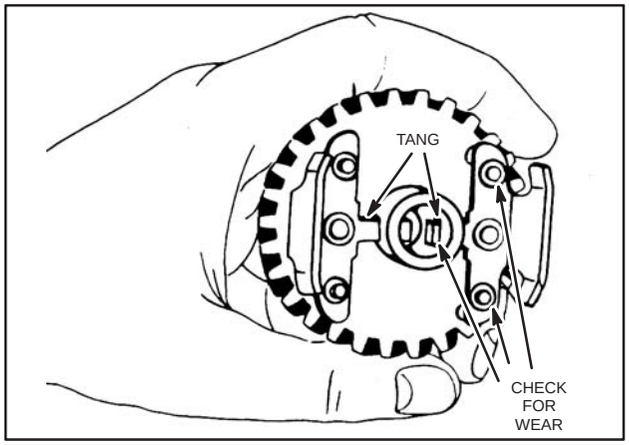

Fig. 320 – GOVERNOR TANGS

The governor crank should fit the bushing freely, but not loosely. Use a new crank to test bushing and rebush if necessary. It will be necessary to ream the bushing after pressing it in. Use an expansion reamer and ream just enough so that crank moves freely.

Check the holes in the governor link, the pins on the governor lever, and on the carburetor throttle lever. Much of the governor action can be lost taking up the slack due to wear at these points, Fig. 321.

NOTE: Be sure to use crankcase support while replacing either governor shaft or bushing. Failure to do so may result in cracked or broken crankcases.

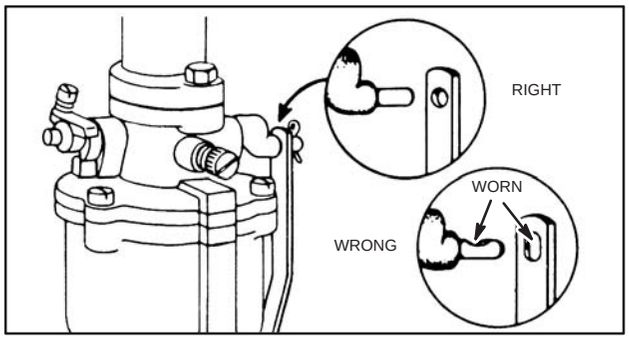

Fig. 321 – GOVERNOR LINK

Model A

The governor bushing is threaded and must be removed before gear can be removed from shaft. The gear should fit on shaft so that gear may revolve freely but does not wobble. Be sure air relief hole is open, Fig. 322.

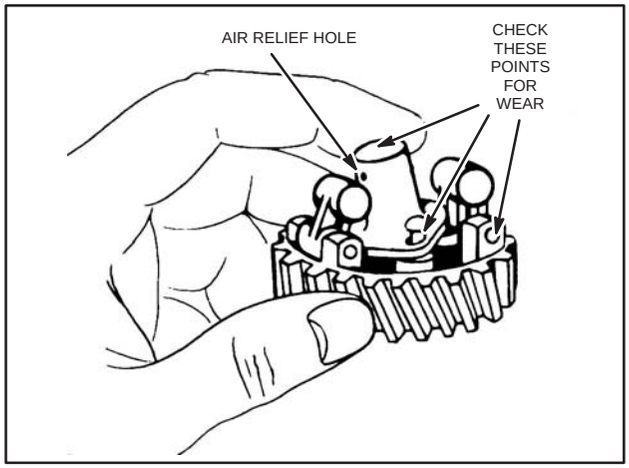

Fig. 322 – GOVERNOR GEAR

To Replace Governor Gear Shaft

The shaft on most models can be pressed into place from the outside at the same time driving out the old shaft. Exceptions are as follows:

Models 9, 14, 23

The old governor shaft should be driven inwards with a small punch. The new shaft must be installed from inside the crankcase. The outer end of the shaft should be flush with the cylinder. The same shaft, Part #291192, is used on Models 14, 23.

Models L, M, R, S, T

The governor shaft is held in place with two (2) screws.

Mechanical Governor Models N, 6, 8 (Cast Iron)

To Disassemble

Loosen the two mounting screws to remove governor housing. The cup can be pulled off the governor gear and the gear will slide off the shaft, Fig. 323. To disassemble the governor crank, drive roll pin out at end of governor lever; remove governor crank bushing. Then pull governor crank out of the housing.

AIR CLEANERS, CARBURETORS & GOVERNORS, (cont'd)

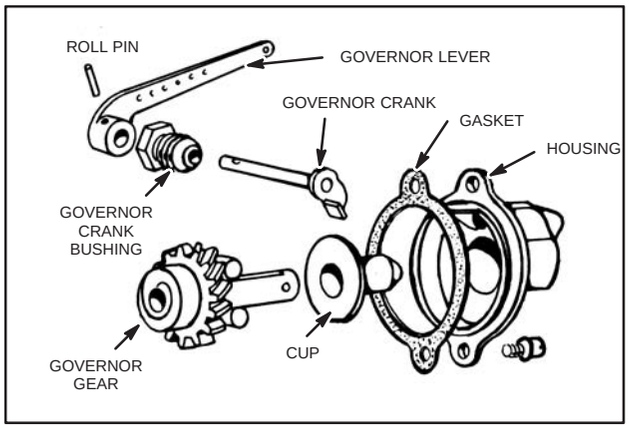

Fig. 323 – GOVERNOR HOUSING AND GEAR ASSEMBLY

To Re-Assemble

To assemble governor crank, bushing and lever to housing, push governor crank, lever end first, into housing. Slip bushing onto shaft; then thread bushing into housing and tighten securely. Place lever on the shaft with the governor crank in the position shown in Fig. 324. Install roll pin into governor lever and shaft. Place governor gear on shaft in cylinder. Place gasket on governor housing; then assemble governor housing to the cylinder and tighten in place with two mounting screws.

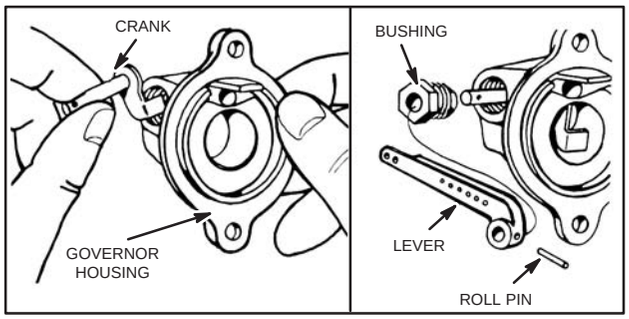

Fig. 324 – INSTALL CRANK AND LEVER

To Adjust

There is no adjustment between governor lever and governor crank on these models. However, governor action can be changed by inserting governor link or spring in different holes of governor and throttle levers, Fig. 325. In general, the closer to the pivot end of the lever, the smaller the difference between load and no-load engine speed. The engine will begin to "hunt" if the spring is brought too close to the pivot point. The further from the pivot end, the less tendency to "hunt" but the greater the speed drop with increasing load. If the governed speed is lowered, the spring can usually be moved closer to the pivot. The standard setting is shown in Fig. 325.

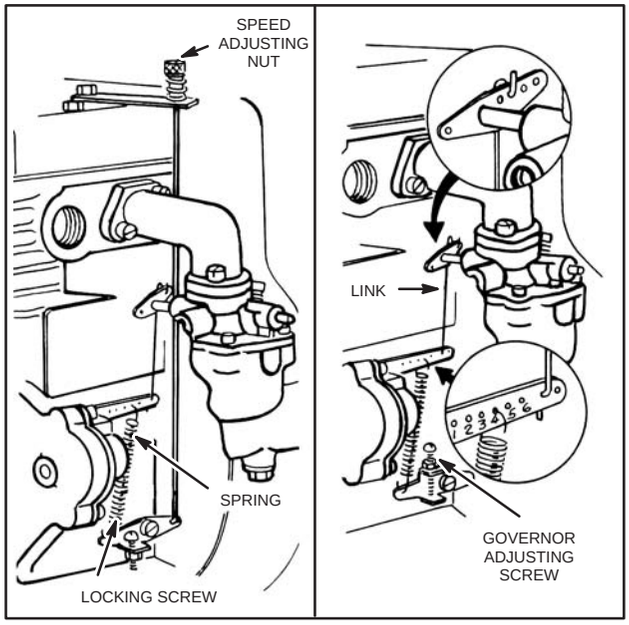

Fig. 325 – MECHANICAL GOVERNOR LINKAGE

Cast Iron Model Series 9, 14, 19, 19D, 23, 23A, 23C, 23D, 191400, 193400, 200000, 230000, 240000, 300000, 320000

Typical governor systems used on horizontal shaft models are illustrated in Fig. 326.

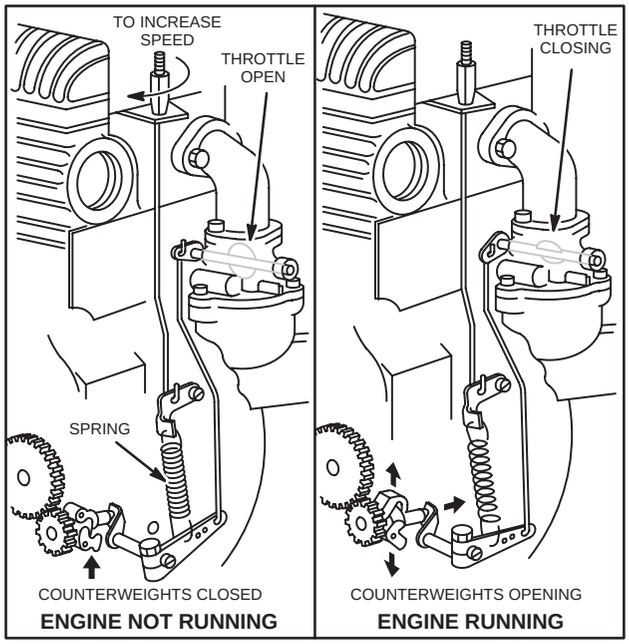

Fig. 326 – MECHANICAL GOVERNOR

AIR CLEANERS, CARBURETORS & GOVERNORS, (cont'd)

The only disassembly necessary is removing the governor assembly as one unit from the governor gear shaft in the crankcase, Fig. 326.

To Disassemble

Remove engine base. Loosen governor lever bolt and nut. Remove governor lever from governor crank assembly. Remove hair pin and washer from governor crank. Remove any paint or burrs from governor crank. Remove governor crank. Current production engines have a spacer on the governor crank. Earlier production engines have a long bushing without spacer. Slide governor gear assembly off governor shaft.

To Replace Governor Shaft Bushing

Press old bushing out of cylinder. Press new bushing into cylinder until bushing is flush with outside surface of cylinder. Finish ream new bushing with Tool #19333, governor bushing reamer, using Stanisol or kerosene as lubricant.

To Assemble Governor

Assemble governor gear and cup assembly on governor shaft in cylinder. Slide governor crank (and spacer, when used) through bushing from inside cylinder, Fig. 327. Install lever, governor spring, and links.

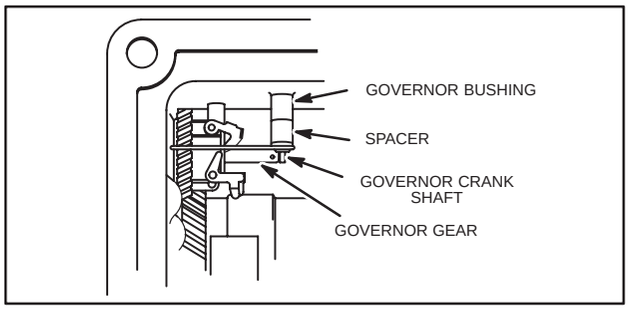

Fig. 327 – ASSEMBLING GOVERNOR

To Adjust before Running

Loosen screw holding governor lever to governor shaft. Place throttle in high speed position. Hold throttle in this position and with a screwdriver turn governor shaft COUNTERCLOCKWISE as far as it will go. Tighten screw holding governor lever to governor shaft to 35-45 in. lbs. torque, Fig. 328. Before starting engine, manually move governor linkage to check for any binding.

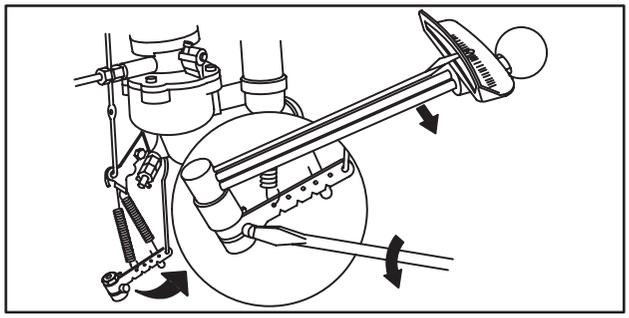

Fig. 328 – ADJUSTING GOVERNOR

Adjusting Top-No-Load Speed – Cast Iron Model Series 191400, 193400, 200000, 230000, 240000, 300000, 320000

1. Loosen lower stop nut.
2. Adjust top stop nut to obtain top-no-load RPM as listed in Engine Sales Manual, MS-4052 or MS-6225, Service Engine Sales Manual microfiche under note column, or MAXIMUM RPM TABLE at end of each manual for the engine model.
3. After speed is set, tighten lower stop nut (except for remote control. Refer to Fig. 329.

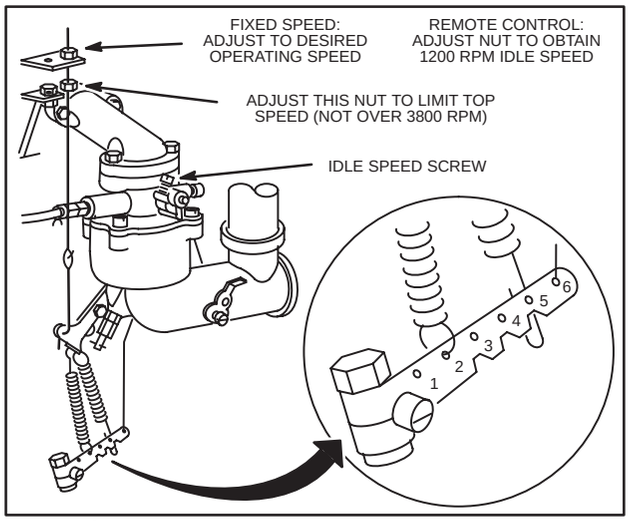

Fig. 329 – ADJUSTING TOP LOAD RPM

To adjust governed idle refer to Pages 97 & 98, Governor Controls and Carburetor Linkages.

Fixed Speed Operation

Loosen lower stop nut. Adjust top stop nut to obtain top-no-load RPM as listed in Engine Sales Manual, MS-4052 or MS-6225, Service Engine Sales Manual microfiche under note column, or MAXIMUM RPM TABLE at end of each manual for the engine model. After speed is set, tighten lower stop nut, Fig. 329.

AIR CLEANERS, CARBURETORS & GOVERNORS, (cont'd)

Remote Control Operation

Adjust lower stop nut to obtain top-no-load RPM as listed in Service Engine Sales Manual, MS-4052 or MS-6225, Service Engine Sales Manual microfiche under NOTE column, or MAXIMUM RPM TABLE at end of each manual for the engine model, Fig. 329.

PNEUMATIC GOVERNORS – ALUMINUM MODEL SERIES 90000, 110000

To Replace Governor Spring Model Series 90000, 110000

The governor springs used on engine Model Series 90000, 110000 are made with double end loops for a secure attachment and proper governor regulation. Springs with double end loops are easily removed and installed by following the procedure shown below.

WARNING: DO NOT use a needle-nosed pliers or the end loops of the governor spring will be deformed. When the governor spring is correctly installed, the spring will be positioned as shown in Fig. 330.

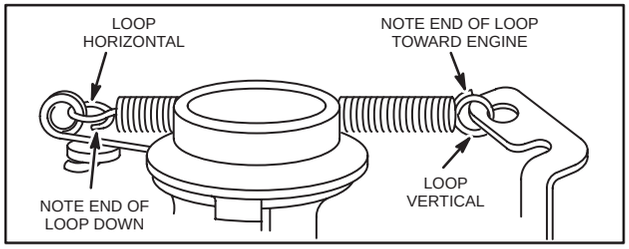

Fig. 330 – CORRECT POSITION OF SPRING

To Remove Spring

1

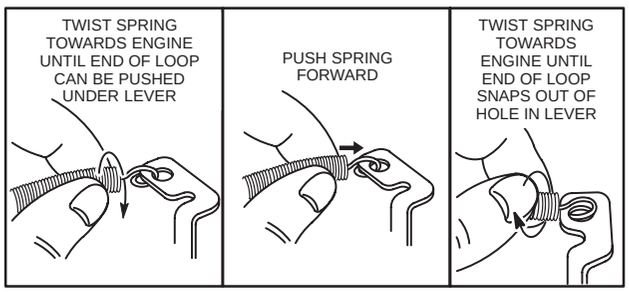

Fig. 331 – REMOVE SPRING FROM CONTROL LEVER

2

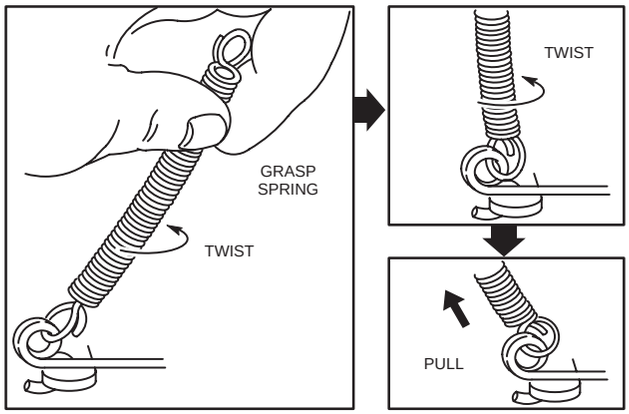

Fig. 332 – REMOVE SPRING FROM EYELET IN LINK

To Install Spring

1

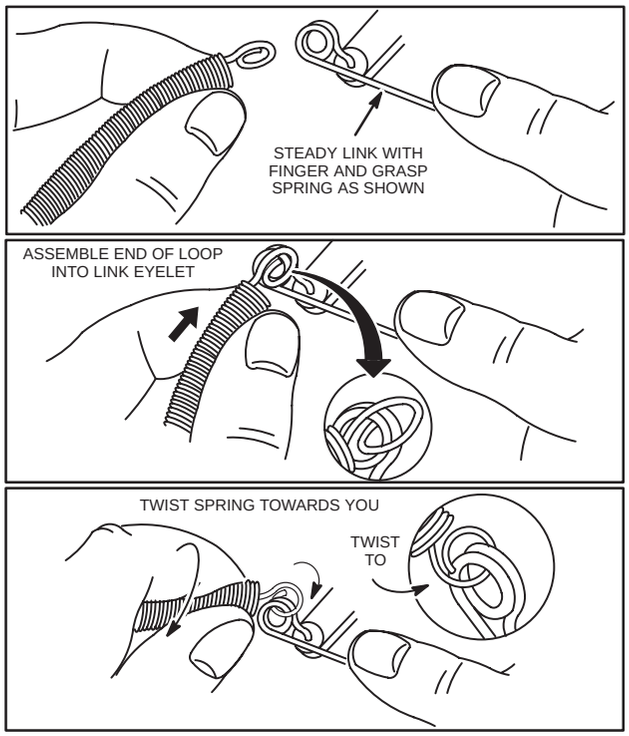

Fig. 333 – ASSEMBLE SPRING TO LINK EYELET

AIR CLEANERS, CARBURETORS & GOVERNORS, (cont'd)

2

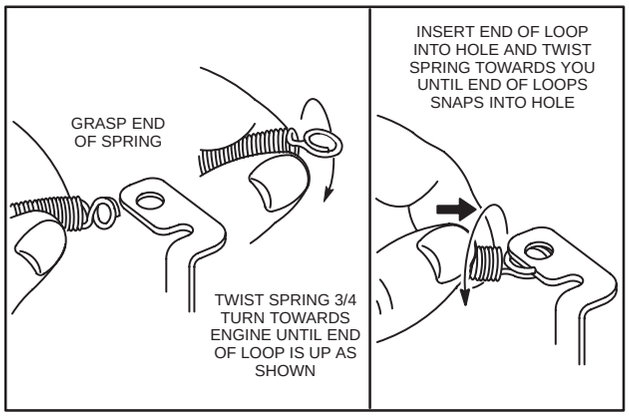

Fig. 334 – ASSEMBLE SPRING TO CONTROL LEVER

MECHANICAL GOVERNORS – ALUMINUM MODEL SERIES

Models 6B, 8B (Aluminum Cylinders) (Governor Lever and Shaft Mounted on Crankcase Cover)

To Disassemble

To service governor, remove crankcase cover. Loosen the screw on the governor lever and pull lever from governor crank. Loosen the two mounting screws to remove gear housing, Fig. 335. As the housing is removed, the governor gear will slip off the shaft. There is a steel thrust washer on the shaft between the gear and the governor housing.

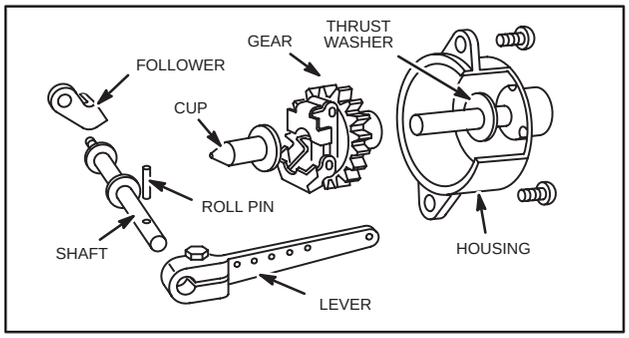

Fig. 335 – MECHANICAL GOVERNOR PARTS

To remove governor lever shaft, remove roll pin and washer. Unscrew governor lever shaft by turning clockwise. Remove governor lever shaft, Fig. 335.

To Re-Assemble

Push governor lever shaft into crankcase cover, with threaded end in. Assemble small washer on the inner end of the shaft, then screw shaft into governor crank follower by turning shaft counterclockwise. Tighten securely. Turn shaft until follower points down as illustrated, Fig. 336. Place washer on outside end of shaft. Install roll pin. The leading end of the pin should just go through the shaft so pin protrudes from only one side of shaft.

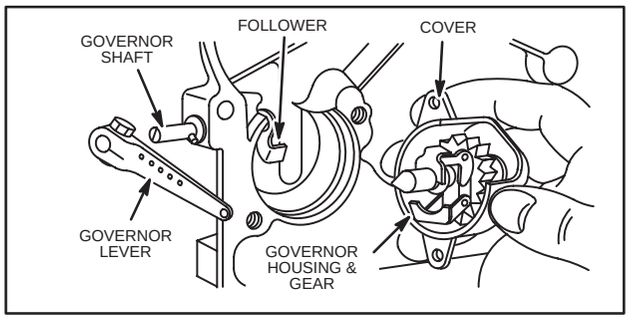

Fig. 336 – ASSEMBLING MECHANICAL GOVERNOR

Place thrust washer and then governor gear on shaft in gear housing. Hold crankcase cover in a vertical (normal) position and then assemble housing with gear in position so that point of steel cup on gear rests against crank follower. Tighten housing in place with two mounting screws, Fig. 336.

Assemble governor lever to lever shaft with lever pointing downward at about a 30° angle. Adjustment will be made later when carburetor linkage is assembled.

To Adjust

With crankcase cover, carburetor and all linkage installed, loosen screw holding governor lever to governor shaft. Place throttle in high speed position. Hold throttle in this position and with a screwdriver turn governor shaft COUNTERCLOCKWISE as far as it will go. Tighten screw holding governor lever to governor shaft to 35-45 in. lbs. torque, Fig. 337. Before starting engine, manually move governor linkage to check for any binding. Correct any binding in linkage or carburetor.

AIR CLEANERS, CARBURETORS & GOVERNORS, (cont'd)

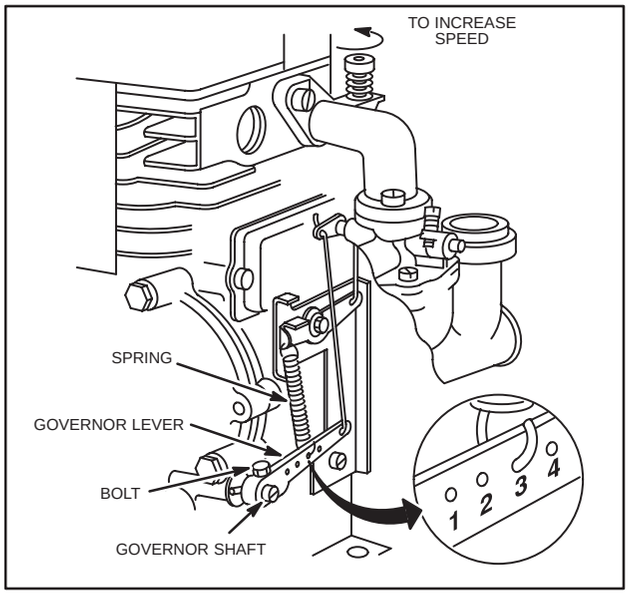

Fig. 337 – GOVERNOR ADJUSTMENT

Aluminum Model Series 80000 (Governor Crank in Cylinder), 100200, 100900, 130000, 140000, 170000, 190000, 220000, 250000

The governor used on the horizontal shaft models is illustrated in Fig. 338, right side. The governor used on the vertical shaft models is incorporated with the oil slinger, Fig. 338, left side.

The only disassembly necessary is removing the governor assembly as one unit from the shaft on the crankcase cover on horizontal models. On vertical shaft models, it is removed as part of the oil slinger. Further disassembly is unnecessary.

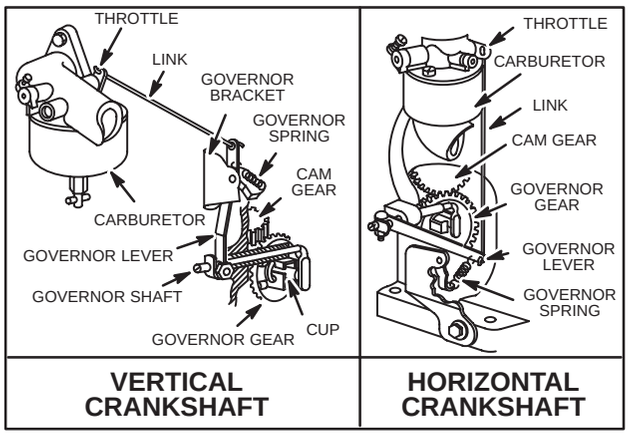

Fig. 338 – LARGE ALUMINUM ENGINES

To Re-Assemble

On horizontal crankshaft models, the governor rides on a short stationary shaft and is retained by the governor shaft, with which it comes in contact after the crankcase cover is secured in place. Press governor cup against crankcase cover to seat retaining ring on shaft, prior to installing crankcase cover. It is suggested that the assembly of the crankcase cover be made with the crankshaft in a horizontal position.

The governor shaft should hang straight down parallel to the cylinder axis, Fig. 339. If the governor shaft is clamped in an angular position, pointing toward the crankcase cover, it is possible for the end of the shaft to be jammed into the inside of the governor assembly, resulting in broken parts when the engine is started. After the crankcase cover and gasket are in place, install cover screws. Be sure that screw "A," Fig. 340, has nonhardening sealant on threads of screw. Complete installation of remaining governor linkages and carburetor and then adjust governor shaft and lever.

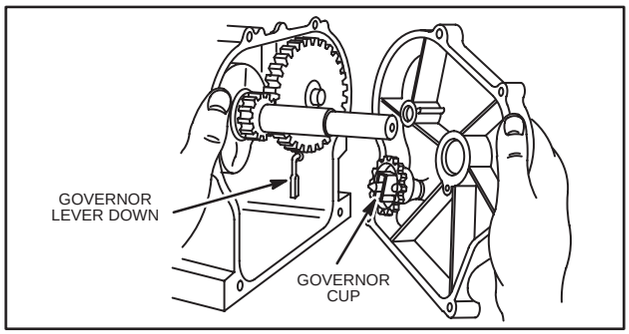

Fig. 339 – SHOWING GOVERNOR CRANK PROPER POSITION

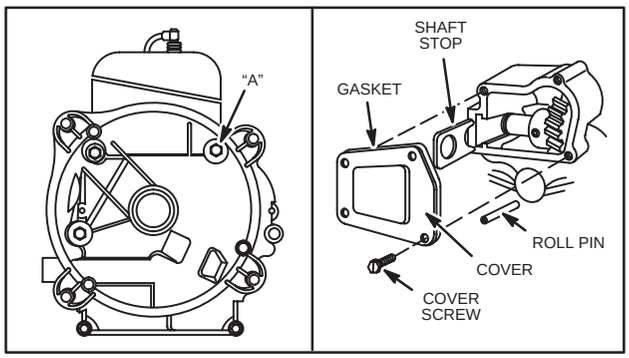

Fig. 340 – SEALANT ON SCREW "A"

AIR CLEANERS, CARBURETORS & GOVERNORS, (cont'd)

Vertical Crankshaft Model Series 100900, 130000, 170000, 190000, 220000, 250000

The governor used on the vertical shaft models is incorporated with the oil slinger, Fig's. 341 and 343. It is removed as part of the oil slinger, Fig. 341. Further disassembly is unnecessary.

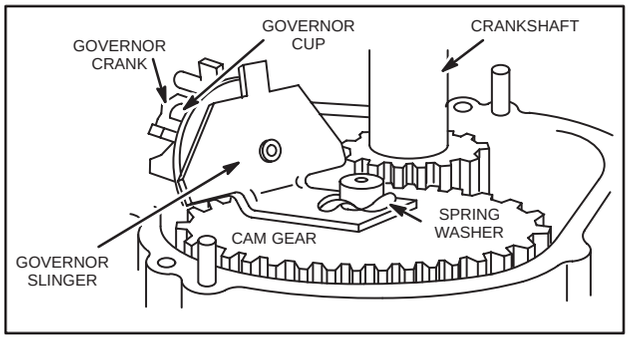

Fig. 341 – VERTICAL SHAFT GOVERNOR AND OIL SLINGER ASSEMBLY, TYPICAL

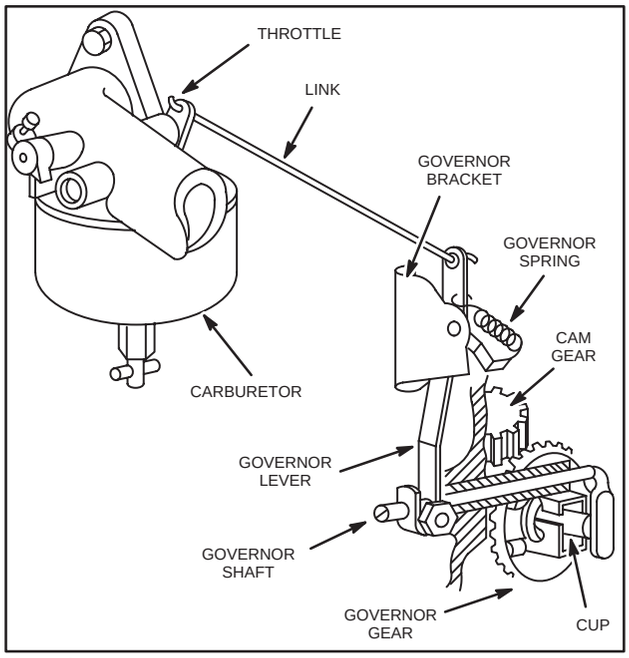

Fig. 343 – MODEL SERIES 170000, 190000, 220000, 250000, TYPICAL

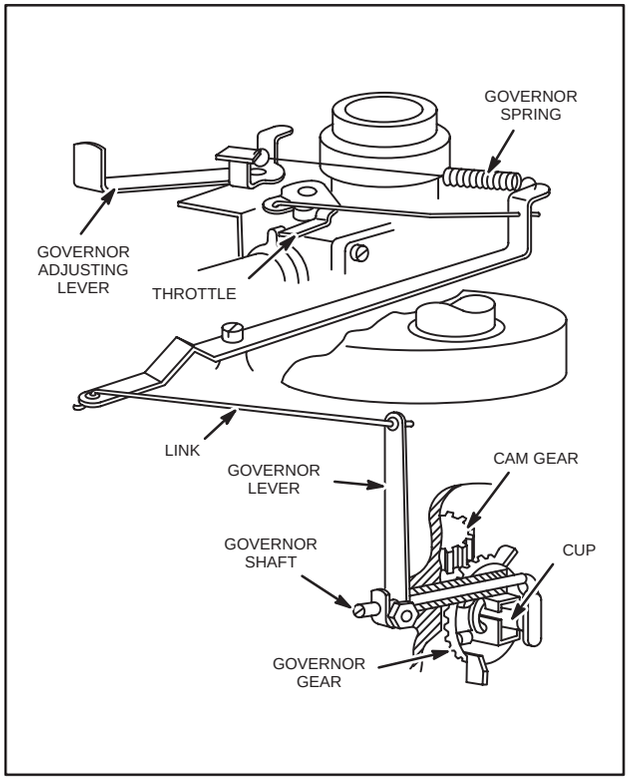

Fig. 342 – MODEL SERIES 100900, 130000

To Assemble Governor – Model Series 100900, 130900, 131900, 170000, 190000, 220000, 250000, Vertical Crankshaft

To Assemble

1. On vertical crankshaft models the governor is part of the oil slinger and is installed as shown in Fig. 344.

NOTE: Models 100900, 130700, 130900, 131900, use spring washer as shown in Fig. 344.

2. Before installing sump be sure that governor cup is in line with governor shaft paddle.

3. Install sump and gasket being sure screw "A," Fig. 345 has nonhardening sealant on threads such as Permatex® II.

AIR CLEANERS, CARBURETORS & GOVERNORS, (cont'd)

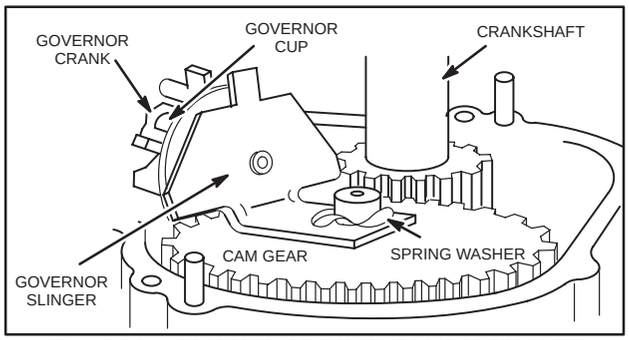

Fig. 344 – SHOWS SPRING ON CAMSHAFT AFTER GOVERNOR IS INSTALLED. MODELS 100900 AND 130700, 130900, 131900, ONLY.

NOTE: On Model Series 130900 and equipped with right angle auxiliary drive power take-off, the spring washer is not to be used.

NOTE: On right angle auxiliary drive power take-off models, screw "A" does not need sealant but the four screws holding the gear sump cover require sealant, Fig. 345.

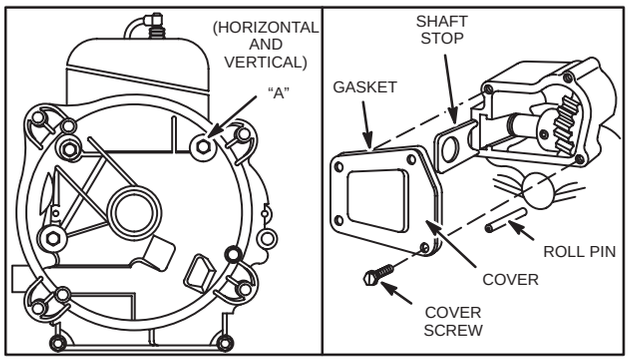

Fig. 345 – SEALANT ON SCREW "A"

4. Complete installation of remaining governor linkages and carburetor. Then adjust governor shaft and lever. See "Adjustments."

NOTE: If governor shaft bushing is replaced, it must be finished reamed with Tool #19333, Governor Bushing Reamer, for 1/4" (6.35 mm) governor crank or with Tool #19058, Governor Bushing Reamer, for 3/16" (4.74 mm) governor crank.

To Adjust before Running, Vertical Crankshaft Models

Loosen screw holding governor lever to governor shaft. Place throttle in high speed position. While holding throttle in this position and with a screwdriver, turn governor shaft **CLOCKWISE** as far as it will go. Tighten screw holding governor lever to governor shaft to 35-45 in. lbs. torque, Fig. 346.

Before starting engine, manually move governor linkage to check for any binding.

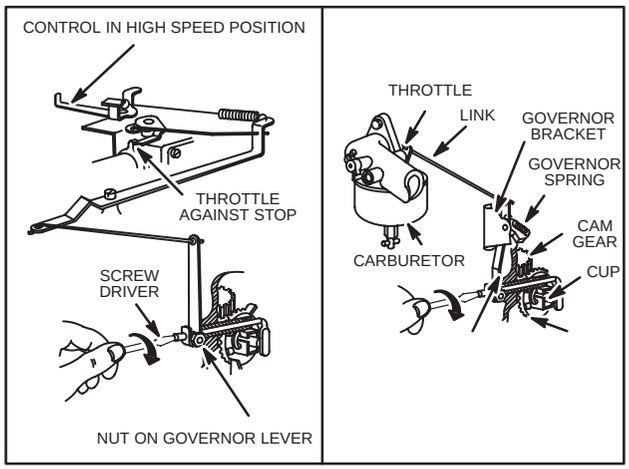

Fig. 346 – ADJUST GOVERNOR

AIR CLEANERS, CARBURETORS & GOVERNORS, (cont'd)

To Adjust TOP-NO-LOAD RPM – Aluminum Vertical Crankshaft Model Series 100900, 130900, 131900, 140000, 170000, 190000, 220000, 250000

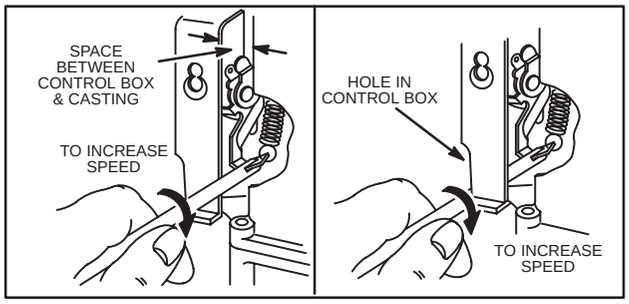

Fig. 347 – ADJUSTING TOP-NO-LOAD RPM

To Adjust before Running, Horizontal Crankshaft Models

Loosen screw holding governor lever to governor shaft. Place throttle in high speed position. While holding throttle in this position and with a screwdriver, turn governor shaft **CLOCKWISE** as far as it will go. Tighten screw holding governor lever to governor shaft to 35-45 in. lbs. torque, Fig. 348.

Before starting engine, manually move governor linkage to check for any binding.

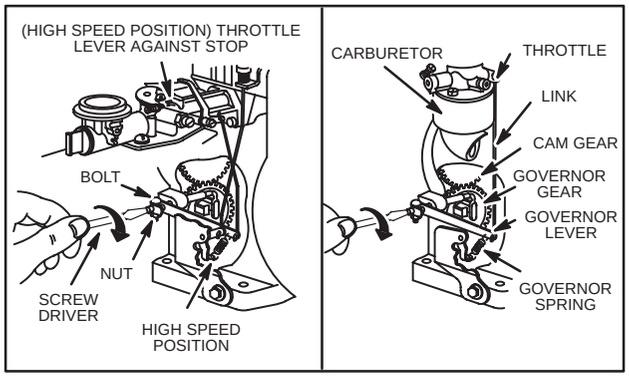

Fig. 348 – ADJUST GOVERNOR

To Adjust TOP-NO-LOAD RPM – Aluminum Horizontal Crankshaft Model Series 100200, 130200, 140000, 170000, 190000, 220000, 250000

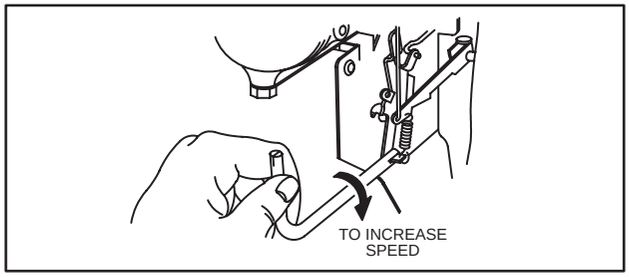

Fig. 349 – ADJUSTING TOP-NO-LOAD RPM

1. Set control lever to maximum speed position, with engine running.

2. Use Tool #19229, tang bending tool, to bend spring anchor tang to obtain the proper top-no-load RPM, Fig. 349. If Tool #19229 is not available, make tool, Fig. 350.

NOTE: For correct top-no-load RPM by model and type, see Engine Sales Manual, MS-4052 or MS-6225, Service Engine Sales Manual microfiche under note column, or MAXIMUM RPM TABLE at end of each manual for the engine model.

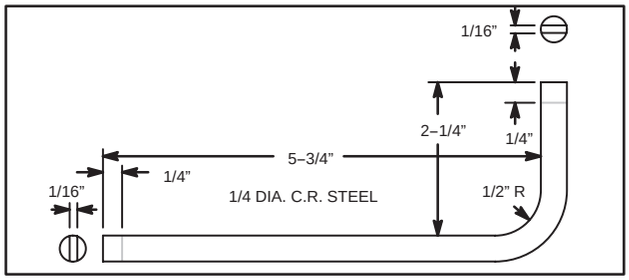

Fig. 350 – TANG BENDING TOOL

AIR CLEANERS, CARBURETORS & GOVERNORS, (cont'd)

Generator Applications Only

Governor regulation to within two cycles of either 60 or 50 cycles can be obtained if the procedures indicated below are followed:

1. Push speed adjusting nut in and up to release spring tension on nut.

2. Start engine and pull out on speed adjusting nut to maximum length of travel, Fig. 351.

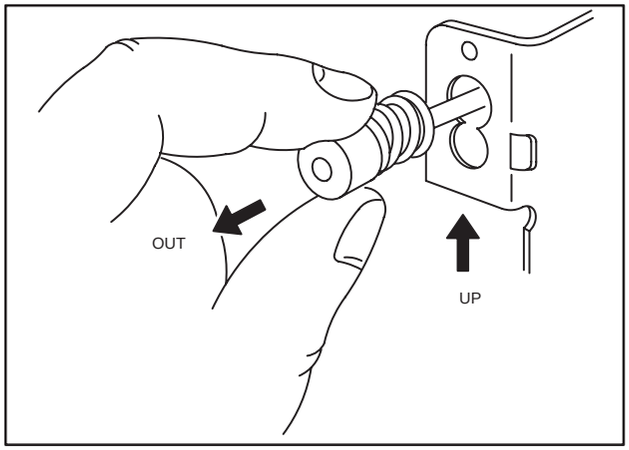

Fig. 351 – SPEED ADJUSTING NUT

3. Set engine speed per Table No. 13, Page 72 by bending governor tang, Fig. 352.

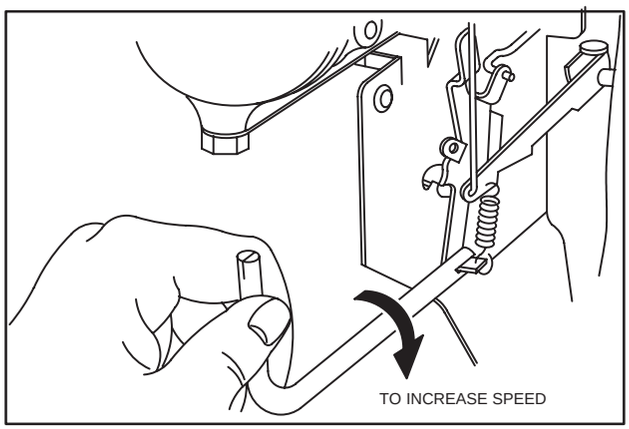

Fig. 352 – ADJUSTING TOP-NO-LOAD RPM

4. With engine still running, return speed adjusting nut to slot, push in to compress spring and push nut down into slot.

5. Then turn speed adjusting nut to obtain:

1600 RPM Top-No-Load for 1500 RPM 50 cycle generator

1875 RPM Top-No-Load for 1800 RPM 60 cycle generator

3150 RPM Top-No-Load for 3000 RPM 50 cycle generator

3750 RPM Top-No-Load for 3600 RPM 60 Cycle Generator

Table No. 13

ALUMINUM MODEL SERIES 80000, 112200, 130000, 170000, 190000, 220000, 250000

Model Series	Governor Type	Governor Pre-Set RPM	Notes
80000	Mechanical	4600	Without Flat Cartridge Air Cleaner
112200	Mechanical	4300	Type Numbers below 0500
130200, 131200	Mechanical	4600	
131400	Mechanical	4200	60 Cycle, 3600 RPM
170000 & 190000	Mechanical	4250	50 & 60 Cycle, 3000 & 3600 RPM, with Standard Air Cleaner
170000 & 190000	Mechanical	2400	60 Cycle, 1800 RPM
220000 & 250000	Mechanical	4200	50 & 60 Cycle, 3000 & 3600 RPM
220000 & 250000	Mechanical	2400	60 Cycle, 1800 RPM

AIR CLEANERS, CARBURETORS & GOVERNORS, (cont'd)

REMOTE GOVERNOR AND THROTTLE CONTROLS

The various remote controls for each model are shown in Fig's. 358 to 397 and should be assembled as shown. In general, there are two types of remote controls. (1) Governor Control and (2) Throttle Control.

Remote Governor Control

This control regulates the engine speed by changing the governor spring tension, thus allowing the governor to control the carburetor throttle at all times and maintain any desired speed, Fig. 353.

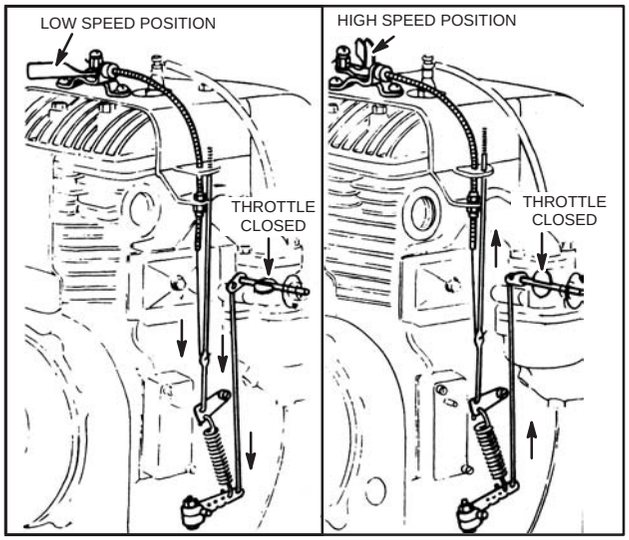

Fig. 353 – REMOTE GOVERNOR CONTROL

Adjust Remote Governor Control

Start engine, loosen screw in swivel on control lever. Move control lever to high speed position, Fig. 353. Pull control wire through control casing and swivel on control lever until the maximum speed is obtained. Retighten control wire screw, bend loose end of wire around swivel and cut off excess wire.

Remote Throttle Control

This connected to the governor lever and operates the carburetor throttle until the full governed speed is obtained and at which point the governor takes over control of the throttle. At any point below the governed speed, the throttle will be held in fixed position and the engine speed will vary with the load, Fig. 354.

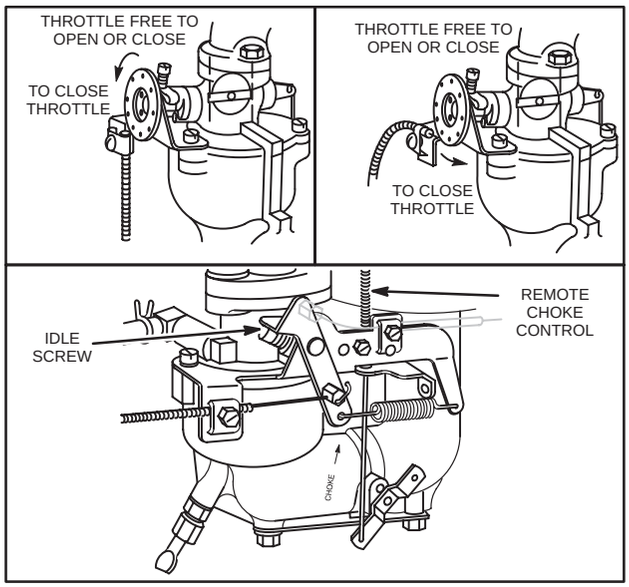

Fig. 354 – REMOTE THROTTLE CONTROL

Adjust Remote Throttle Control

Move the control lever to the low speed position, Fig. 354. Loosen the control wire screw and pull wire through the casing and swivel until the carburetor throttle is closed. retighten control wire screw. Check by moving control lever to high speed position. The carburetor throttle should now be free to open or close completely.

CHOKE-A-MATIC® – REMOTE CONTROL

On Choke-A-Matic® carburetors, the remote control must be correctly adjusted in order to obtain proper operation of the choke and stop switch.

NOTE: REMOTE CONTROL SYSTEM MUST BE MOUNTED ON POWERED EQUIPMENT IN NORMAL OPERATING POSITION BEFORE ADJUSTMENTS ARE MADE.

AIR CLEANERS, CARBURETORS & GOVERNORS, (cont'd)

To Adjust

Fig. 355 illustrates typical remote control installations used with Choke-A-Matic® carburetors.

1. To adjust, move remote control lever to "FAST" position. Choke actuating lever "A" should just contact choke shaft "B" or link "B" as shown in Fig. 355.

2. If not, loosen screw "C" slightly and move casing and wire "D" in or out to obtain this condition.

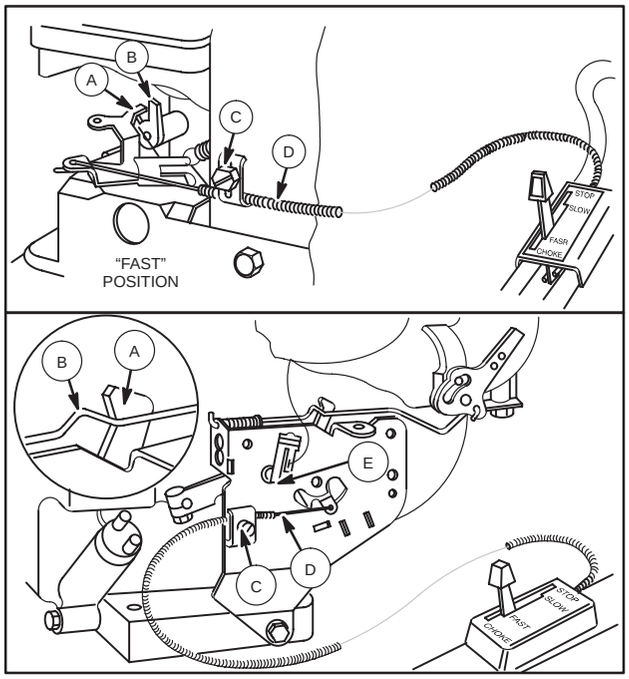

Fig. 355 – CHOKE-A-MATIC® CONTROL, TYPICAL

3. Check operation by moving remote control lever to "START" or "CHOKE" position.

4. Choke valve should be completely closed, Fig. 356, Ill. 1.

5. Then move remote control lever to "STOP" position. Control must contact stop switch blade, Fig. 356, Ill. 2 or "E," Fig. 355.

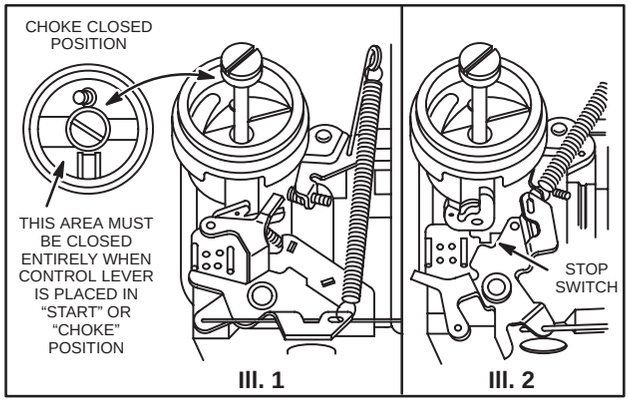

Fig. 356 – CHOKE AND STOP POSITION

DIAL CONTROL ADJUSTMENTS

Dial controls seldom require adjustment unless blower housing has been removed.

1. To adjust: Place dial control knob in "START" position.

2. Loosen control wire screw "A" – move lever "C" to full choke position. Allow a 1/8" (3.18 mm) gap between lever and bracket as shown, Fig. 357.

3. While holding lever, tighten screw "A."

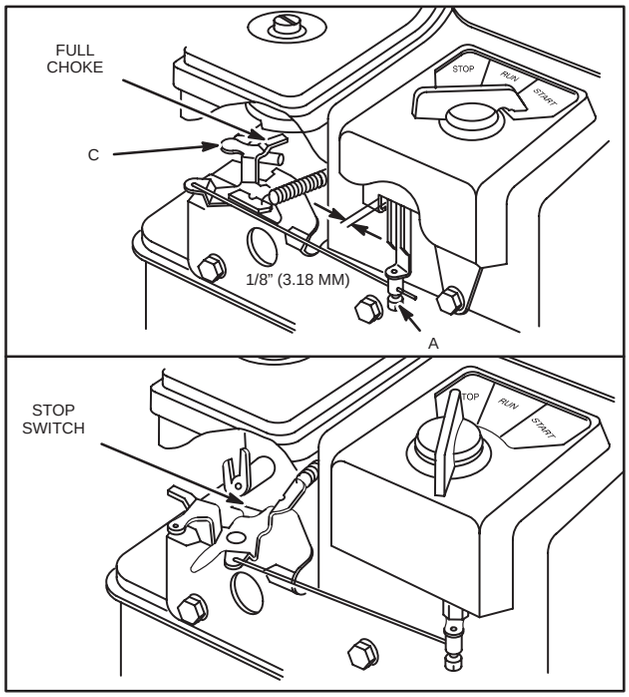

Fig. 357 – CHOKE-A-MATIC® DIAL CONTROL ADJUSTMENTS

AIR CLEANERS, CARBURETORS & GOVERNORS, (cont'd)

CARBURETOR AND GOVERNOR CONTROLS

Fig's. 358 to 397 show governor linkage and remote control hook-up for the various engine models.

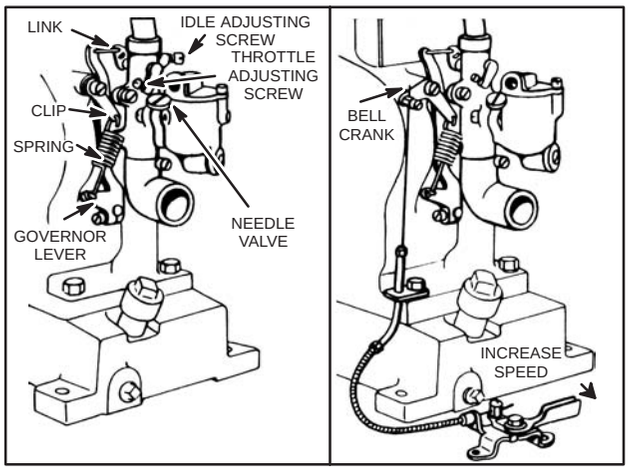

Fig. 358 – MODELS A, FJ, M. T 5 DIGIT TYPE #'S

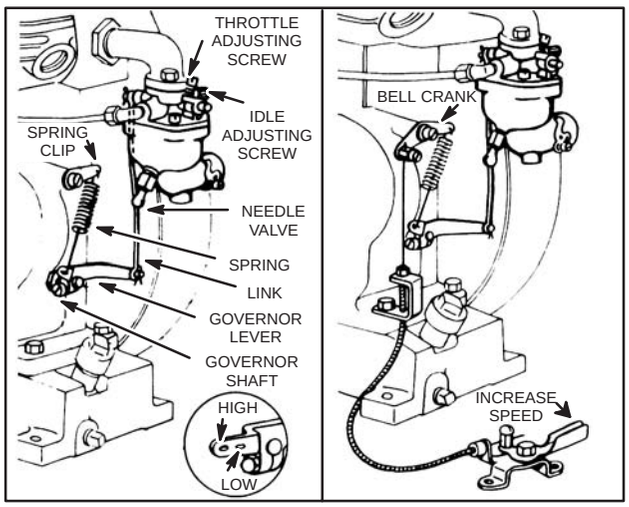

Fig. 359 – MODEL A 6 DIGIT

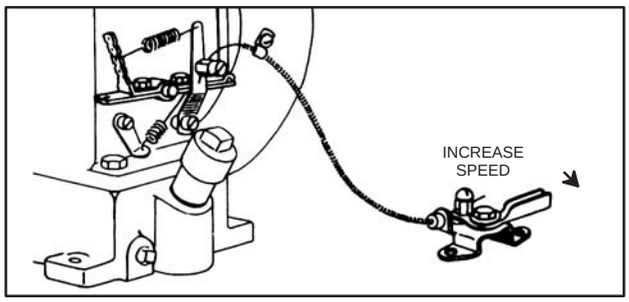

Fig. 360 – MODELS B, ZZ REMOTE GOV. CONTROL

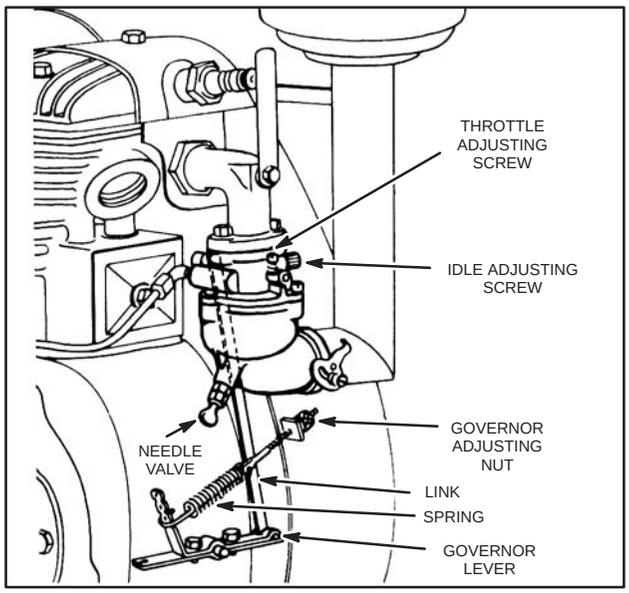

Fig. 361 – MODELS B, K, Z, ZZ

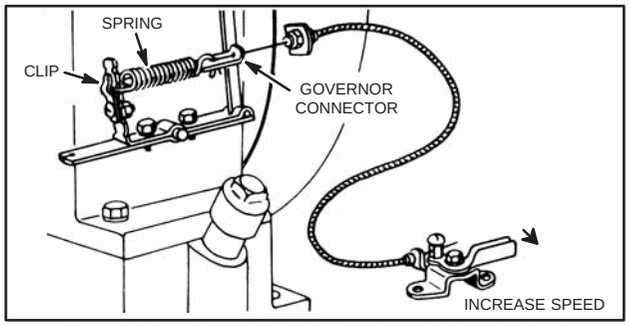

Fig. 362 – MODELS B, ZZ REMOTE GOV. CONTROL

AIR CLEANERS, CARBURETORS & GOVERNORS, (cont'd)

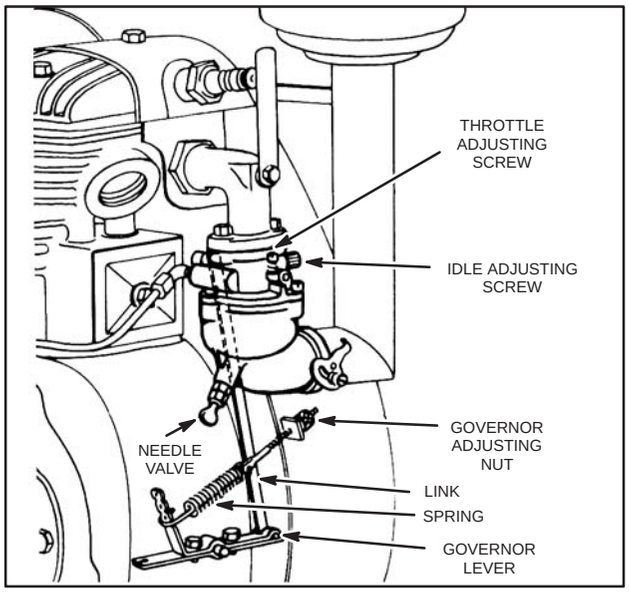

Fig. 363 – MODELS B, K, Z, ZZ

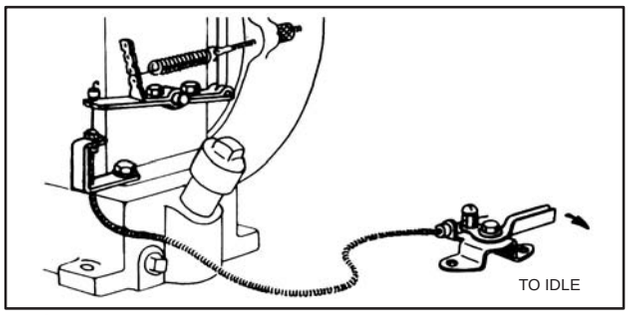

Fig. 364 – MODELS B, ZZ REMOTE THROTTLE CONTROL

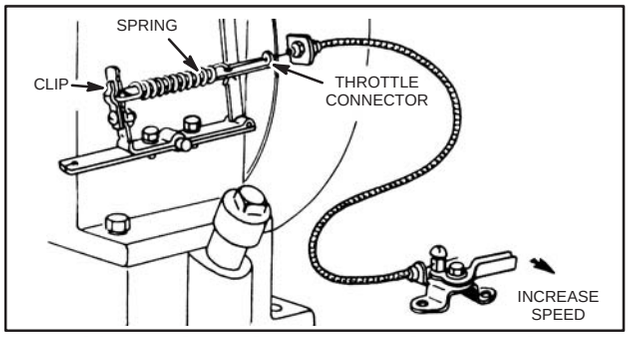

Fig. 365 – MODELS B, ZZ REMOTE THROTTLE CONTROL

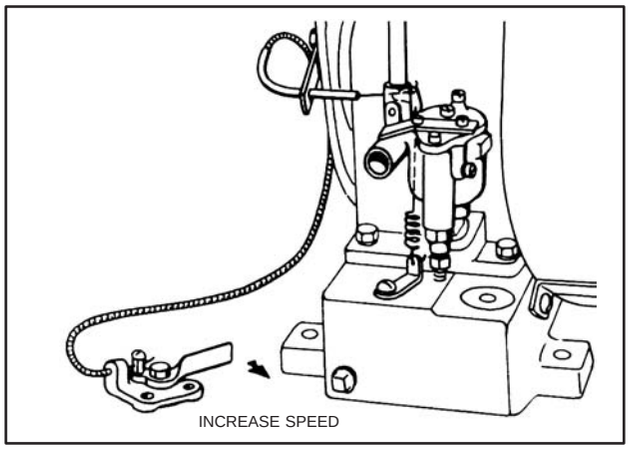

Fig. 366 – MODEL FHI

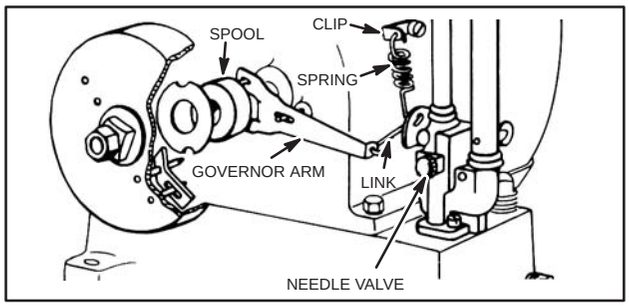

Fig. 367 – MODEL FH

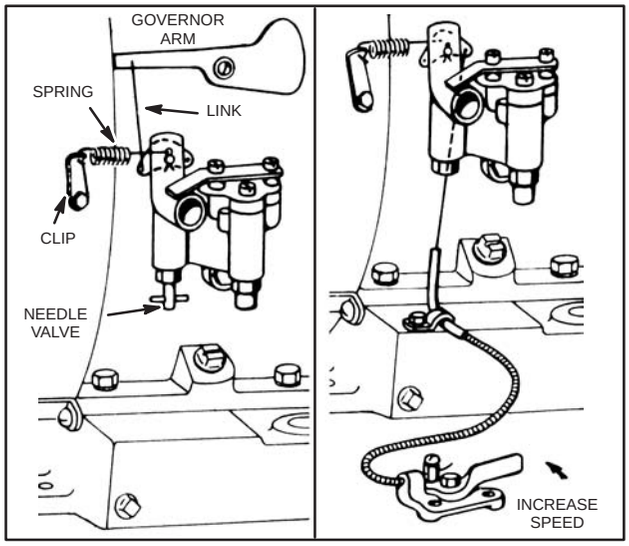

Fig. 368 – MODEL FI

AIR CLEANERS, CARBURETORS & GOVERNORS, (cont'd)

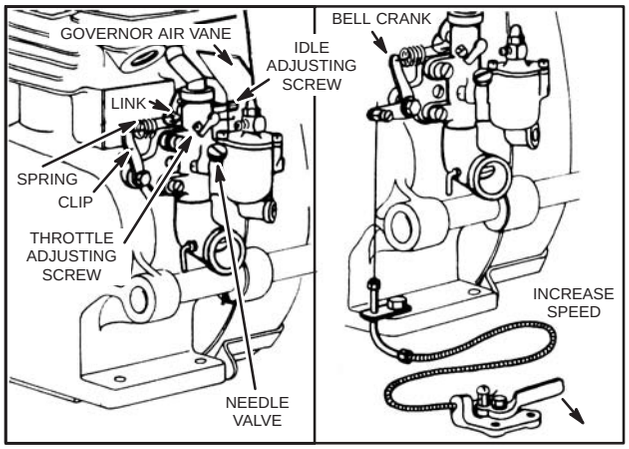

Fig. 369 – MODEL H

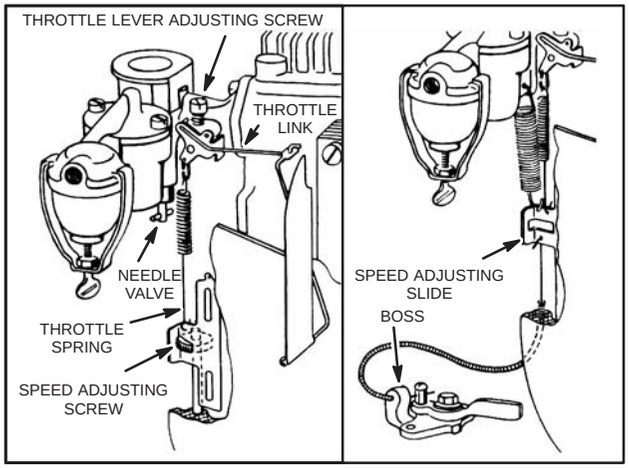

Fig. 370 – MODELS I, IBP 5 DIGIT TYPE #'S

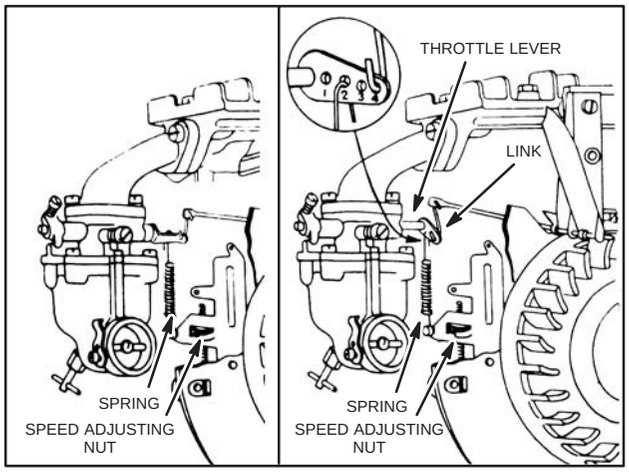

Fig. 371 – MODELS I, 5 6 DIGIT TYPE #'S

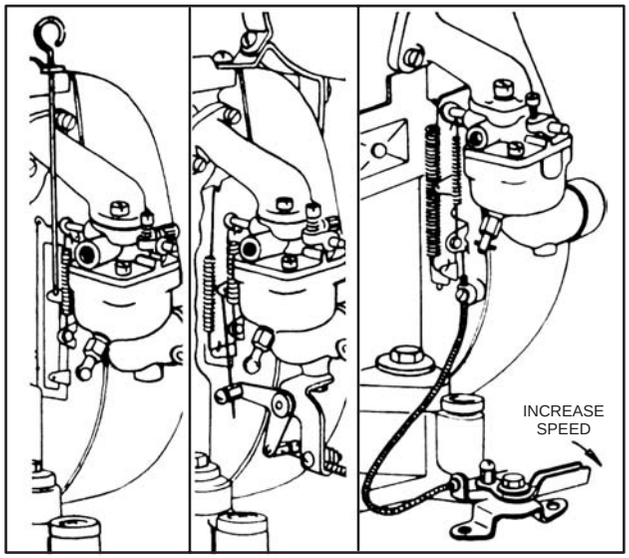

Fig. 372 – MODELS I, N REMOTE GOV. CONTROL

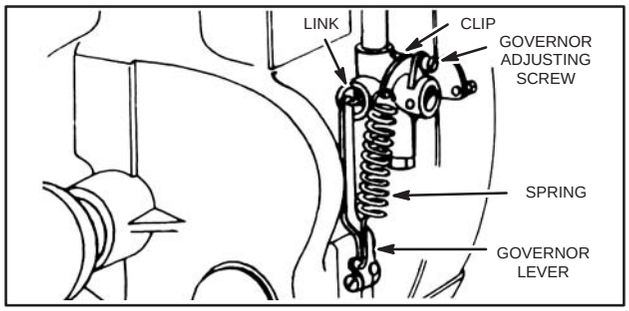

Fig. 373 – MODEL L

AIR CLEANERS, CARBURETORS & GOVERNORS, (cont'd)

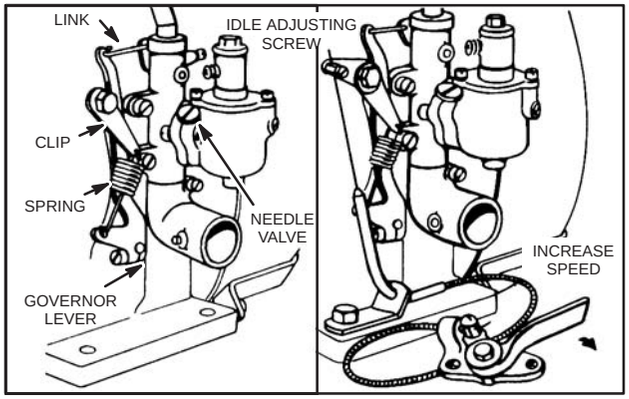

Fig. 374 – MODELS M, T

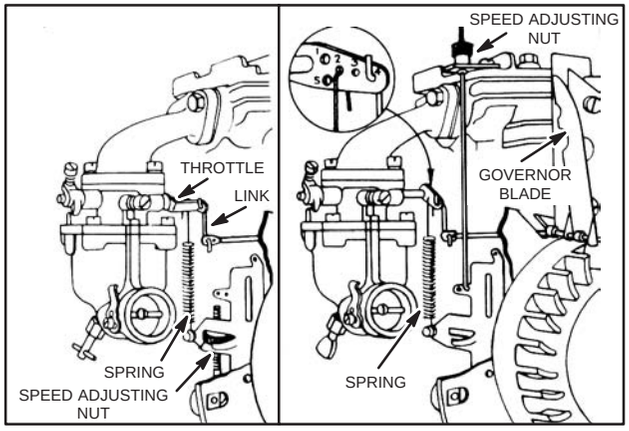

Fig. 375 – MODELS N, 8 OLD AND NEW MODELS

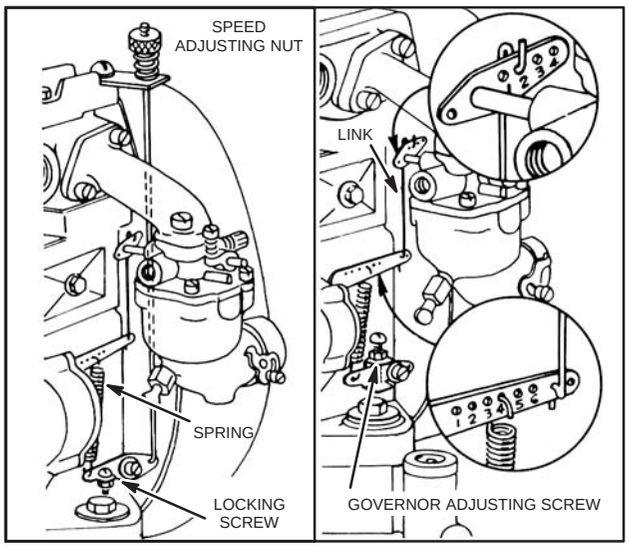

Fig. 376 – MODELS I, N, 5, 8 MECH. GOVERNOR

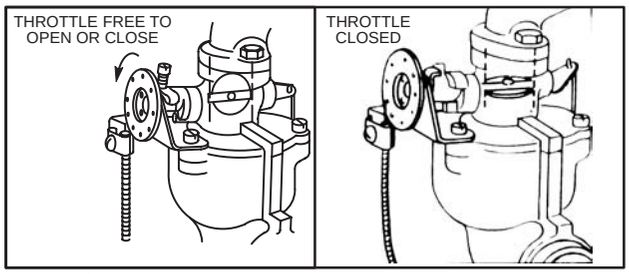

Fig. 377 – MODELS I, N, 5, 6, 8 REMOTE THROTTLE CONTROL

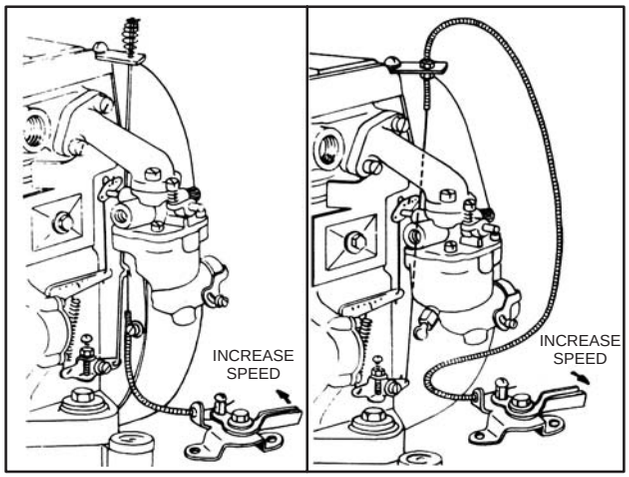

*Fig. 378 – MODELS I, N, * REMOTE MECH. GOV. CONTROL*

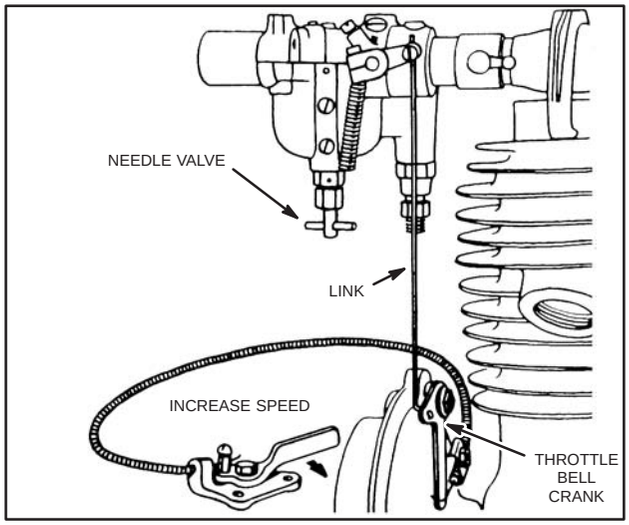

Fig. 379 – MODEL PB

AIR CLEANERS, CARBURETORS & GOVERNORS, (cont'd)

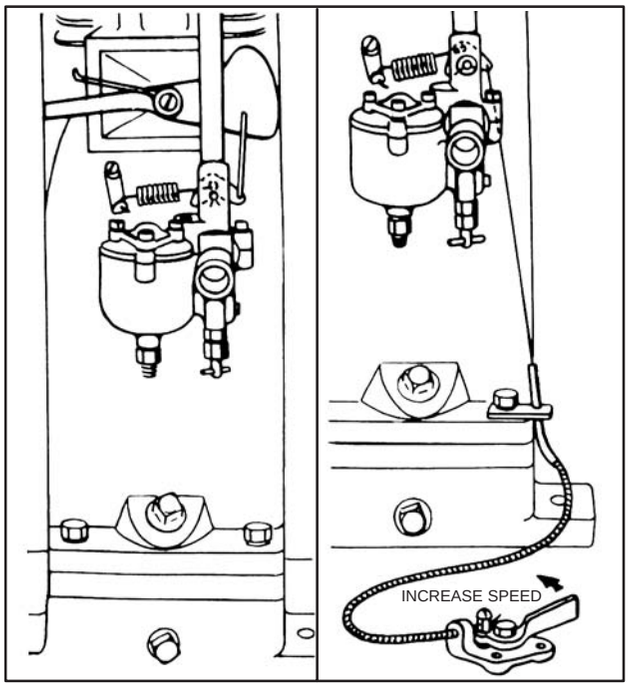

Fig. 380 – MODEL Q

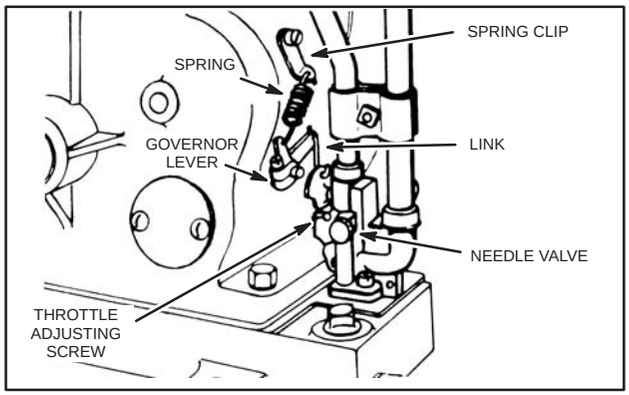

Fig. 382 – MODEL S

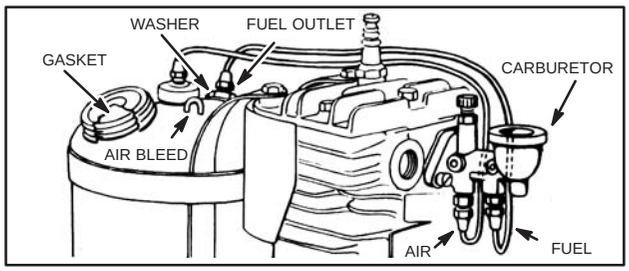

Fig. 383 – MODEL U

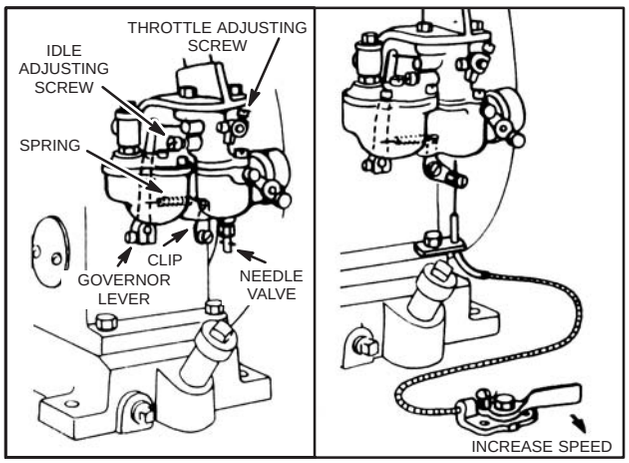

Fig. 381 – MODELS R, W

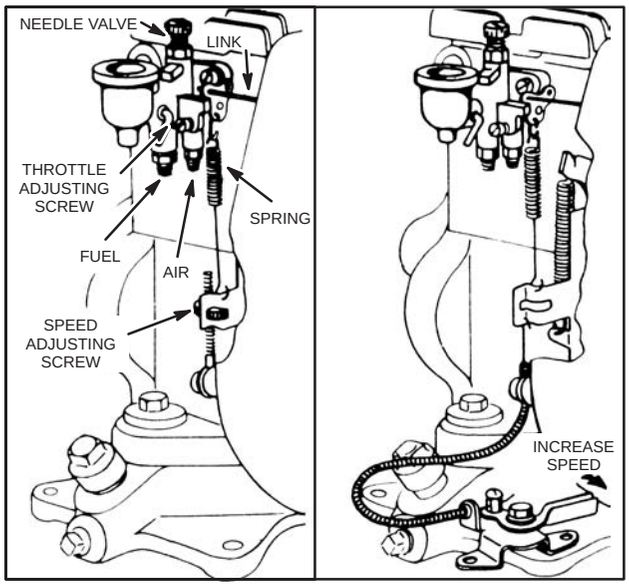

Fig. 384 – MODEL U REMOTE CONTROL

AIR CLEANERS, CARBURETORS & GOVERNORS, (cont'd)

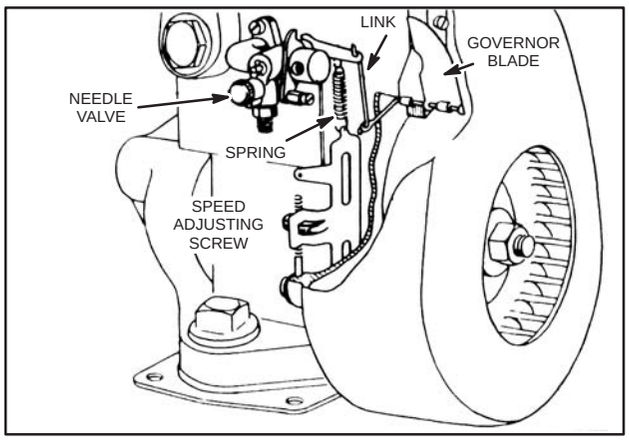

Fig. 385 – MODELS WBG, WMG, WMB, WI, WM, WMI

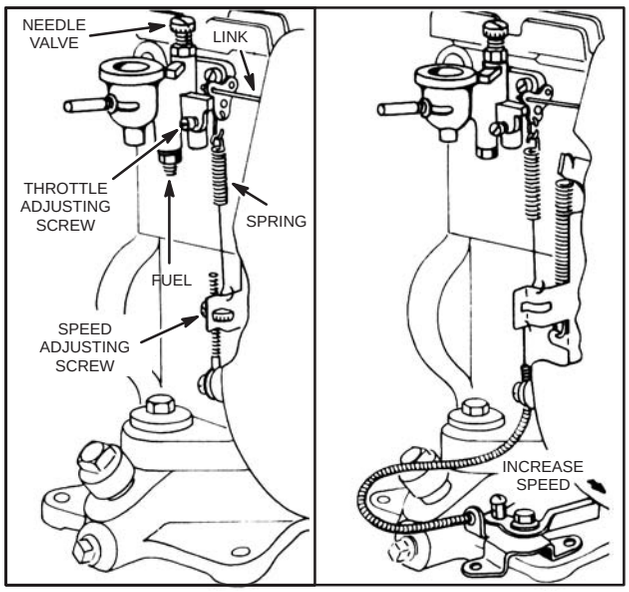

Fig. 387 – MODELS WI, NS

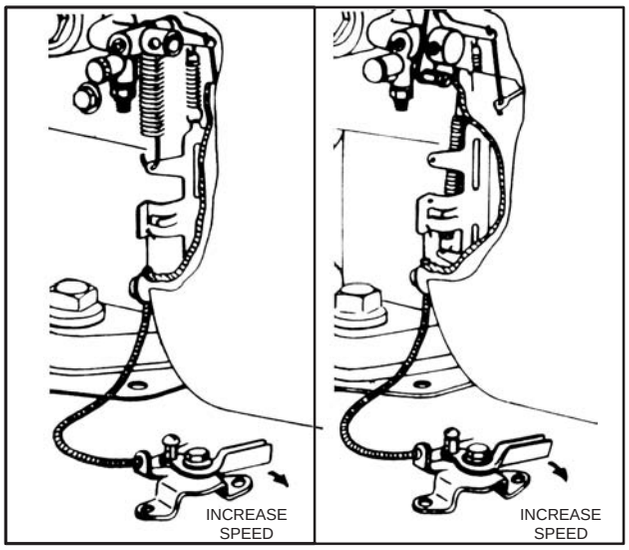

Fig. 386 – WBG, WMG, WMB, WI, WM, WMI REMOTE CONTROL

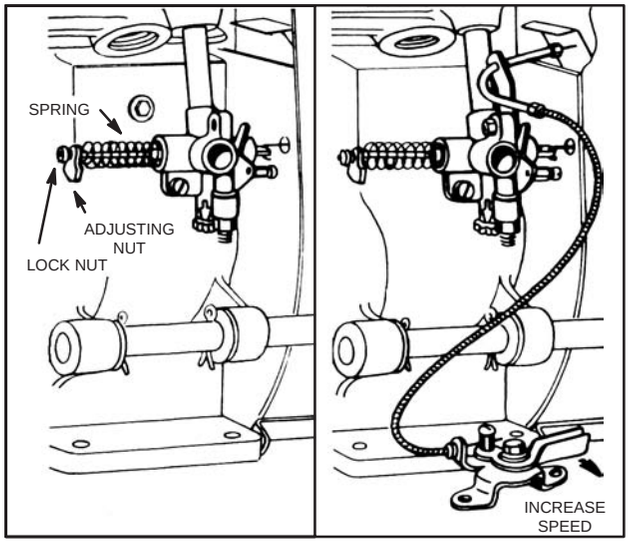

Fig. 388 – MODEL Y

AIR CLEANERS, CARBURETORS & GOVERNORS, (cont'd)

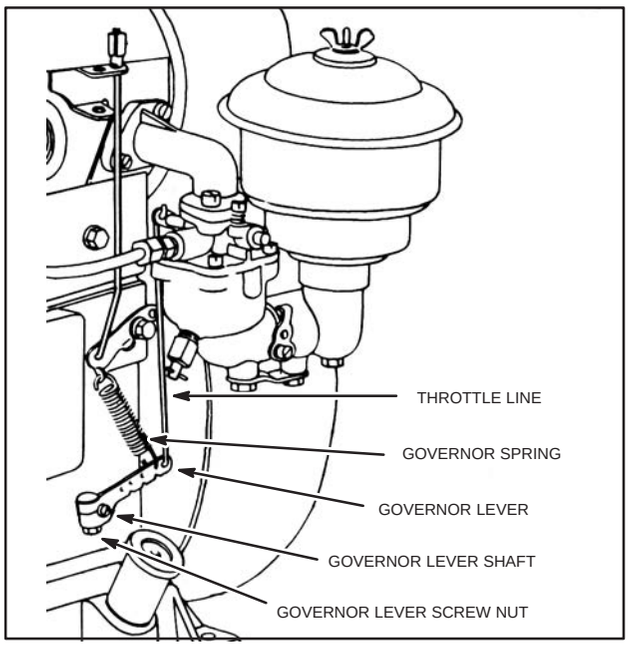

Fig. 389 – MODELS 9, 14, 23

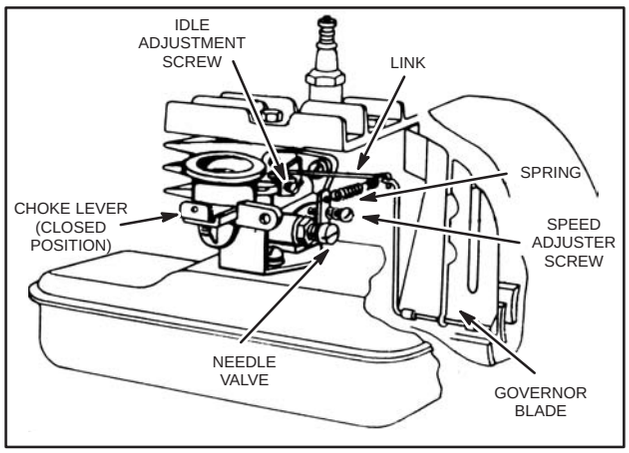

Fig. 391 – MODEL 5S, 6S

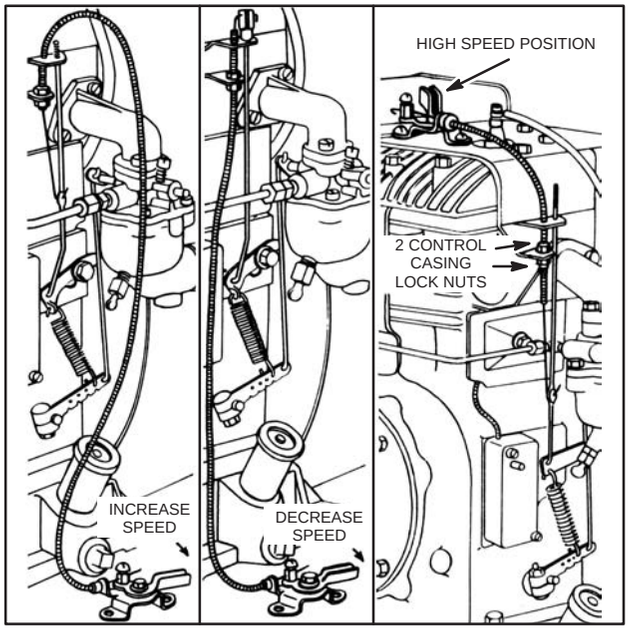

Fig. 390 – MODELS 9, 14, 23 REMOTE CONTROL

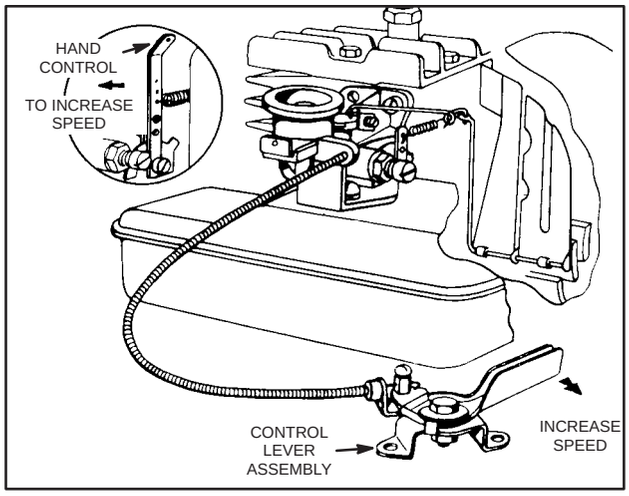

Fig. 392 – 5S, 6S REMOTE CONTROL

AIR CLEANERS, CARBURETORS & GOVERNORS, (cont'd)

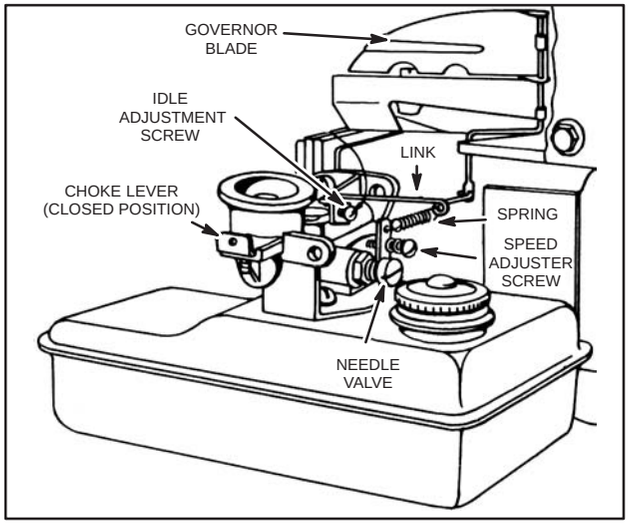

Fig. 393 – MODEL 6HS

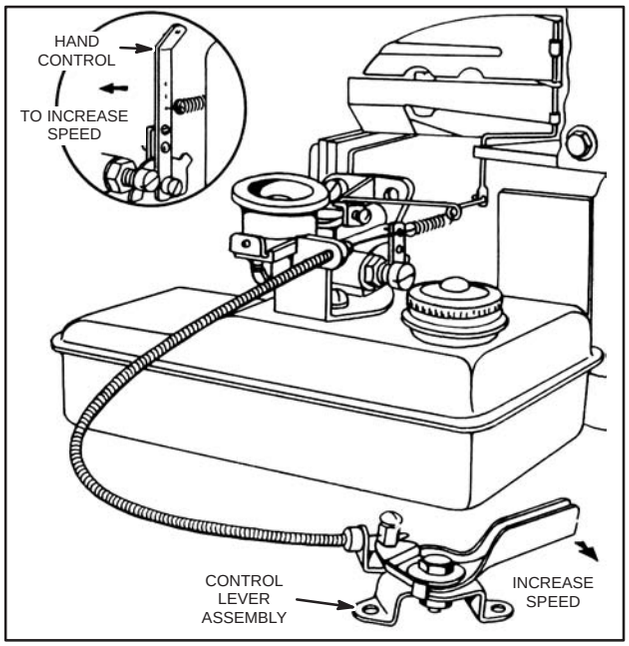

Fig. 394 – MODEL 6HS REMOTE CONTROL

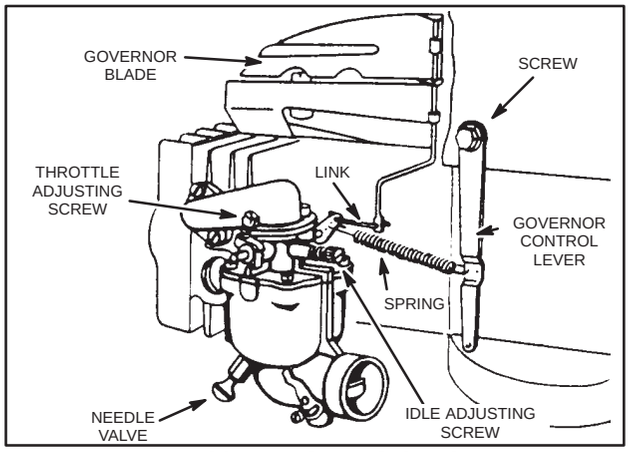

Fig. 395 – MODELS 6H, 8H

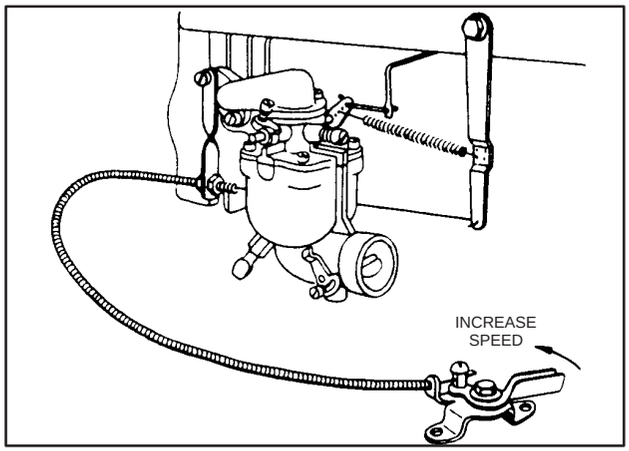

Fig. 396 – MODELS 6H, 8H REMOTE GOVERNOR CONTROL

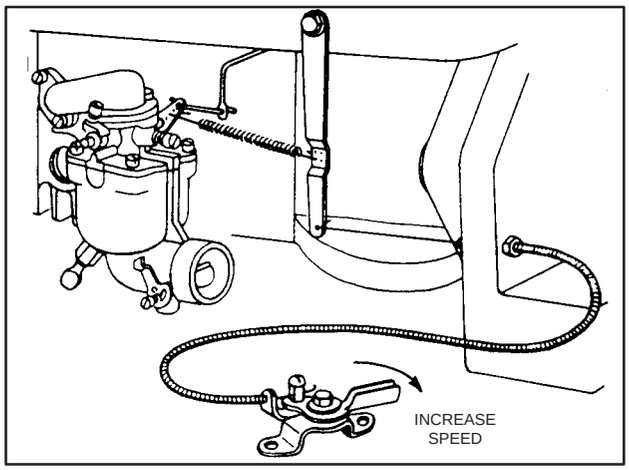

Fig. 397 – MODELS 6H, 8H REMOTE GOVERNOR CONTROL

AIR CLEANERS, CARBURETORS & GOVERNORS, (cont'd)

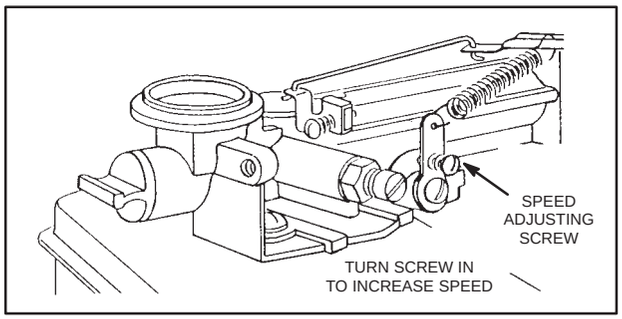

Fig. 398

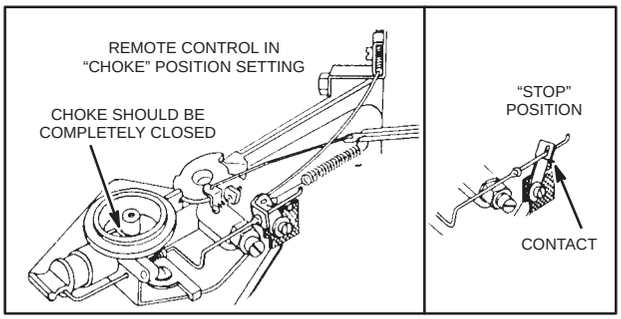

Fig. 399

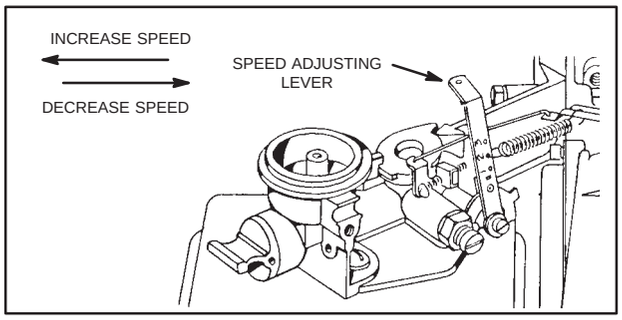

Fig. 400

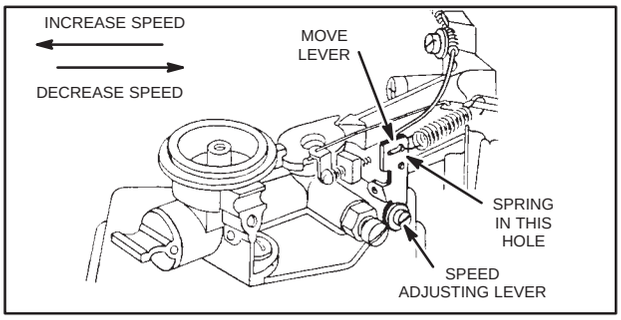

Fig. 401

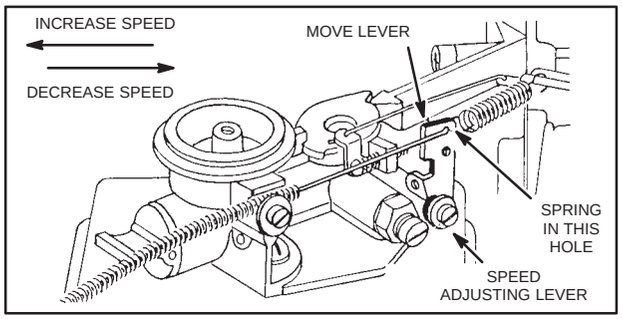

Fig. 402

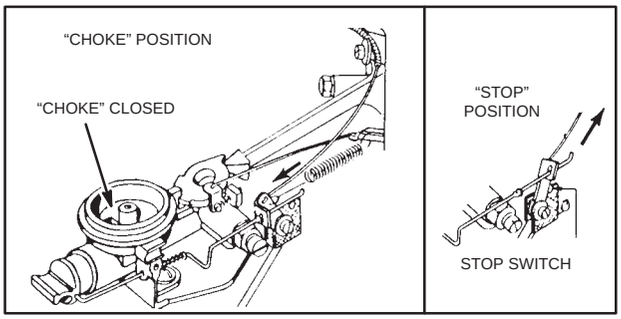

Fig. 403

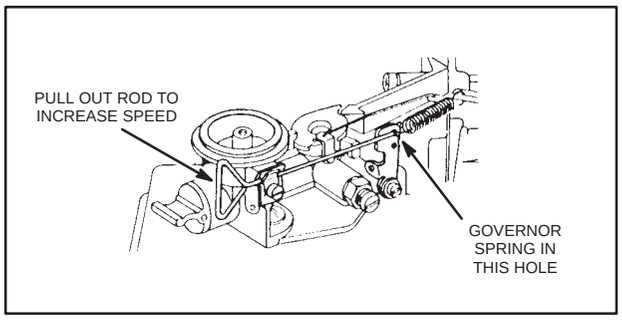

Fig. 404

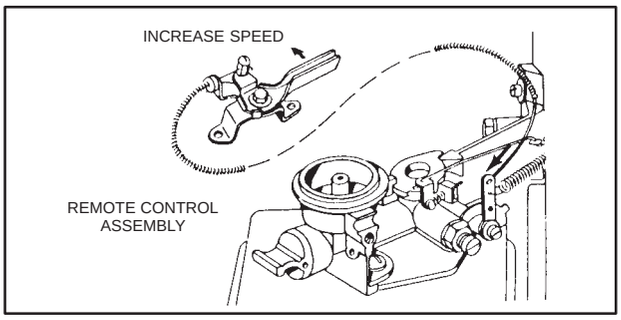

Fig. 405

MODELS 6BHS, 60500, 61500, 80500, 81500 VERTICAL CRANKSHAFT

AIR CLEANERS, CARBURETORS & GOVERNORS, (cont'd)

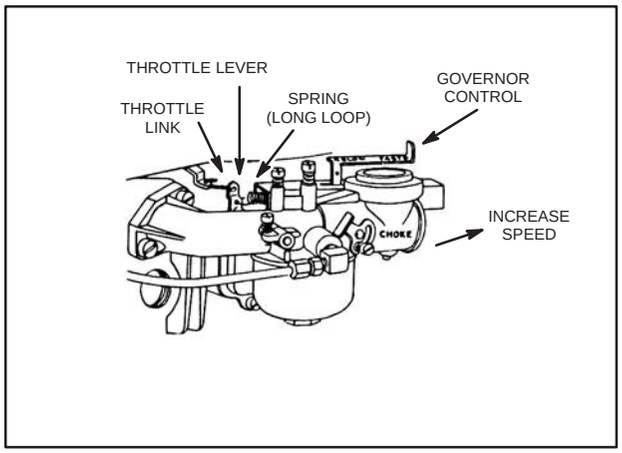

Fig. 406

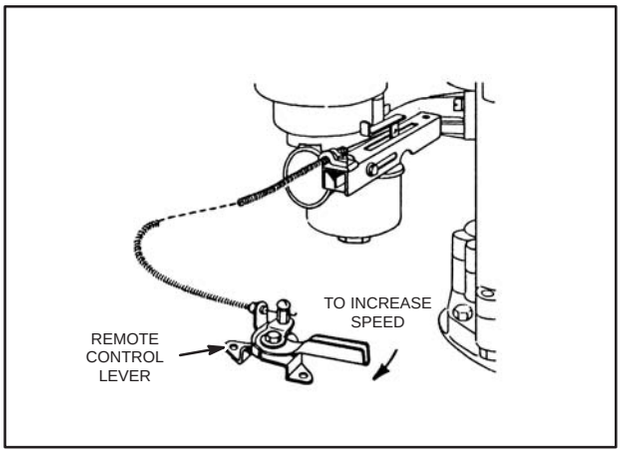

Fig. 407

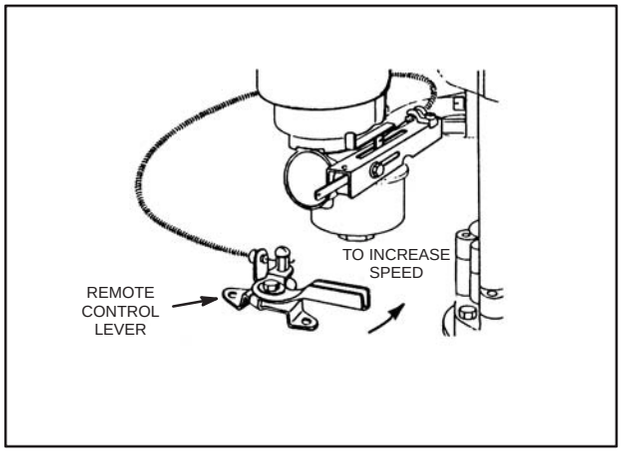

Fig. 408

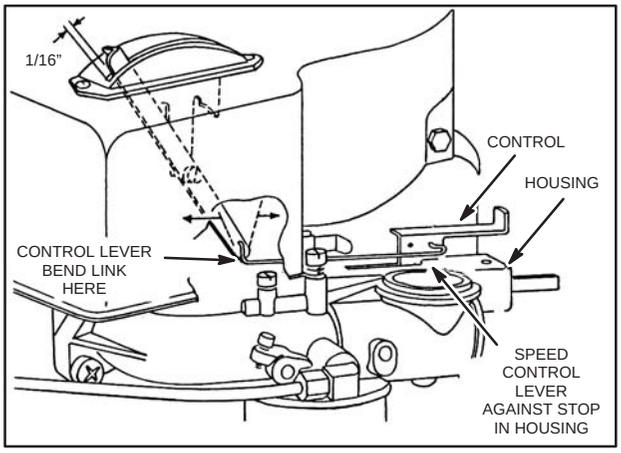

Fig. 409

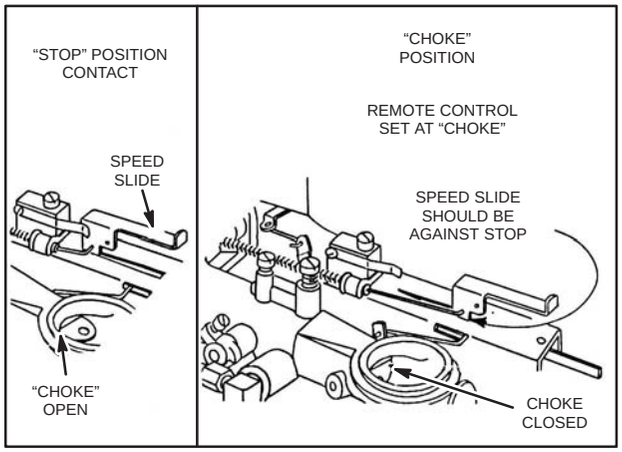

Fig. 410

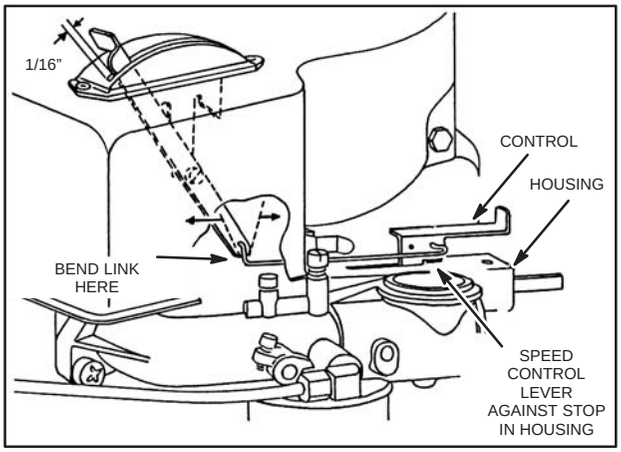

Fig. 411

MODELS 6B-H, 8B-HA, 60700, 61700, 80700, 81700 VERTICAL CRANKSHAFT

AIR CLEANERS, CARBURETORS & GOVERNORS, (cont'd)

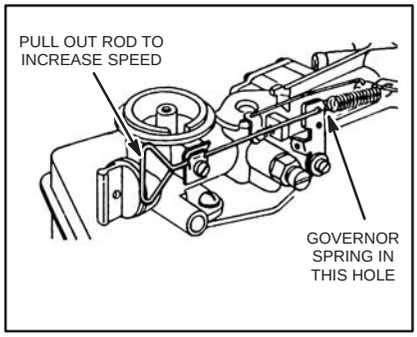

Fig. 412

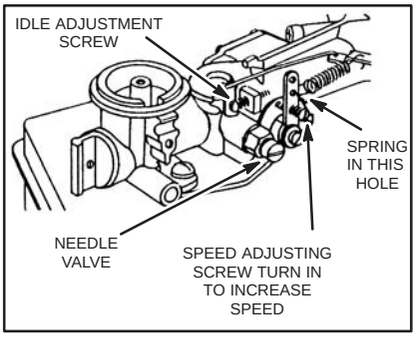

Fig. 413

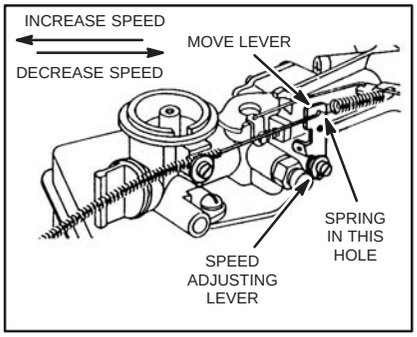

Fig. 414

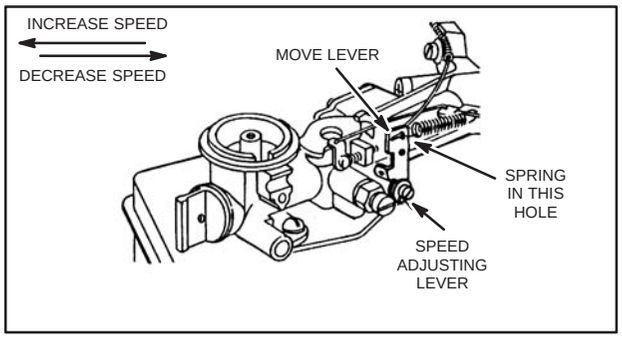

Fig. 415

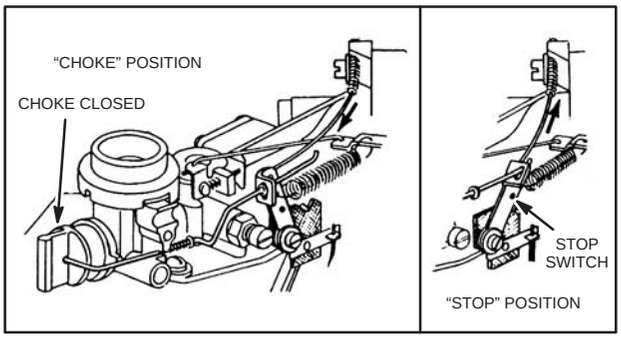

Fig. 416

MODELS 6BHS, 60500, 61500, 80500, 81500 VERTICAL CRANKSHAFT

AIR CLEANERS, CARBURETORS & GOVERNORS, (cont'd)

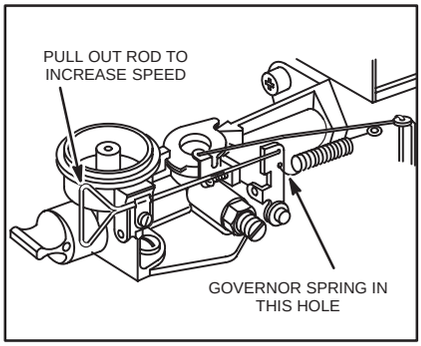

Fig. 417

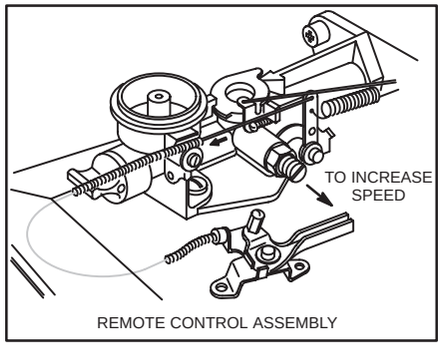

Fig. 418

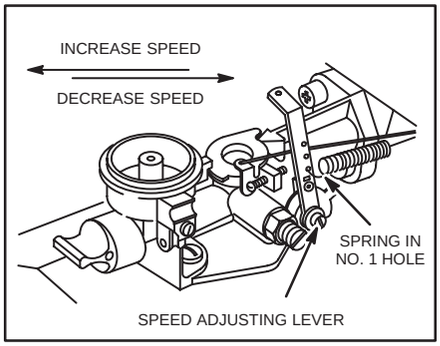

Fig. 419

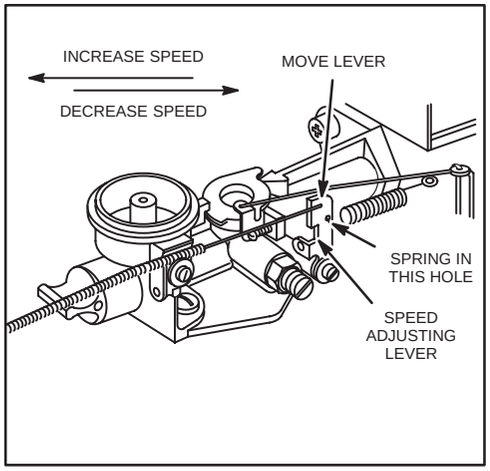

Fig. 420

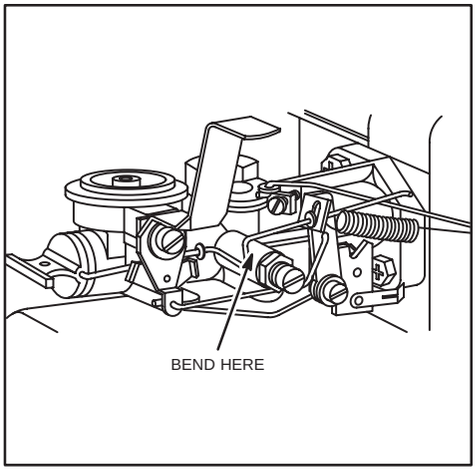

Fig. 421

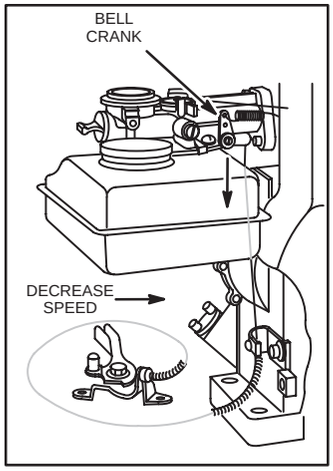

Fig. 422

Place lever in choke detent. If choke is not fully closed, bend link where show to attain full choke.

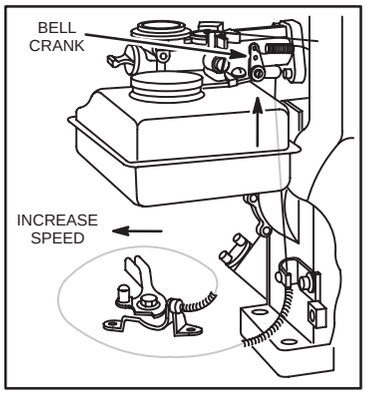

Fig. 423

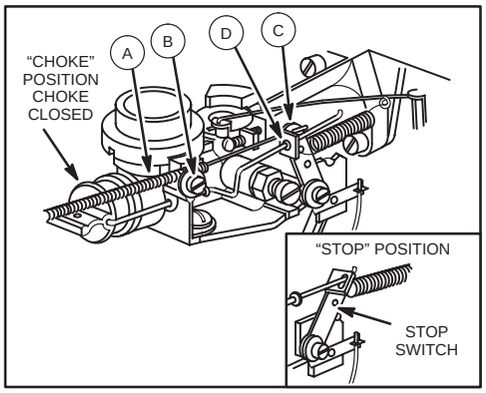

Fig. 424

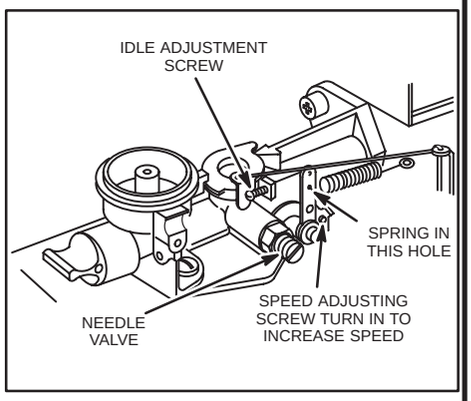

Fig. 425

MODELS 60100, 61100, 80100, 81100 HORIZONTAL CRANKSHAFT

AIR CLEANERS, CARBURETORS & GOVERNORS, (cont'd)

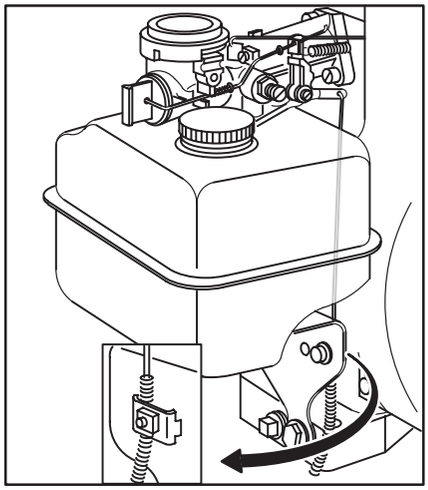

Fig. 426

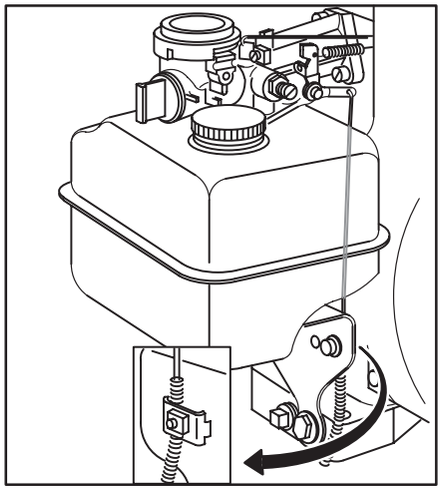

Fig. 427

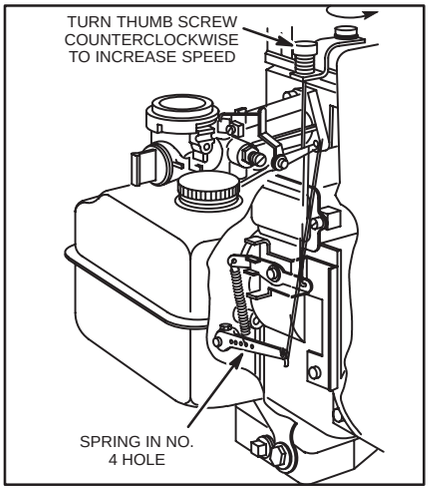

Fig. 428

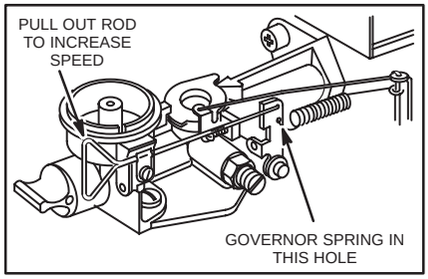

Fig. 429

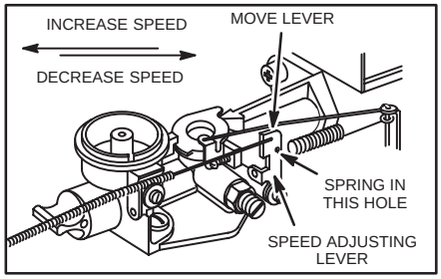

Fig. 430

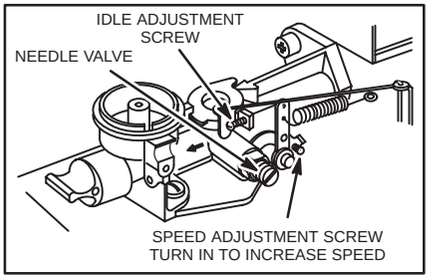

Fig. 431

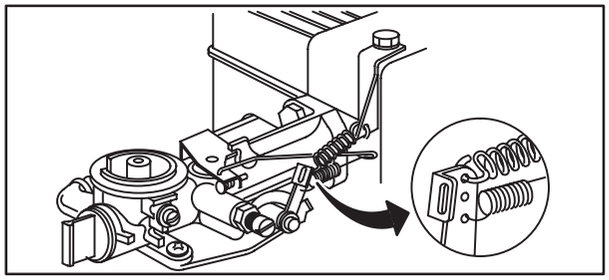

Fig. 432

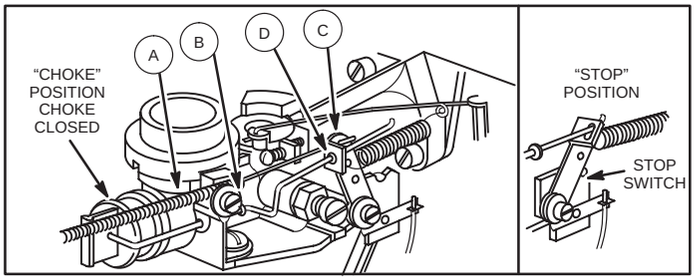

Fig. 433

MODELS 60200, 61200, 80200, 81200, 82200 HORIZONTAL CRANKSHAFT

AIR CLEANERS, CARBURETORS & GOVERNORS, (cont'd)

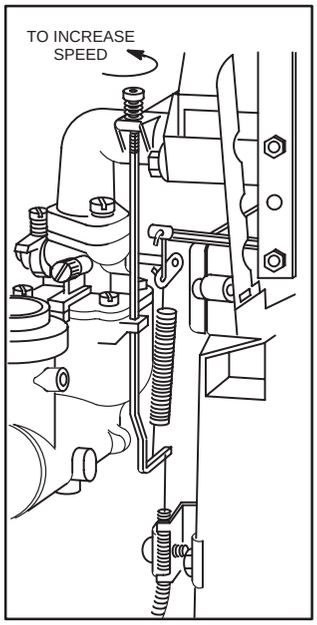

Fig. 434

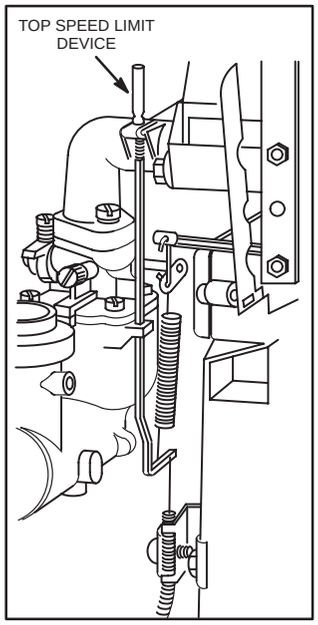

Fig. 435

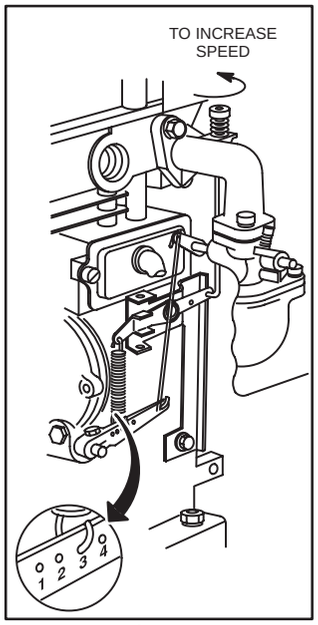

Fig. 436

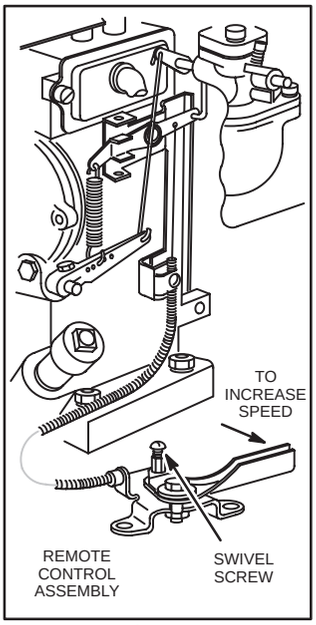

Fig. 437

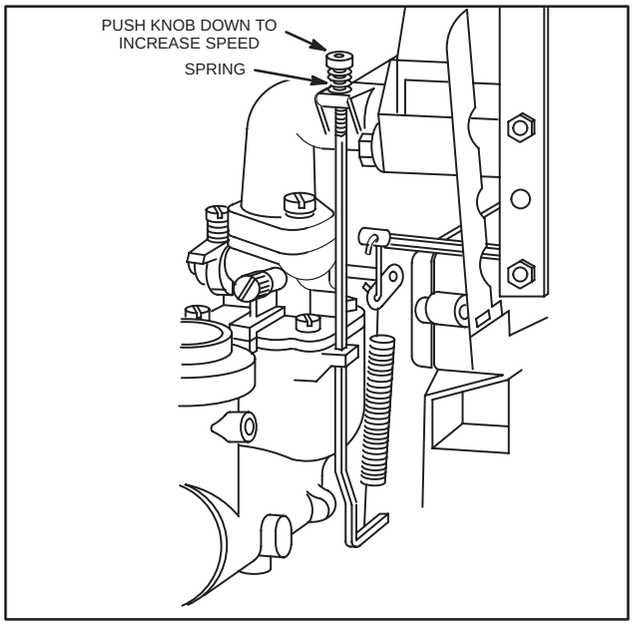

Fig. 438

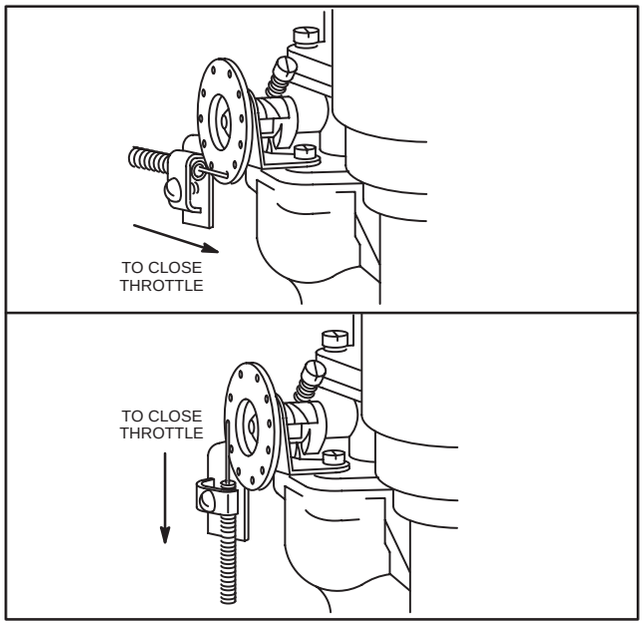

Fig. 439

MODELS 60300, 60400, 61300, 80300, 80400, 81400 HORIZONTAL CRANKSHAFT

AIR CLEANERS, CARBURETORS & GOVERNORS, (cont'd)

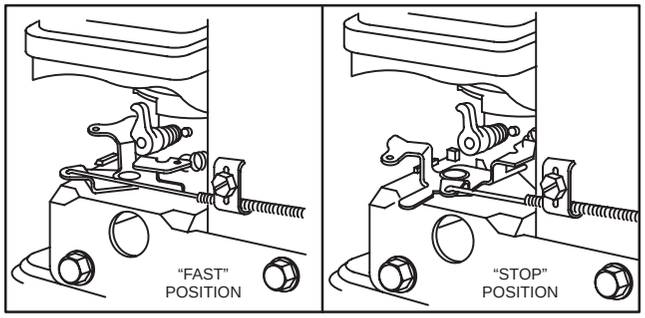

Fig. 440

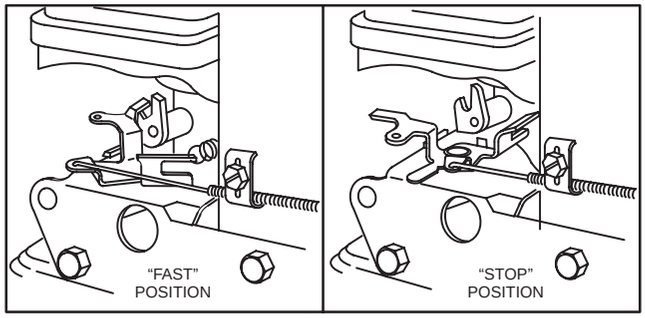

Fig. 441

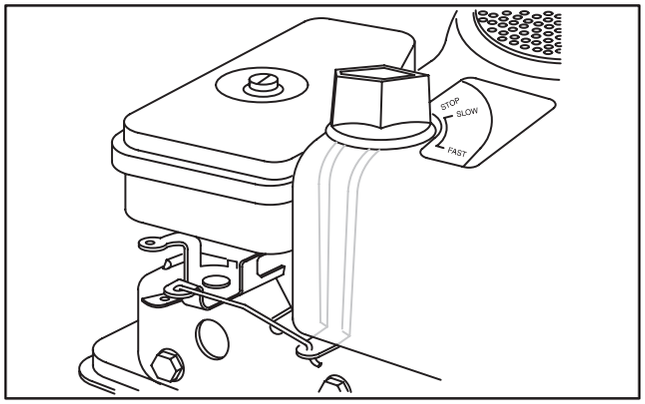

Fig. 442

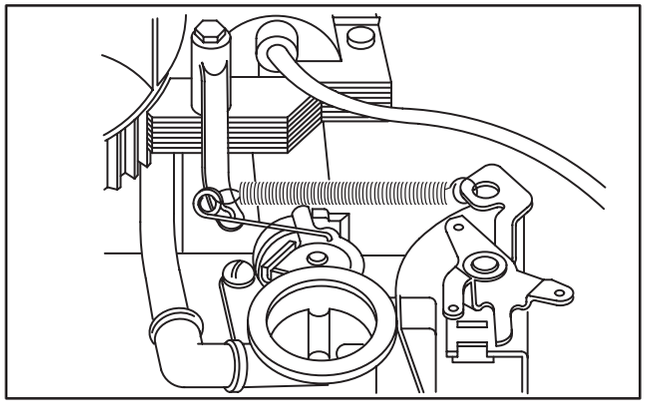

Fig. 443

MODEL 90000 VERTICAL CRANKSHAFT

AIR CLEANERS, CARBURETORS & GOVERNORS, (cont'd)

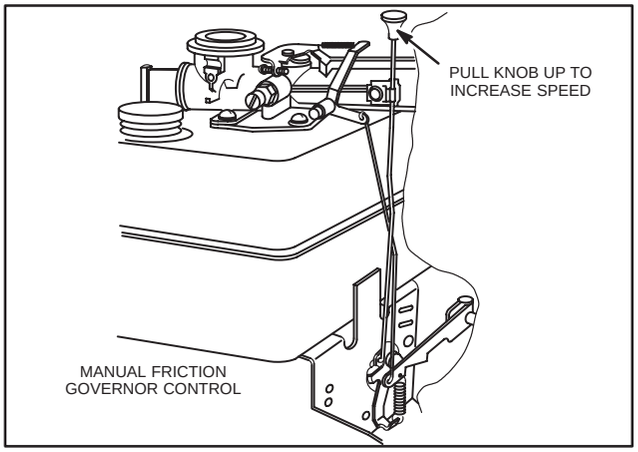

Fig. 444

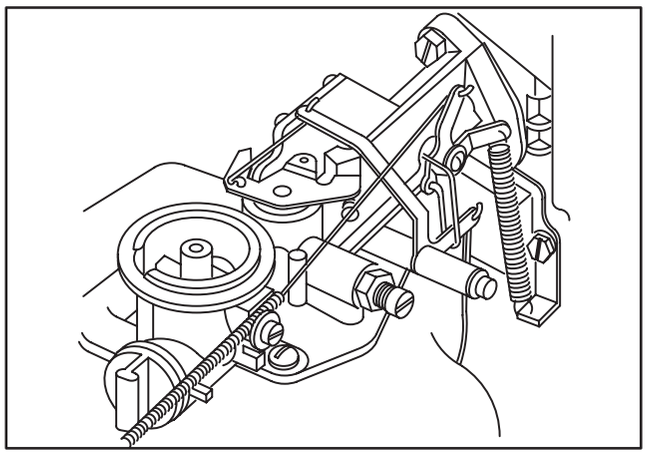

Fig. 445

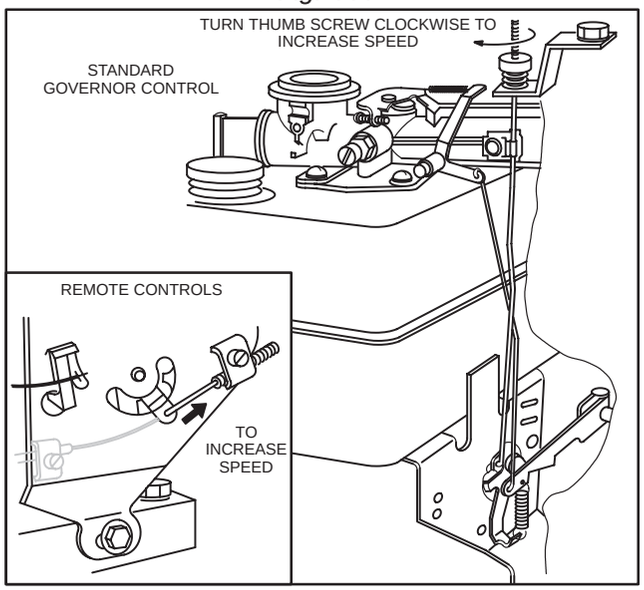

Fig. 446

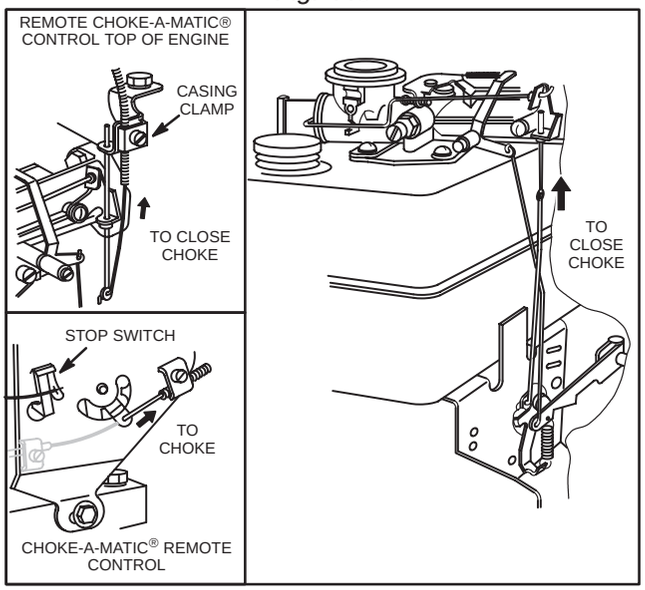

Fig. 447

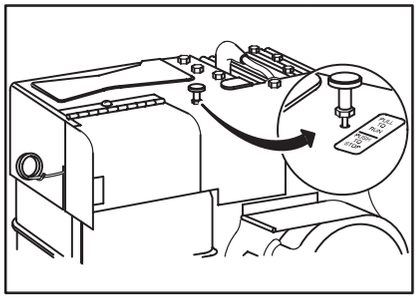

Fig. 448

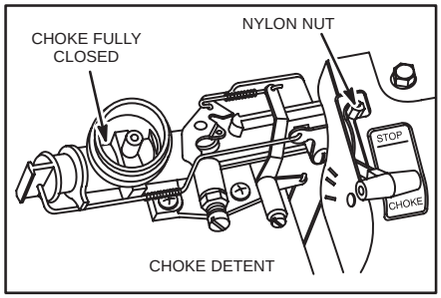

Fig. 449

Place lever in choke detent. If choke is not fully closed, adjust nylon nut (with socket wrench) until choke just closes.

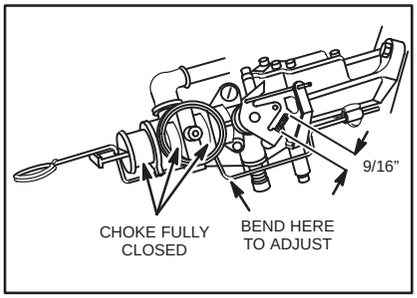

Fig. 450

Pull lever to choke position. The distance between throttle stamping and throttle screw stop must be 9/16" (14.27 mm). To adjust, bend lever where shown.

MODELS 100200, 130200 HORIZONTAL CRANKSHAFT

AIR CLEANERS, CARBURETORS & GOVERNORS, (cont'd)

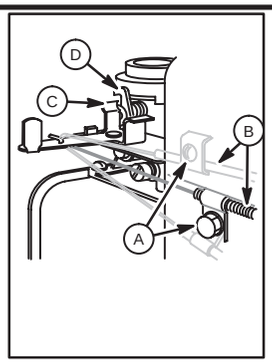

Fig. 451

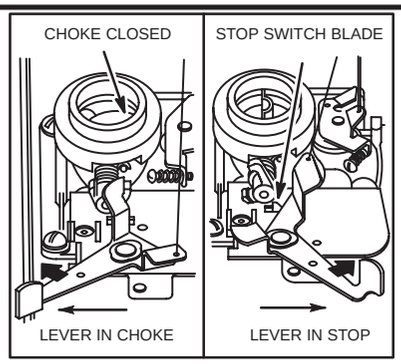

Fig. 452

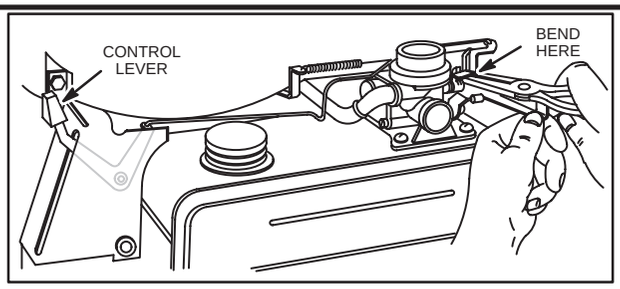

Fig. 453 – RIDER-TROL

Place control in choke detent; if choke does not fully close, bend as shown until choke is closed.

MODELS 100900, 130900 VERTICAL CRANKSHAFT

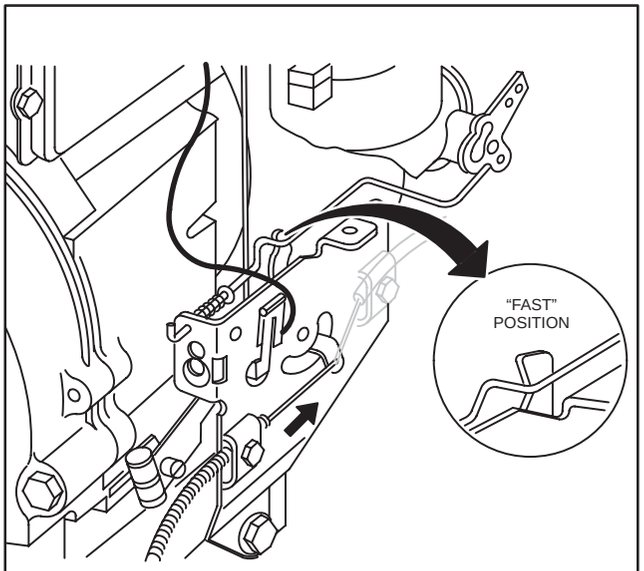

Choke-A-Matic®

Fig. 454

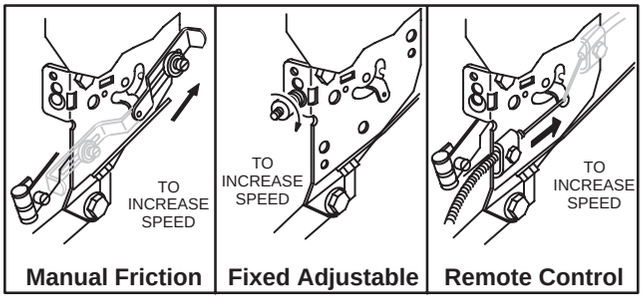

Fig. 455

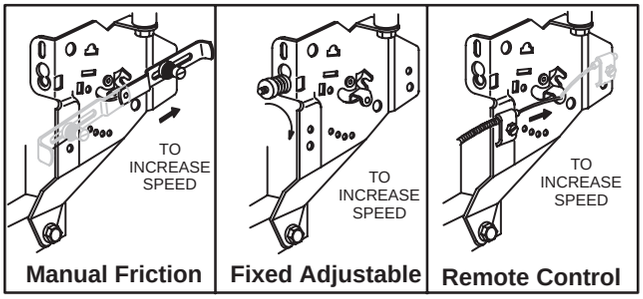

Fig. 456

MODELS 170400, 190400, 195400 HORIZONTAL CRANKSHAFT WITH SWIVEL LEVER CONTROL BEFORE DATE CODE 83121600

AIR CLEANERS, CARBURETORS & GOVERNORS, (cont'd)

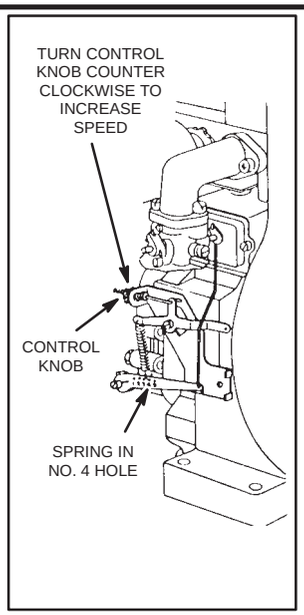

Fig. 457

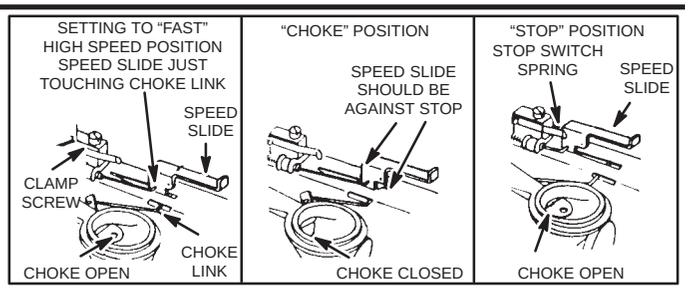

Fig. 458

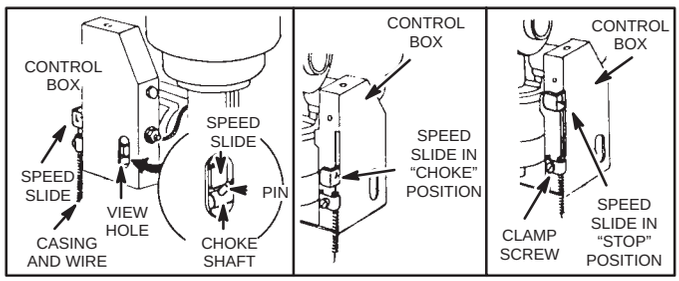

Fig. 459

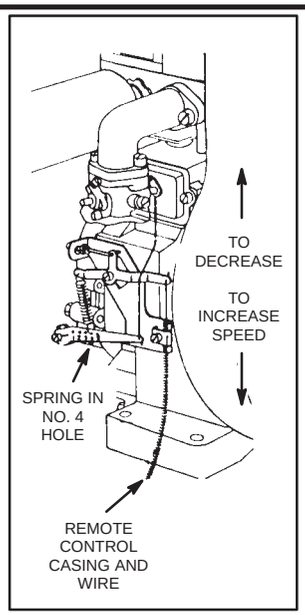

Fig. 460

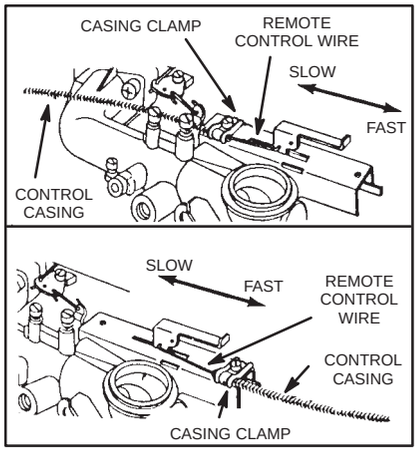

Fig. 461

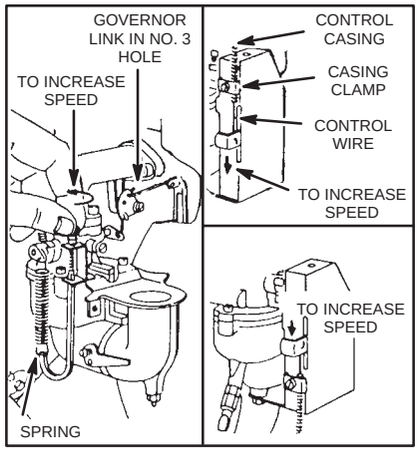

Fig. 462

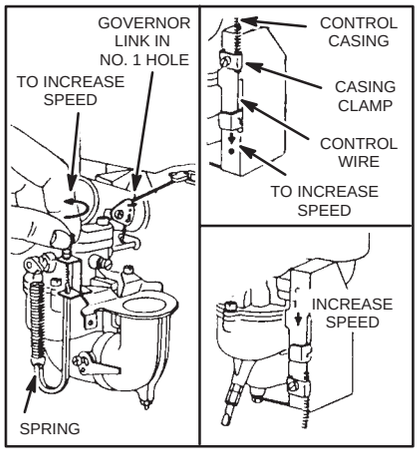

Fig. 463

MODELS 140300, 141300, 141700, 142300, 143300, 143700

AIR CLEANERS, CARBURETORS & GOVERNORS, (cont'd)

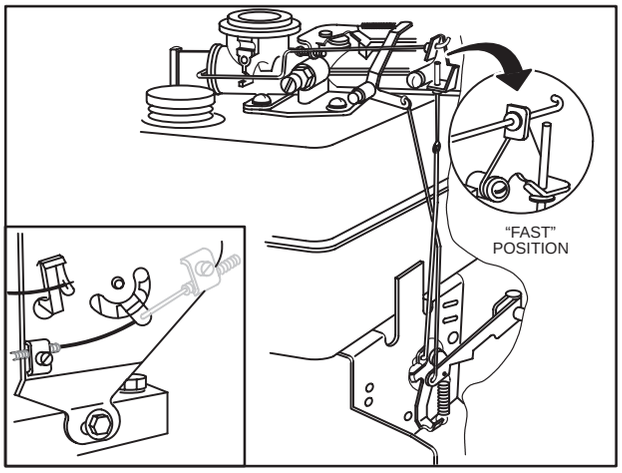

Fig. 464

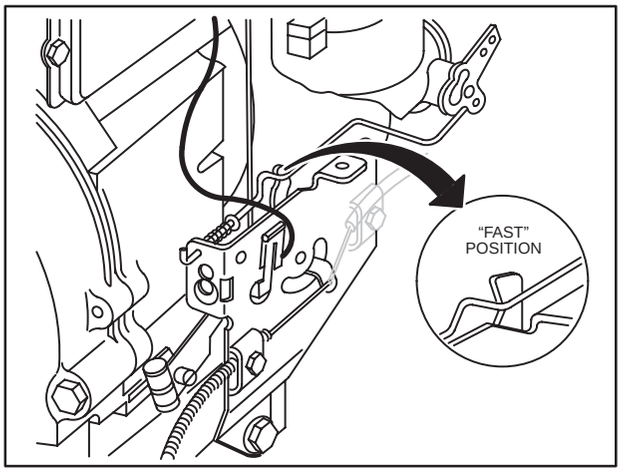

Fig. 465

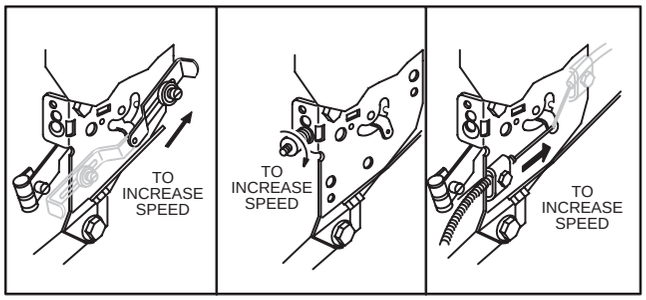

Fig. 466

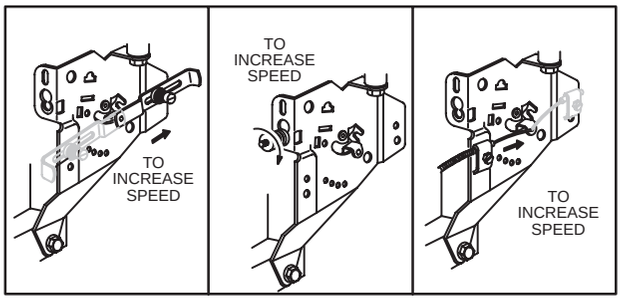

Fig. 467

SETTING TOP SPEED

TOP SPEED LIMIT SCREW POSITION	NO-LOAD TOP SPEED RANGE
None	4000 to 3800 RPM
No. 1 Position	3700 to 3400 RPM
No. 2 Position	3300 to 3000 RPM
No. 3 Position	2900 to 2500 RPM
No. 4 Position	2400 to 1800 RPM

Always set desired no-load speed at power test by bending end of control lever at the spring anchor. See Section 5, Fig. 30.

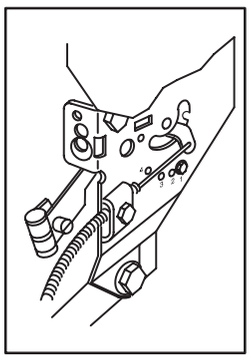

Fig. 468

CHOKE-A-MATIC® top speed range is 4000 to 3700 RPM with standard spring. (Top speed limit screw cannot be used.)

AIR CLEANERS, CARBURETORS & GOVERNORS, (cont'd)

GOVERNED IDLE

To adjust, first make final carburetor mixture adjustment. Then place remote control in idle position. Hold throttle shaft in closed position with finger, adjust idle speed screw to 1550 RPM. Release throttle. Set remote control to 1750 RPM. Loosen governed idle stop and place against remote control lever. Tighten governed idle stop.

Adjustable Spring Loaded Screw Type

Follow above procedure, turn screw until it contacts remote control lever. See Fig. 469.

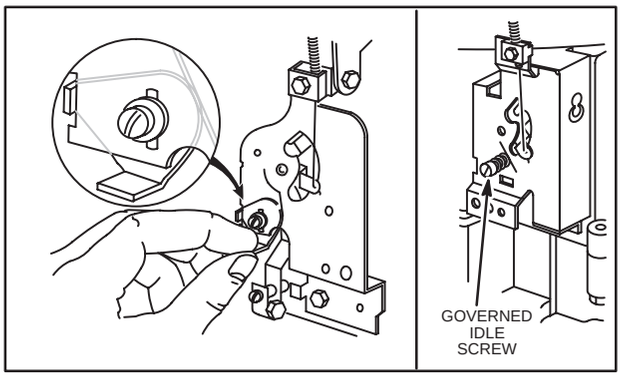

Fig. 469

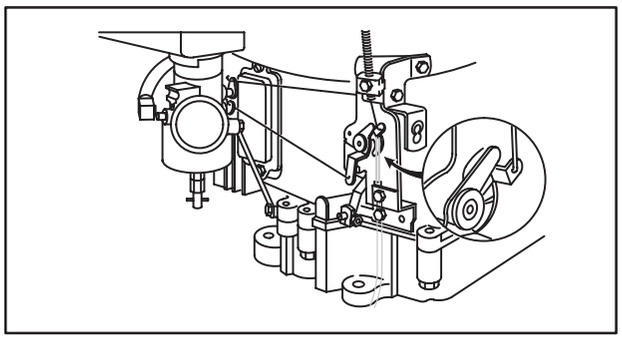

Fig. 470

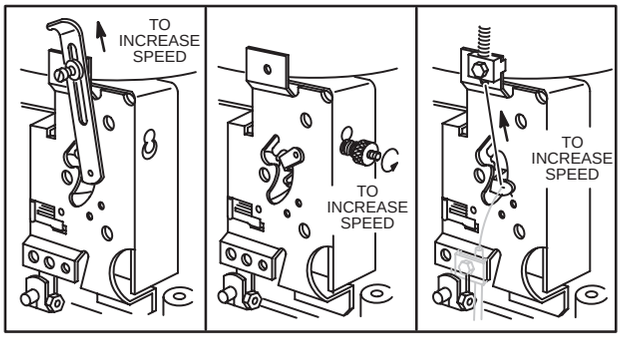

Fig. 471

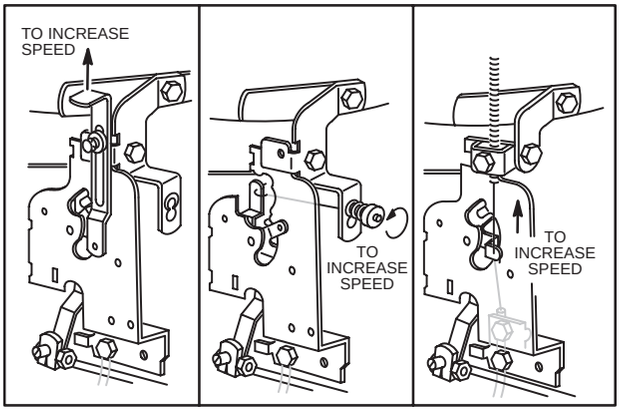

Fig. 472

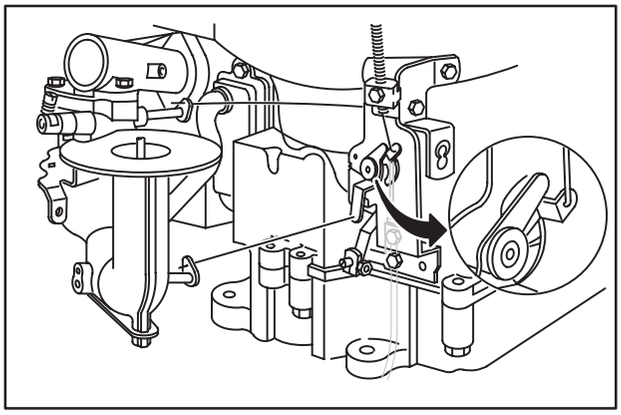

Fig. 473

SETTING TOP SPEED

TOP SPEED LIMIT SCREW POSITION	NO-LOAD TOP SPEED RANGE
None	4000 to 3500 RPM
No. 1 Position	3400 to 2900 RPM
No. 2 Position	2800 to 2400 RPM

Always set desired no-load top speed at power test by bending end of control lever at the spring anchor. See Section 5, Fig. 30.

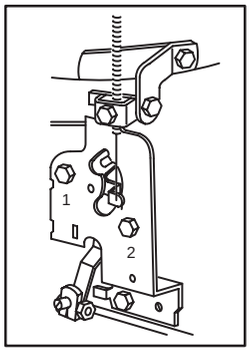

Fig. 474

CHOKE-A-MATIC® top speed range is 4000 to 3000 RPM with standard spring. (Top speed limit screw cannot be used.) See Top Speed Limit Illustration, Section 5, Fig. 30.

AIR CLEANERS, CARBURETORS & GOVERNORS, (cont'd)

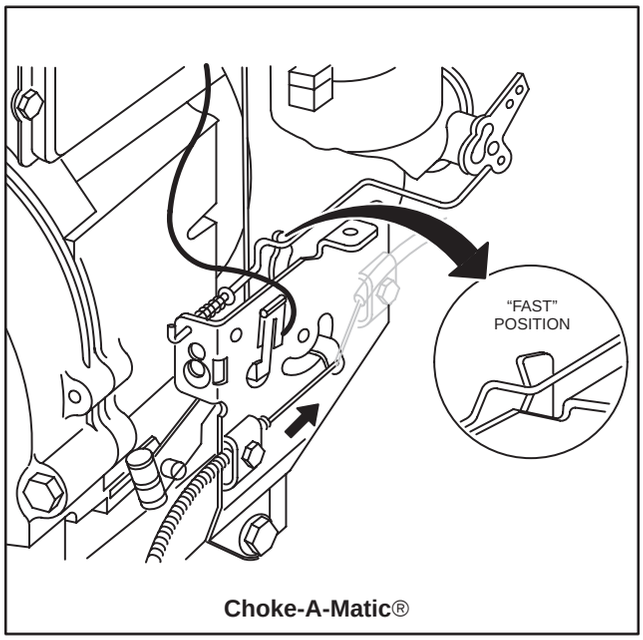

Fig. 475

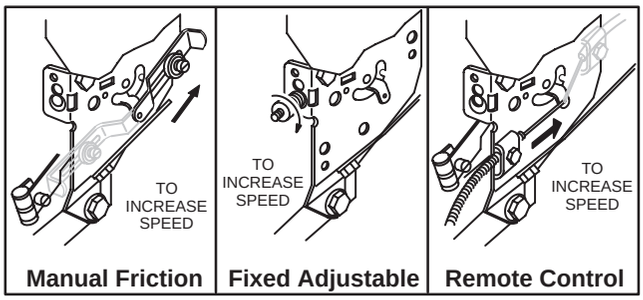

Fig. 476

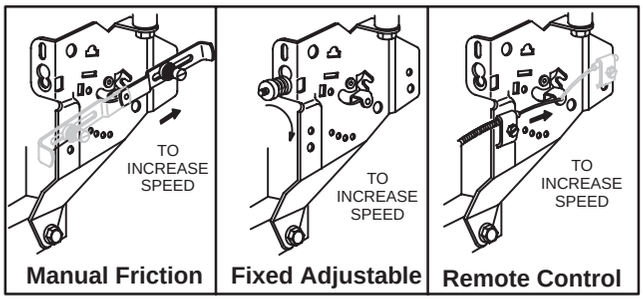

Fig. 477

MODELS 220400, 221400, 251400, 252400 HORIZONTAL CRANKSHAFT WITH SWIVEL LEVER CONTROL BEFORE DATE CODE 83121600

AIR CLEANERS, CARBURETORS & GOVERNORS, (cont'd)

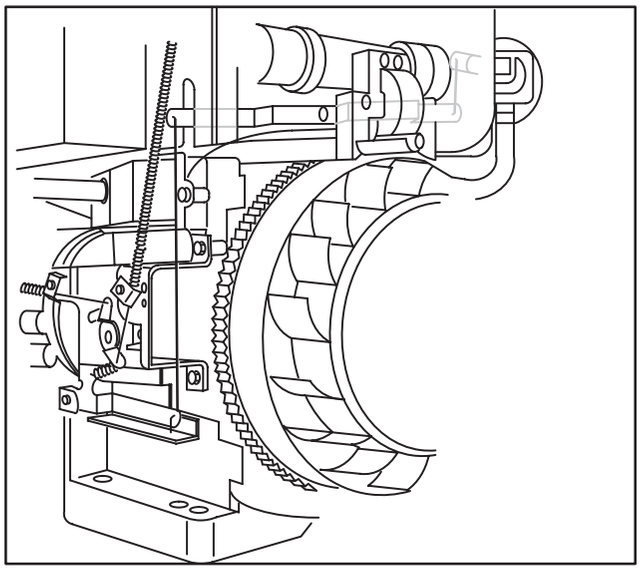

Fig. 478

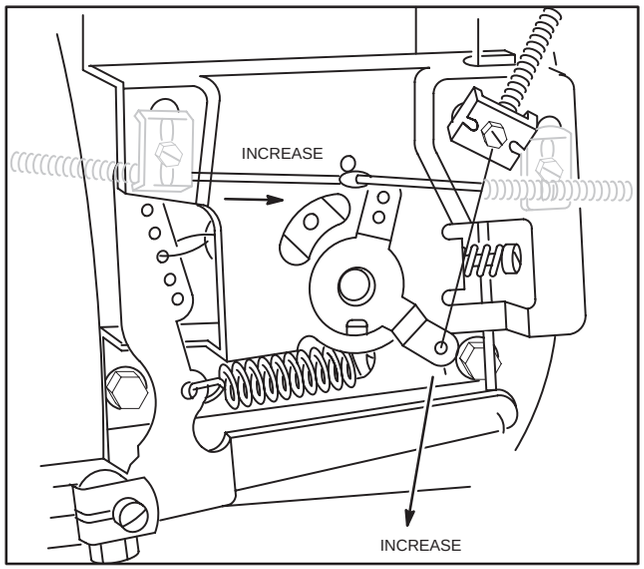

Fig. 479

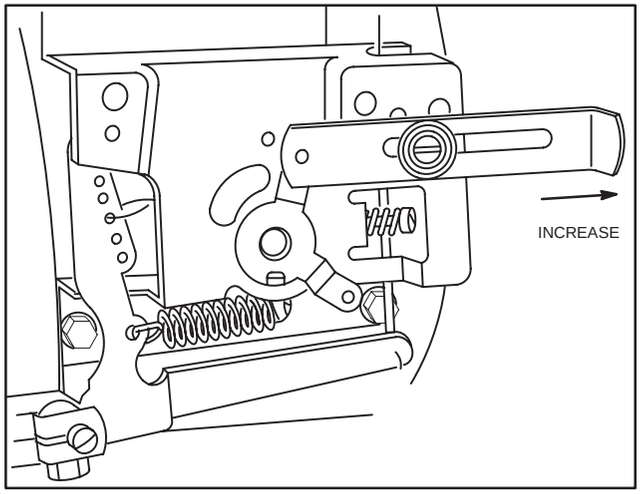

Fig. 480

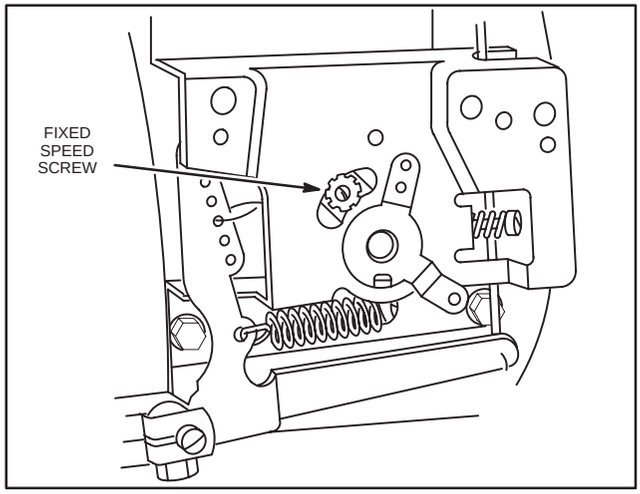

Fig. 481

MODEL 253400 HORIZONTAL CRANKSHAFT

AIR CLEANERS, CARBURETORS & GOVERNORS, (cont'd)

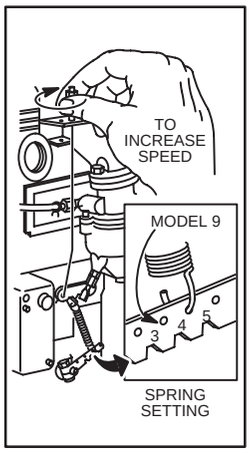

Fig. 482

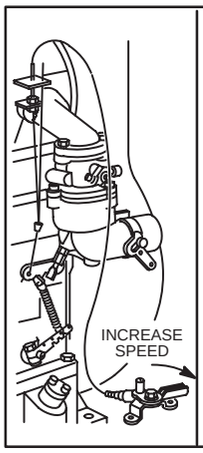

Fig. 483

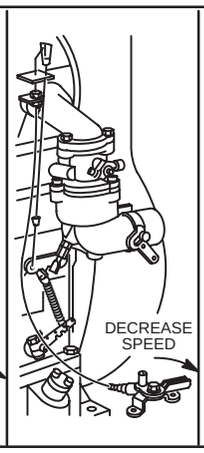

Fig. 484

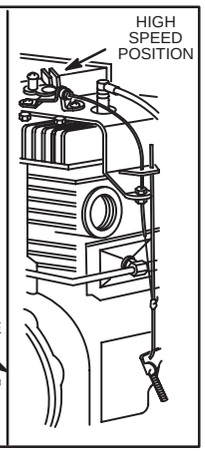

Fig. 485

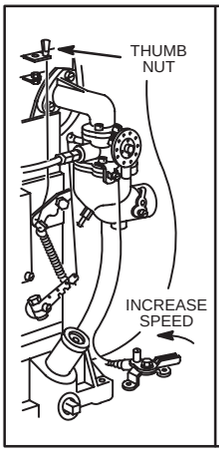

Fig. 486

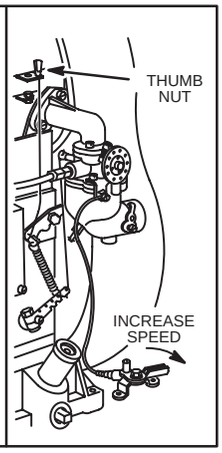

Fig. 487

REMOTE GOVERNOR CONTROL

Attach remote control casing and wire as shown in Fig.'s 483 or 484. Do not change the position of the small elastic stop nuts. They provide for a governed idle speed and protection against overspeeding.

THUMB NUT ADJUSTMENT

Remove thumb nut and upper elastic stop nut. Replace thumb nut and adjust to desired operating speed. See Fig. 485. Do not change the position of the lower elastic stop nut. It provides protection against overspeeding.

GOVERNED IDLE

All engines in Model Series 243400, 300400, 320400 and some Model Series 23D and 233400 engines use two governor springs as shown in Fig's. 488 to 491. The shorter spring keeps the engine on governor, even at idle speed. If moderate loads are applied at idle, the engine will not stall.

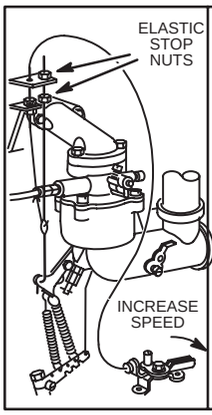

Fig. 488

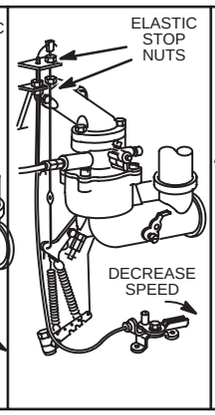

Fig. 489

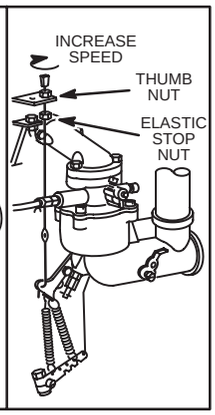

Fig. 490

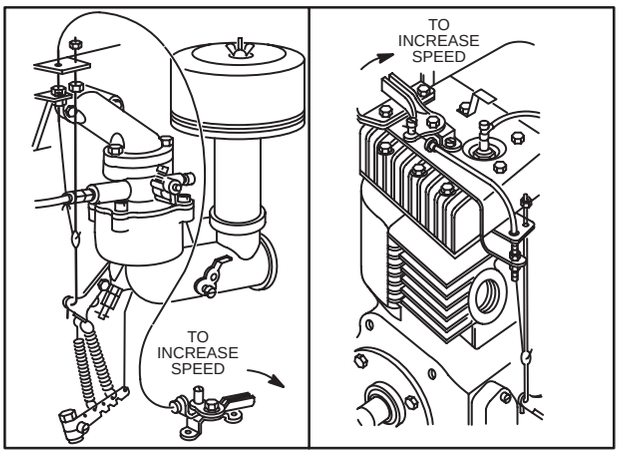

Fig. 491

AIR CLEANERS, CARBURETORS & GOVERNORS, (cont'd)

TO ADJUST FOR GOVERNED IDLE

First make final carburetor mixture adjustments. Then place remote control in idle position. Hold throttle shaft in closed position and adjust idle screw to 1000 RPM. Release the throttle. With remote control in idle position, adjust upper elastic stop nut to 1200 RPM. See Fig. 487.

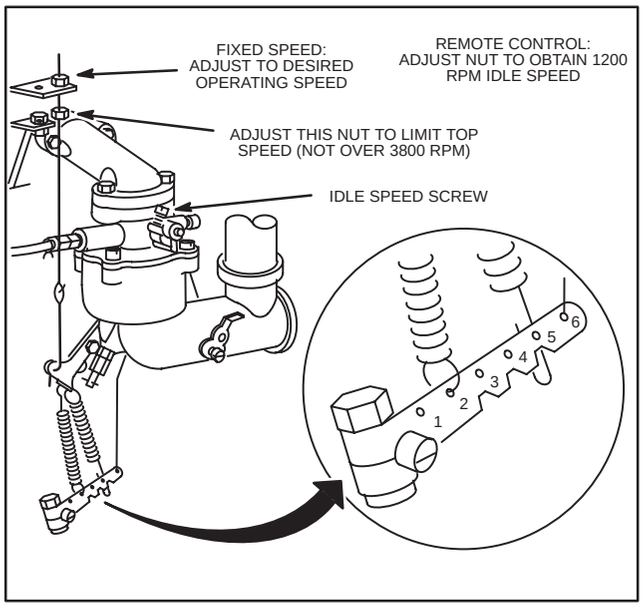

Fig. 492

MODEL 190000 CAST IRON HORIZONTAL CRANKSHAFT

Section 4
COMPRESSION

To Check Compression

Briggs & Stratton does not publish compression pressures, as it is extremely difficult to obtain an accurate reading without special equipment.

It has been determined through extensive testing, a simple and accurate indication of compression can be made as follows:

Spin the flywheel counterclockwise (flywheel side) against the compression stroke. A sharp rebound indicates satisfactory compression. Slight or no rebound indicates poor compression.

Loss of compression will usually be the result of the following:

1. Cylinder head gasket blown or leaking.
2. Valves sticking or not seating properly.
3. Piston rings not sealing, broken or worn which would also cause the engine to consume an excessive amount of oil.

Carbon deposits in the combustion chamber should be removed every 100 to 300 hours of use (more often when run at a steady load), or whenever the cylinder head is removed.

To Remove Cylinder Head and Shield

Always note the position of the different cylinder head screws so that they may be properly reassembled. If a screw is used in the wrong position, it may be too short and not engage enough threads. It may be too long and bottom on a fin, either breaking the fin, or leaving the cylinder head loose.

Cylinder Head Torque Procedure

Assemble the cylinder head with a new head gasket, cylinder head shield (when used), screws and washers in their proper places. (Graphite grease or Part #93963 should be used on cylinder head screws.)

Do not use a sealer of any kind on gasket. Tighten the screws down evenly by hand. Use a torque wrench and tighten head bolts in the sequence shown, Fig. 493, and to the specified torque in Table No. 14.

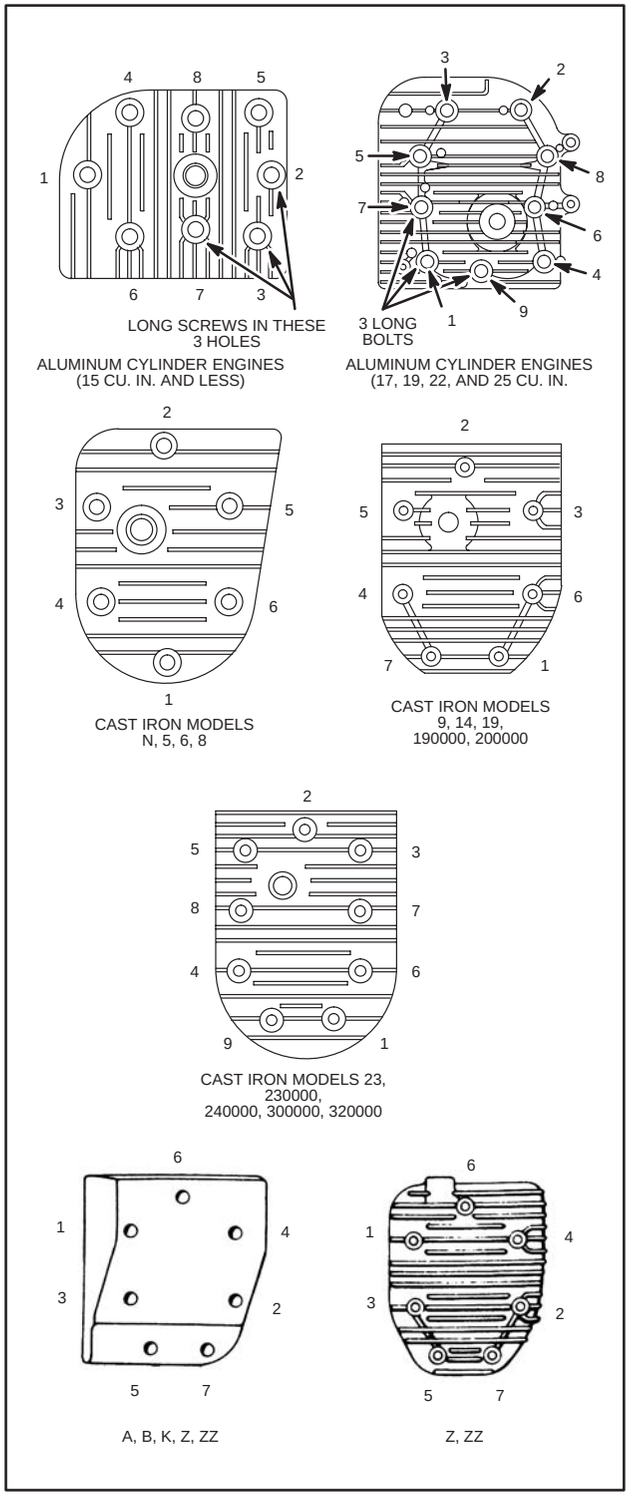

Fig. 493 – TORQUE PATTERN, CYLINDER HEADS

COMPRESSION (cont'd)

Do not turn one screw down completely before the others, as it may cause a warped cylinder head.

Table No. 14
CYLINDER HEAD TORQUE

BASIC MODEL SERIES	
ALUMINUM CYLINDER	**Inch Pounds**
6B, 8B, 60000, 80000, 82000, 90000, 100000, 110000, 130000	140
140000, 170000, 190000, 220000, 250000	165
CAST IRON CYLINDER	**Inch Pounds**
A, H, I, IBP, L, M, N, NS, S, T, U, WBG, WM, WMB, WMG, WMI, Y, 5, 6, 8, 9	140
B, 14	165
K, Q, R, W, WA, Z, ZZ, 19, 19D, 23, 190000, 200000, 230000, 240000, 300000, 320000	190

To Check Tappet Clearance – Cast Iron Model Series A through ZZ & 5 Through 23D

Turn flywheel until valve opens to the highest point. Then turn flywheel one complete revolution. This will turn the cam gear a half revolution and will place lobes in a 180° position from the tappets. Repeat for each valve. The valve clearance should be as shown in Table No. 15. On later models, the valve clearance is stamped on the name plates on the engines. Always check clearances when engine is cold.

To Check Tappet Clearance – Model Series 6B Through 320000

Place valves in their correct guides in cylinder. Turn crankshaft until piston comes to top dead center, compression stroke. Both valves should be closed. Turn crankshaft past top dead center until piston is 1/4" down from top of cylinder.

To Adjust Tappet Clearance – A Through ZZ, 5 Through 23 & 6B Through 250000

See Special Instructions for:
Model Series F, FB, FC, FE, FH, FHI – Page 3
FG, FI – Page 3
P, PB – Page 4
K, Q, R, W, Z & ZZ – Page 3

The clearance is adjusted on most models by grinding the required amount from the end of valve stem, Fig. 494. Be sure the cam gear is turned in the proper position as explained in paragraph "*To Check Tappet Clearance," page 2,* and that the end of stem is ground at right angles. Check clearance of intake and exhaust valves to tappets with feeler gauge, Table No. 15. If clearance is too much, cut valve seat until correct clearance is obtained. Narrow the seat, if required, to maintain 3/64 to 1/16" seat width. Special instructions are as follows:

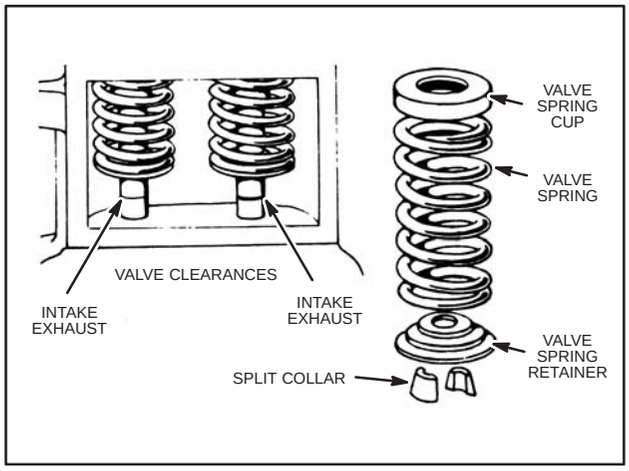

Fig. 494 – CHECKING AND ADJUSTING VALVES

COMPRESSION (cont'd)

Table No. 15
VALVE TAPPET CLEARANCES

CAST IRON ENGINE MODEL SERIES				
	INTAKE		EXHAUST	
	MAX.	MIN.	MAX.	MIN.
A (5 Digit)	.007	.005	.009	.007
A (6 Digit)	.009	.007	.011	.009
	INTAKE		EXHAUST	
	MAX.	MIN.	MAX.	MIN.
A with TPA Ex. Valves	.009	.007	.016	.014
B (5 Digit)	.007	.005	.009	.007
B (6 Digit)	.009	.007	.011	.009
B with TPA Ex. Valves	.009	.007	.016	.014
F, FB, FC, FE, FH, FHI	1/16	1/32	.013	.011
FG, FI	.007	.005	.007	.005
FJ-1 & 2	.011	.009	.021	.019
H	.011	.009	.021	.019
I, IBP	.009	.007	.016	.014
K	.007	.005	.015	.013
L	.011	.009	.021	.019
M	.007	.005	.009	.007
N, NS	.009	.007	.016	.014
P, PB	3/32	1/16	.021	.019
Q, R, S, T, W	.007	.005	.009	.007
U, WBG, WI, WM, WMB, WMG, WMI	.009	.007	.016	.014
Y	.011	.009	.021	.019
Z	.009	.007	.016	.014
ZZ	.012	.019	.019	.017
ZZ with TPA Ex. Valves	.021	.019	.023	.021
5, 6, 8	.009	.007	.016	.014
9, 14	.009	.007	.016	.014
9, 14 with TPA Ex. Valves	.009	.007	.019	.017
23	.009	.007	.019	.017
23 with TPA Ex. Valves	.009	.007	.023	.021
190000, 200000	.009	.007	.016	.014
230000, 240000, 300000, 320000	.009	.007	.019	.017
Aluminum Engine Model Series				
6B, 8B, 60000, 80000, 90000, 100000, 110000	.007	.005	.009	.007
130000, 140000, 170000, 190000, 220000, 250000	.007	.005	.011	.009

Models F, FB, FC, FE, FH, FHI

The intake valve is automatic. The exhaust valve clearance is secured by loosening the rocker arm set screw and then raising or lowering the rocker arm fork until desired clearance is obtained. It should then be locked into place with the set screw. If rocker arm fork is removed, make sure that slug, Part #65232 (NLA), is placed ahead of set screw when reassembling, Fig. 495.

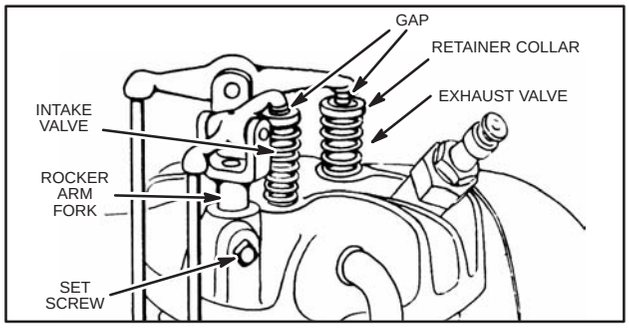

Fig. 495 – ADJUSTING VALVES

Models FG, FI

Valve clearances for both intake and exhaust valves are secured by following instructions for Model F, FB, FC, FE, FH, FHI exhaust valve, Fig. 495.

Models K, Q, R, W, Z, ZZ

Valve clearance is adjusted by loosening tappet locknut and turning tappet screw to desired position. Securely tighten the tappet locknut after adjusting valve clearance, Fig. 496.

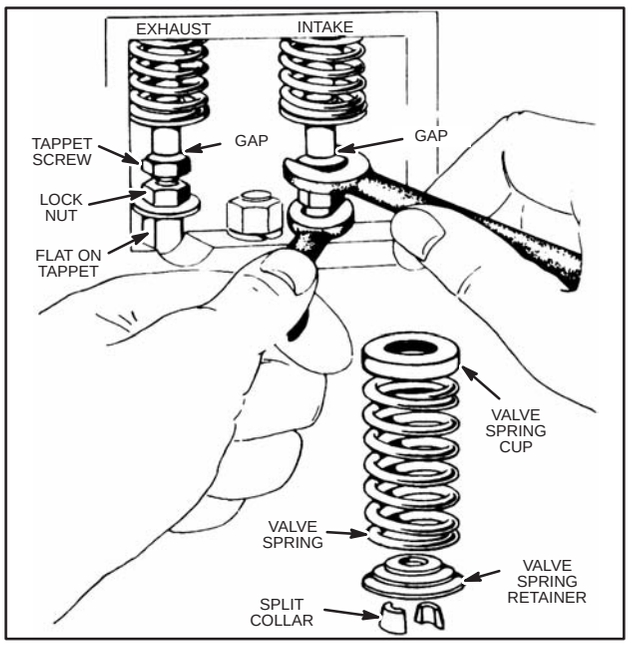

Fig. 496 – ADJUSTING VALVE CLEARANCE

COMPRESSION (cont'd)

Models P, PB

The intake valve is automatic. Exhaust valve clearance is adjusted by loosening tappet locknut and turning tappet screw to desired position. Securely tighten tappet locknut after adjusting clearance.

If there is not enough clearance, grind ends of valves square until correct clearance is obtained.

WARNING: Wear eye protection when installing and removing valve springs.

To Remove and Replace Valve and Valve Springs Alpha & Numeric-Alpha Models

The valve springs and retainers are held in place on the larger engines with tapered collars and on smaller engines with a pin the valve stem.

Models I, N, NS, U, WI, WM, WMB, 5, 6, 8

Use a screw driver and open end wrench to pry up on valve spring and a needle nose pliers to remove and insert the pin when replacing the valve and springs, Fig's. 497 through 502.

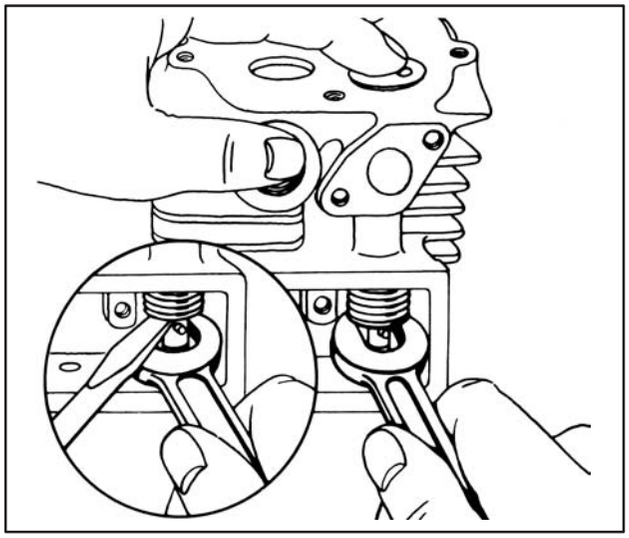

Fig. 497 – REMOVING VALVES AND REPLACING VALVES

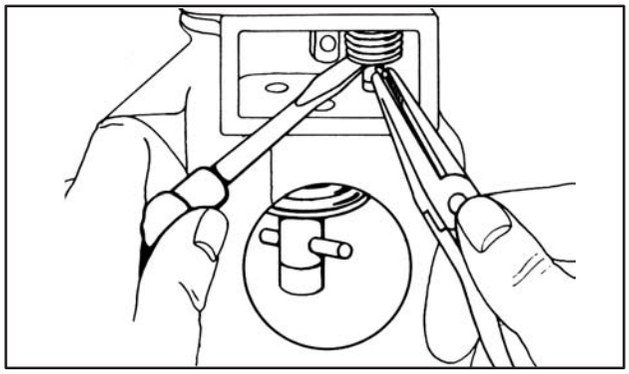

Fig. 498 – REMOVING VALVES AND REPLACING VALVES

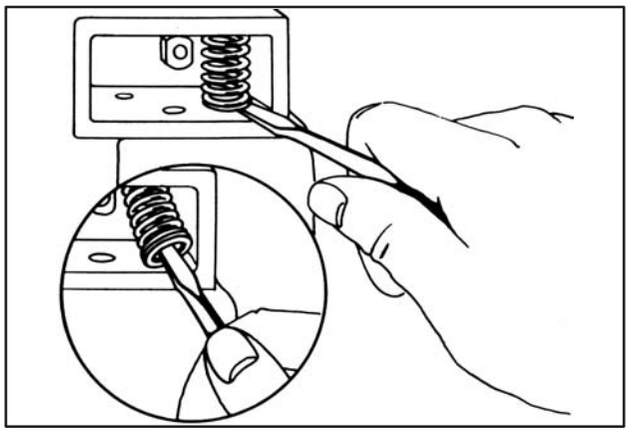

Fig. 499 – REMOVING VALVES AND REPLACING VALVES

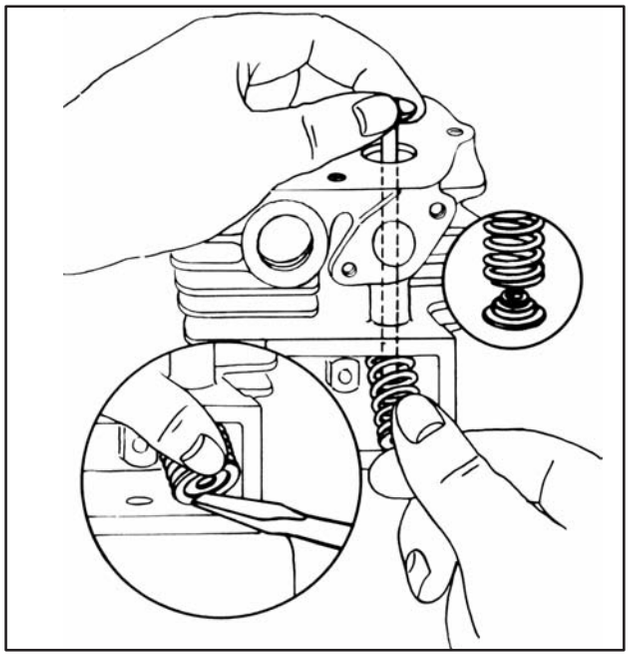

Fig. 500 – REMOVING VALVES AND REPLACING VALVES

COMPRESSION (cont'd)

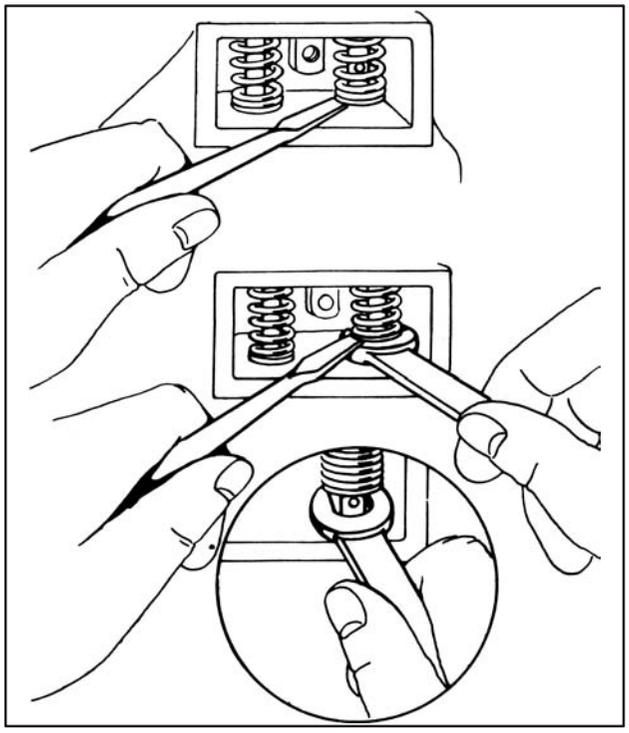

Fig. 501 – REMOVING VALVES AND REPLACING VALVES

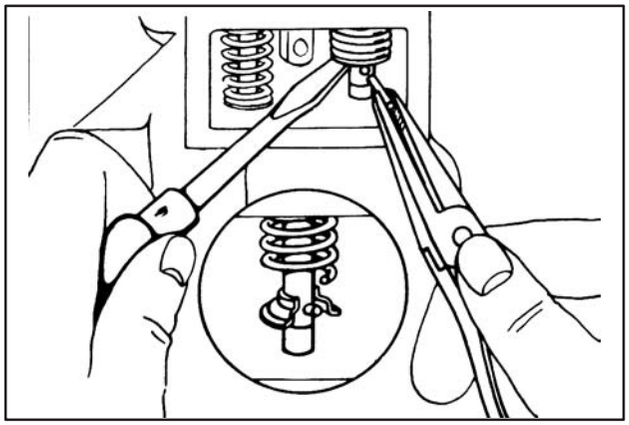

Fig. 502 – REMOVING VALVES AND REPLACING VALVES

TO REMOVE VALVES

Models A, FJ, H, K, L, M, Q, R, S, T, W, Y, Z, ZZ and Intake Valve Only on Models B, 14, and 23

Place valve spring compressor on top and outside of valve chamber and under valve spring retainer as shown in Fig. 503. Compress valve spring compressor as much as possible and until compressor automatically locks. Tap top of valve to loosen spring collars and pry them out with a screw driver if necessary. Compress spring enough to release lock on spring compressor and pull out compressor. Remove valve collars from valve chamber.

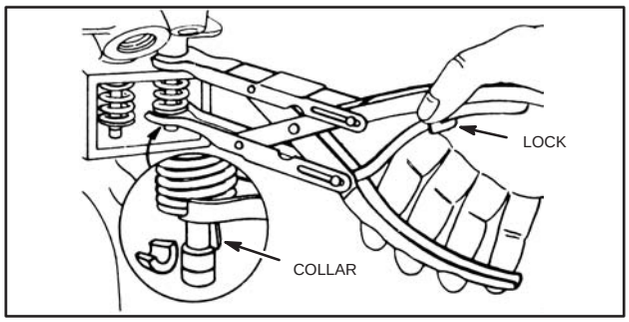

Fig. 503 – REMOVING VALVES

To remove spring retainers, spring, and spring cup, pry them out with a screw driver as shown in Fig. 504.

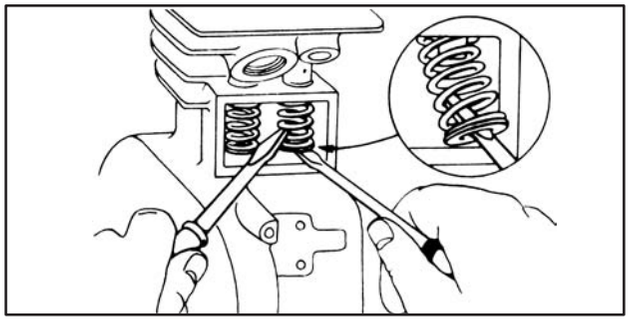

Fig. 504 – REMOVING VALVES

Model 9 and Exhaust Valve Only on Models B, 14, and 23

Place valve spring compressor as shown in Fig. 505 with a steel or hardwood block at the bottom of chamber. Pry up valve spring with end of compressor. Proceed with balance of operations same as above.

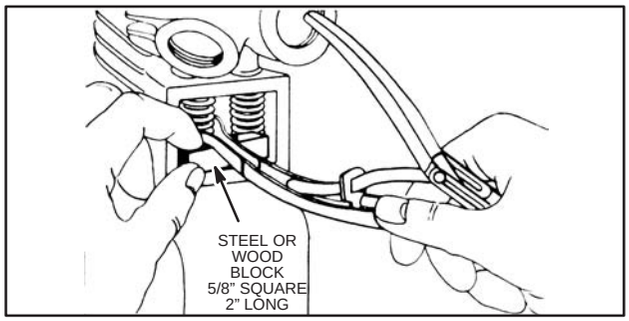

Fig. 505 – REMOVING VALVES

COMPRESSION (cont'd)

TO ASSEMBLE VALVE SPRINGS

Models A, B, FJ-1 or 2, H, L, M, Q, R, S, T, W, Z, ZZ, 9, 14, 23

Place valve spring retainer and cup into compressor as shown in Fig. 506. Compress spring as much as possible and until compressor automatically locks. Then place spring into valve chamber as shown in Fig. 506 and insert valve.

NOTE: Models FJ-1 or 2, H, L, M, S, T, & Y do not use valve spring cup.

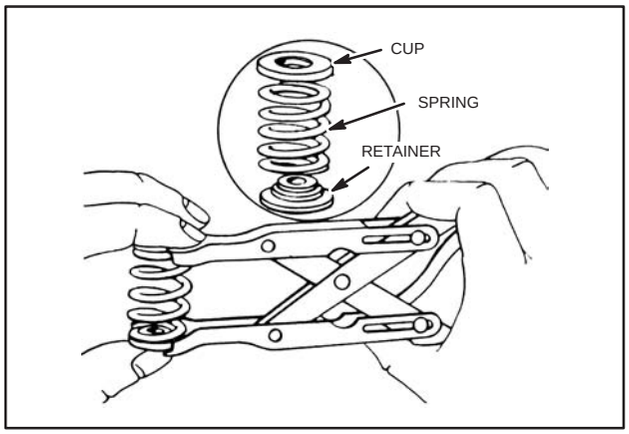

Fig. 506 – REMOVING VALVES

To assemble collar, put a small amount of grease on end of screw driver and inside each half of collar as shown in Fig. 507, and insert into valve stem. Compress spring enough to release lock on spring compressor and pull out compressor. See that valve spring collar fits into retainer.

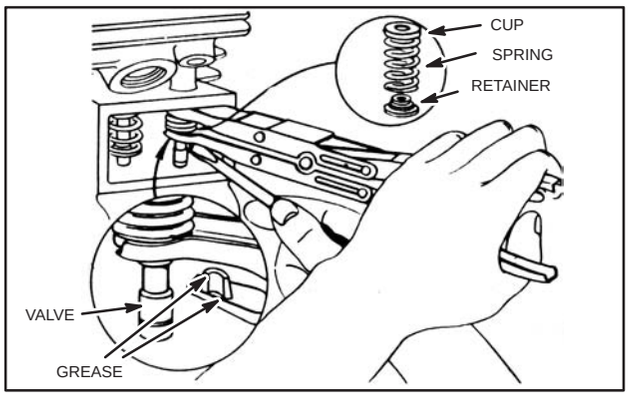

Fig. 507 – REMOVING VALVES

Models F, FB, FC, FE, FH, FHI

To remove the intake valve, file or grind off peened head of the valve stem.

To remove exhaust valve place part (A), Tool #65292-2-T1 (NLA) under the valve head as shown in Fig. 508, Ill. 1. Be sure that this round tool stays under the valve head. Place slotted hole in tool (C) over the retainer as shown in Fig. 508, Ill. 1. Press down tool (C) and release the collar that holds the retainer in place. Remove retainer and spring to take out valve.

To assemble intake valve, insert tool (A) under valve head. Replace the spring and press the retainer on part way with tool (B) as shown Fig. 508, Ill. 2. Insert tool (C) between the end of valve stem and retainer above the spring Fig. 508, Ill. 2. This allows for the correct valve clearance. The thickness of tool (C) is about .036" which regulates proper valve opening. Press retainer down as far as possible and peen over the end of valve carefully to hold the retainer in place.

To assemble exhaust valve, insert valve and place tool (A) under valve head. Assemble spring and retainer. Compress spring with tool (C) and insert collars.

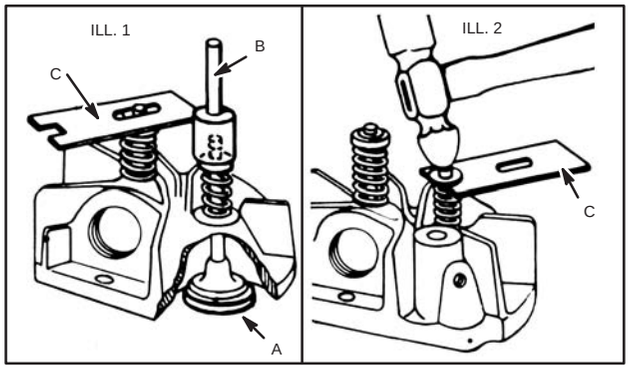

Fig. 508 – REMOVING AND ASSEMBLING VALVES MODEL FH

Models FG, FI

To remove and reassemble intake or exhaust valve, follow instructions for Model F, FB, FC, FE, FH, FHI exhaust valve.

Models P, PB

Loosen compression release set screw and carburetor elbow clamp. Remove intake valve. If valve is tight use kerosene or penetrating oil to loosen.

To remove exhaust valve, lift valve spring and retainer with the end of a screw driver and with a long nose pliers, remove the pin from the valve stem. Pry spring out with screw driver. To replace valves, reverse operation.

COMPRESSION (cont'd)

To Remove Valves

(Numeric-Alpha and All Numeric Models)

Fig. 509 shows three methods used to hold valve spring retainers. To remove types shown in Ill. 1 and Ill. 2, use Tool #19063 Valve Spring Compressor, adjusting jaws until they just touch the top and bottom of the valve chamber. This will keep the upper jaw from slipping into the coils of the spring. Push the compressor in until the upper jaw slips over the upper end of the spring. Tighten the jaws to compress the spring, Fig. 510. Remove collars or pin and lift out valve. Pull out compressor and spring, Fig. 511.

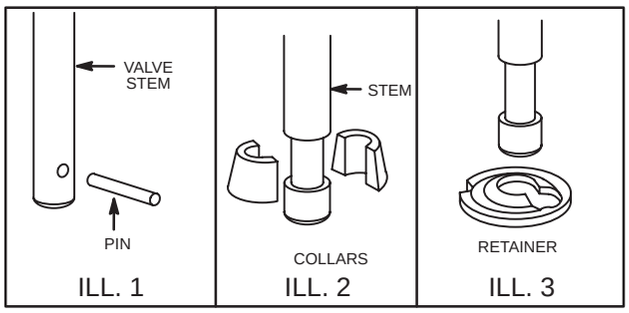

Fig. 509 – VALVE SPRING RETAINERS

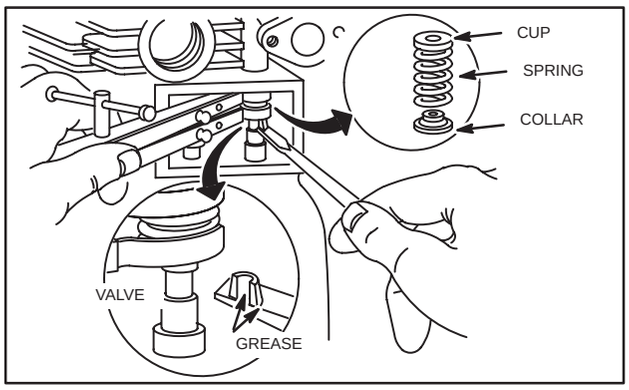

Fig. 510 – REMOVING SPRING

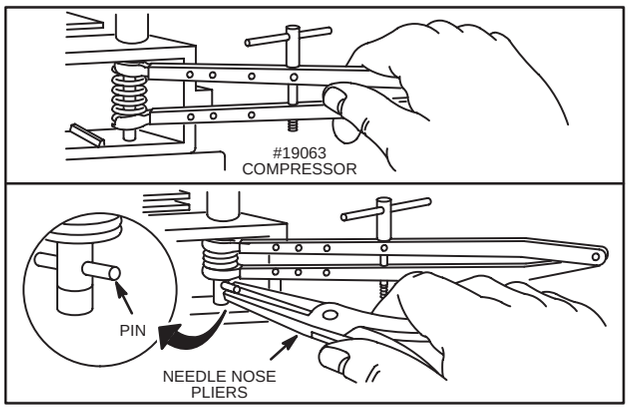

Fig. 511 – REMOVING SPRING

To remove valves using retainers, Fig. 509, Ill. 3 slip the upper jaw of Tool #19063, Valve Spring Compressor, over the top of the valve chamber and lower jaw between spring and retainer. Compress spring. Remove retainer. Pull out valve. Remove compressor and spring, Fig. 512.

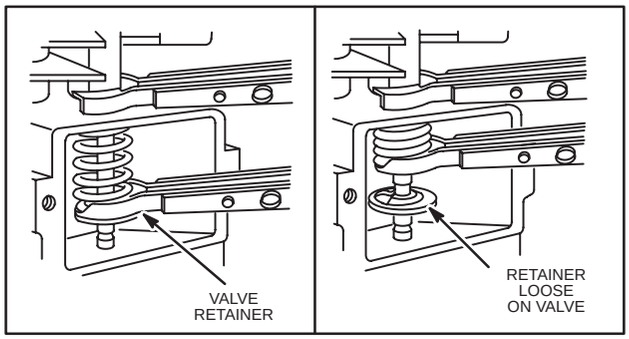

Fig. 512 – REMOVING RETAINER AND SPRING

To Reface Valves and Seats

Valve faces should be resurfaced on a valve grinder. Valve seats are cut using Tool #19237, Neway Valve Seat Cutter Kit, to 45° on exhaust and some intake seats. Other intake seats are cut to 30°. Valve and seat are lapped in using Tool #19258, Valve Lapping Tool, and Part #94150, Valve Lapping Compound, to remove grinding marks and assure a good seal between the valve face and the seat.

Valve seat width should be 3/64" to 1/16," Fig. 513. If the seat is wider, a narrowing cutter should be used. If valve face or seat are badly burned, the burned part should be replaced. Replace valve if margin is 1/64" or less, Fig. 513.

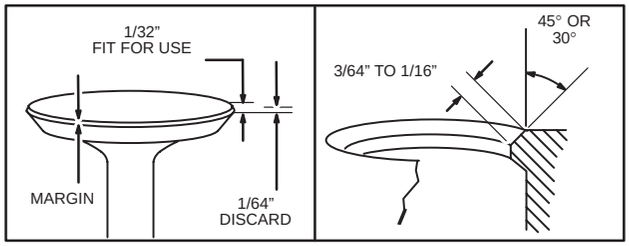

Fig. 513 – VALVE AND SEAT DIMENSIONS

NOTE: Check valve clearances while engine is cold.

To Install Valves

Some engines use the same spring for intake and exhaust side, while others use a heavier spring on the exhaust side. Compare springs before installing.

NOTE: Apply "LED-PLATE" or Part #93963 Lubricant, to valve stems and guides before installing. Be sure that "LED-PLATE" or Part #93963 is not on the ends of the valve stems or tappets.

COMPRESSION (cont'd)

If retainers are held by a pin or collars, Fig. 509, Ill. 1 and Ill. 2, place valve spring and retainer (and cup on Model Series 9, 14, 19, 20, 23, 24, and 32) into Tool #19063, Valve Spring Compressor. Compress spring until it is solid. Insert the compressed spring and retainer (and cup when used) into valve chamber. Then drop the valve into place, pushing the stem through the retainer. Hold the spring up in the chamber, and the valve down. Insert the retainer pin with a needle nose pliers or place the collars in the groove in the valve stem. Lower the spring until the retainer fits around the pin or collars, then pull out the spring compressor, Fig. 510. Be sure pin or collars are in place.

If self-lock retainer, Fig. 509, Ill. 3 is used, compress retainer and spring with Tool #19063, Valve Spring Compressor until spring is solid. Large hole of retainer should face toward opening in Tool #19063, Valve Spring Compressor, Fig. 514. Insert compressed spring and retainer into valve chamber.

Lower valve stem through large hole of retainer slot and then push down and in on compressor until retainer bottoms on valve stem shoulder. Release valve spring compressor until it is just free of spring tension and withdraw compressor, Fig. 514.

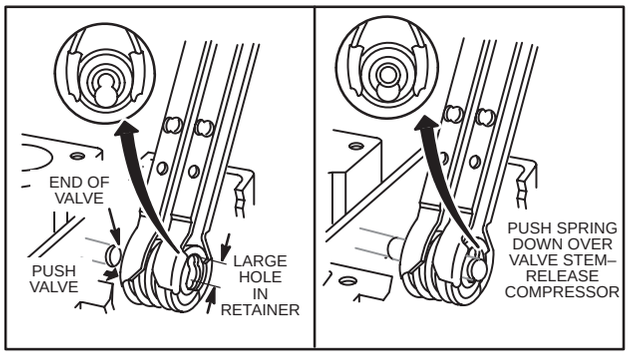

Fig. 514 – INSTALLING VALVES

VALVE GUIDES

To Service 1/4" Valve Guides

Model Series 5, 6, 8, 6B, 8B, 60000, 80000, 82000, 92000, 94000, 95000, 100000, 110000, 130000

If flat end of Tool #19122, Valve Guide Plug Gauge, can be inserted into valve guide a distance of 5/16", Fig. 515, Ill. 1, the valve guide is worn and should be rebushed.

To Rebush Worn Aluminum Guides and Worn Cast Iron Guides (Cast Iron Cylinders)

Place pilot of Tool #19064, Counterbore Reamer, in valve guide. Slide Tool #19191, Pilot Bushing, down over counterbore reamer until bushing rests on valve seat. Hold replacement guide bushing, Part #63709 on top of pilot bushing and mark reamer 1/16" above top of bushing, Fig. 515, Ill. 2.

Ream worn valve guide until mark on counterbore reamer is even with top of pilot bushing. Use kerosene or equivalent to lubricate reamer. After guide is counterbored, continue to turn reamer in same direction used to ream guide while withdrawing reamer, Fig. 515, Illus 3.

Position bushing in counterbored guide. Press bushing with Tool #19065 or #19274, Valve Guide Bushing Driver, until bushing is flush with top of guide, Fig. 515, Ill. 4.

Finish ream bushing with Tool #19066, Finish Reamer, using kerosene or equivalent to lubricate reamer, Fig. 515, Ill. 5.

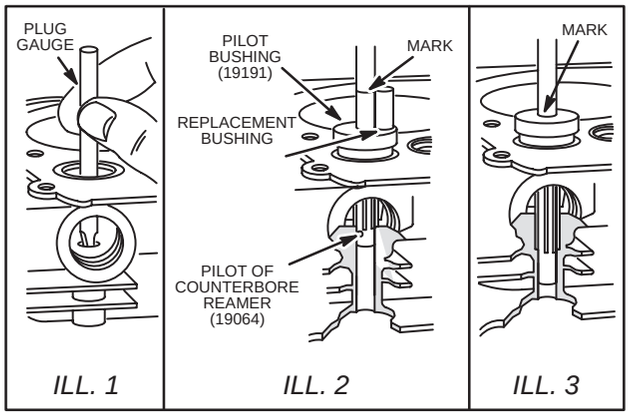

Fig. 515 – BUSHING VALVE GUIDES

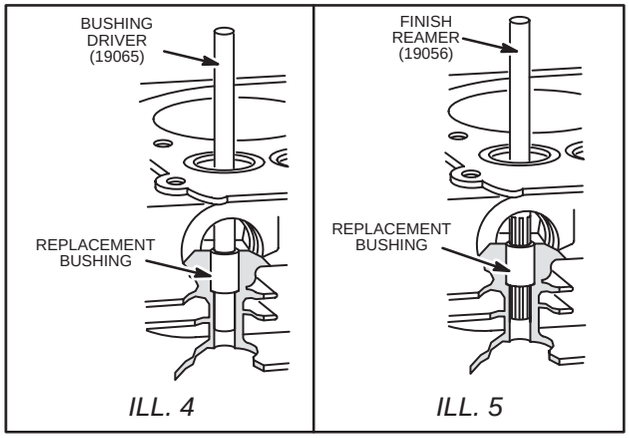

Fig. 515 – BUSHING VALVE GUIDES

COMPRESSION (cont'd)

NOTE: Tool #19191, Pilot Bushing, can be modified to provide more accurate alignment with the valve seat. Counterbore Tool #19191 with Tool #19064. Press in bushing Part #63709 and finish ream with Tool #19066, Fig. 516.

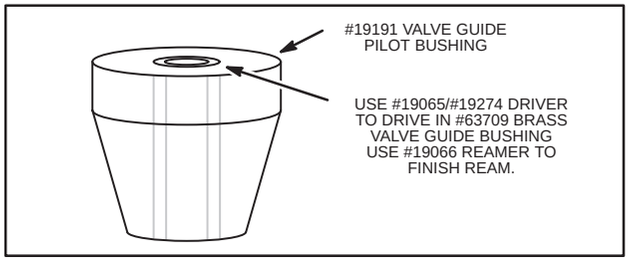

Fig. 516 – MODIFIED PILOT TOOL #19191

To Replace Worn Brass or Sintered Iron Guides

NOTE: To assure accurate alignment of tap, Tool #19273, Tool #19191 may need to be modified. Measure shank of tap, Tool #19273, and either drill or bush Tool #19191 to assure that tap will be square to the bushing to be pulled.

Lubricate Tool #19273, 7 mm Tap, and bushing with engine oil or kerosene. With a tap wrench and pilot bushing, Tool #19191 (modified), turn tap into bushing clockwise until tap is 1/2" deep. **DO NOT** tap more than 3/4" deep. Remove tap and flush chips out of bushing.

Rotate Tool #19272, Puller Nut, up to head of Tool #19271, Puller Screw, and insert puller screw down through Tool #19270, Washer. Thread puller screw into tapped bushing until screw bottoms in tapped hole. Back off screw 1/8 to 1/4 turn. Place a drop of engine oil on threads of puller screw, Fig. 517.

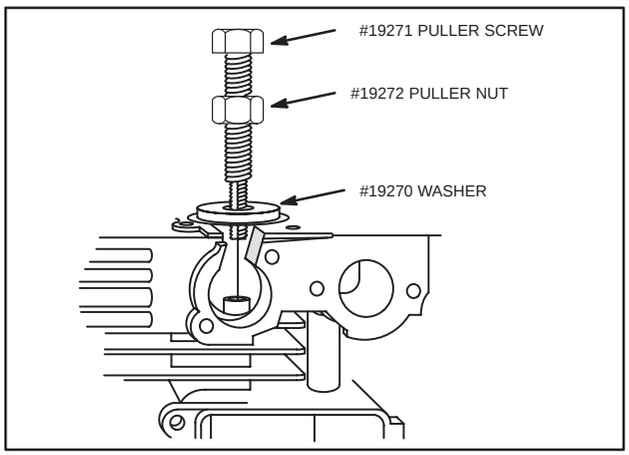

Fig. 517 – PULLING BUSHING

Hold puller screw stationary and turn puller nut down on washer until valve guide bushing is removed, Fig. 517.

Use Table No. 16 to select correct service valve guide bushing.

Table No. 16
GUIDE BUSHING IDENTIFICATION

BUSHING REMOVED FROM CYLINDER				
Sintered Guide Gray or Copper Colored	Brass Guide 1 or 2 Grooves	Brass Guide 1 or 2 Grooves	Brass Guide No Grooves	Alum. Guide or Cast Iron Cylinder
3/4"	3/4"	1–1/16"	3/4"	3/4"
REPLACEMENT BUSHING				
Use Part# 262001	Use Part# 231348	Use Part# 231349	Use Part# 63709	Use Part# 63709

Place grooved or tapered end of new bushing into cylinder valve guide. Press bushing into cylinder with Tool #19065* or #19274, Bushing Driver, until bushing bottoms. Rotate driver while pressing in bushing.

NOTE: Tool #19065 drivers purchased before October 1983 must be modified by reducing driver's tip to .240" when used to press in sintered bushings.

Finish ream bushing with Tool #19066, Finish Reamer, and Tool #19191 (modified), Fig. 516. Finish ream entire guide. Before removing reamer, flush all chips away. Remove reamer by turning reamer in same direction used to ream bushing while pulling up on reamer, Fig. 515.

To Service 5/16" Valve Guides

Model Series 9, 14, 19, 23, 140000, 170000, 190000, 200000, 220000, 230000, 240000, 250000, 300000, 320000

If flat end of Tool #19151, Valve Guide Plug Gauge, can be inserted into guide a distance of 5/16", the guide is worn and should be rebushed.

COMPRESSION (cont'd)

To Rebush Worn Aluminum Guides and Worn Cast Iron Guides (Cast Iron Cylinders)

Place pilot of Tool #19231, Counterbore Reamer, in valve guide. Slide Tool #19234, Pilot Bushing, down over counterbore reamer until bushing rests on valve seat. Hold replacement valve guide bushing, Part #231218, on top of pilot bushing and mark reamer 1/16" above top of bushing, Fig. 518.

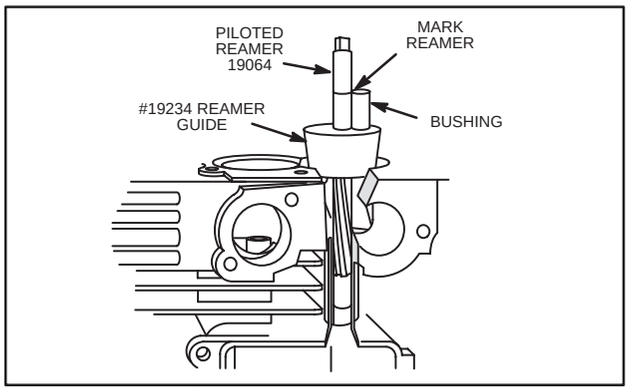

Fig. 518 – REBUSHING

Ream worn valve guide until mark on counterbore reamer is even with top of reamer guide bushing. Use kerosene or equivalent to lubricate reamer. After guide is counterbored, continue to turn reamer in same direction used to ream guide while withdrawing reamer, Fig. 518.

Position bushing in counterbored guide. Press bushing with Tool #19204, Bushing Driver, until bushing is flush with top of guide, Fig. 518.

Finish ream bushing with Tool #19233, Finish Reamer, using kerosene or equivalent to lubricate reamer, Fig. 518.

To Replace Worn Brass or Sintered Iron Guides

Lubricate Tool #19264, 9 mm Tap, and bushing with engine oil or kerosene. With a tap wrench, turn tap into bushing clockwise until tap is 1/2" deep. DO NOT tap more than 1" deep. Remove tap and flush chips out of bushing.

Rotate Tool #19239, Puller Nut, up to head of Tool #19238, Puller Screw, and insert puller screw down through Tool #19240, Washer. Thread puller screw into tapped bushing until screw bottoms in tapped hole. Back off screw 1/8 to 1/4 turn. Place a drop of engine oil on threads of puller screw, Fig. 518.

Hold puller screw stationary and turn puller nut down on washer until valve guide bushing is removed, Fig. 518.

Use Table No. 17 to select correct service valve guide bushing.

Table No. 17
GUIDE BUSHING IDENTIFICATION

BUSHING REMOVED FROM CYLINDER			
Sintered Guide Gray or Copper Colored	Brass Guide 1 or 2 Grooves	Brass Guide No Grooves	Alum. Guide or Cast Iron Cylinder
REPLACEMENT BUSHING			
Use Part# 261961	Use Part# 231218	Use Part# 230655	Use Part# 231218

Place grooved or tapered end of new bushing into cylinder valve guide. Press bushing into cylinder with Tool #19204, Bushing Driver, until bushing bottoms. Rotate driver while pressing in bushing, Fig. 518.

Finish ream bushings, Part #'s 261961 and 231218 with Tool #19233, Finish Reamer, and Tool #19234 Pilot Bushing, until reamer goes through entire guide, Fig. 518. Bushing, Part #230655 does not need to be reamed. Before removing finish reamer, flush all chips away. Remove reamer by turning reamer in same direction used to ream bushing while pulling up on reamer, Fig. 518.

NOTE: Valve seating should be checked after bushing the guide, and corrected if necessary by refacing the seat.

VALVE SEAT INSERTS

The valve seats in the cylinder usually are worn or pitted so little that refacing lightly with a valve seat grinder is all that is necessary. However, if they are too badly burned or cannot be narrowed to dimensions shown in Table No. 18, they should be replaced or new inserts installed. Proceed as follows:

Table No. 18
VALVE SEAT WIDTHS

ENGINE MODEL	MAX. USABLE SEAT WIDTH	NEW SEAT WIDTH
ALL MODELS	5/64"	.047" to .062"

COMPRESSION (cont'd)

Cast Iron Cylinders

Cast iron cylinder engines are equipped with an exhaust valve seat insert which can be removed and a new insert installed. The intake side must be counterbored to allow installation of an intake valve seat insert Fig's. 519, 520, & 521.

Aluminum Cylinders

Aluminum cylinders are equipped with valve seat insert on both exhaust and intake valves and on most engines the seats can be serviced. Refer to illustrated parts list for valve seat insert part numbers.

To Counterbore Cylinder for Intake Valve Seat, Cast Iron Cylinder Models Only

Cast iron cylinder models must be counterbored to allow installation of the intake valve seat insert. Select proper seat insert, Table No. 21, counterbore cutter and pilot according to Table No. 19.

Insert pilot in intake valve guide, Fig. 519. Assemble correct counterbore cutter to cutter shank as shown in Fig. 520.

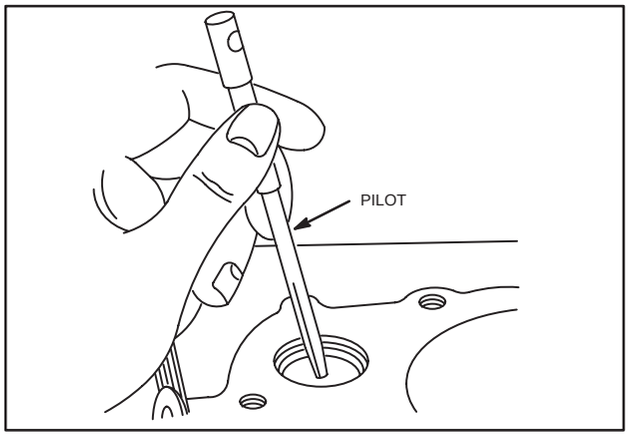

Fig. 519 – INSERTING PILOT

Table No. 19
TOOLS FOR COUNTERBORING CYLINDER FOR VALVE SEAT INSERT

ENGINE MODEL	PILOT #	COUNTERBORE CUTTER #
A, FJ-1 & 2, H, L, M, S, T, Y, 9	19127	19132
B, K, R, W, Z, ZZ, 14, 19, 23, 190000, 200000, 230000, 240000	19127	19131
I, IBP, N, NS, U, WBG, WI, WM, WMB, WMI, 5, 6	19126	19133
8	19126	19132

Select correct counterbore cutter, Table No. 19, and place on cutter shank, Tool #19129. Insert T-handle, Tool #19130, in cutter shank, Fig. 520.

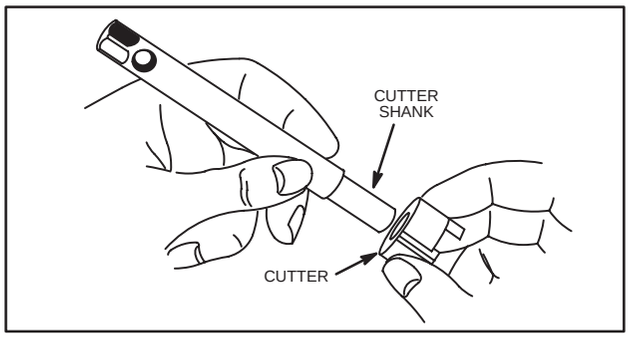

Fig. 520 – INSERTING CUTTER SHANK

Counterbore the hole by hand until stop on cutter touches the top of the cylinder, Fig. 521. **DO NOT** force the cutter to one side or it will cut oversize. Remove cutter shank and cutter to blow out all chips.

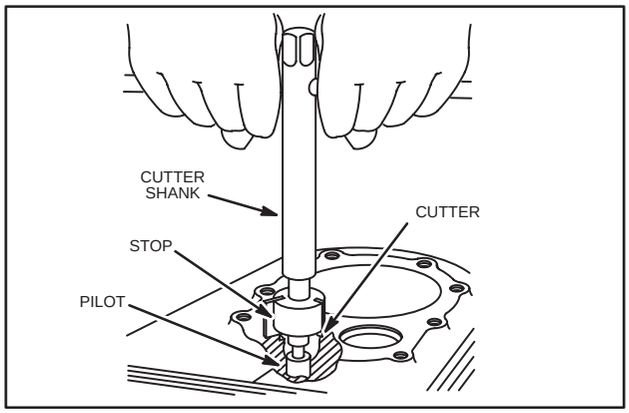

Fig. 521 – COUNTERBORING FOR VALVE SEAT

COMPRESSION (cont'd)

Use Knock-Out Pin, Tool #19135, to remove cutter from shank, Fig. 522.

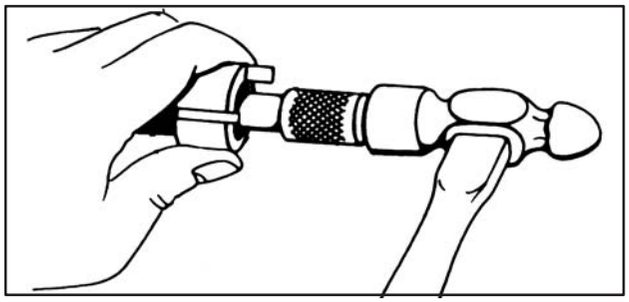

Fig. 522 – REMOVING CUTTER FROM SHANK

To Remove Exhaust or Intake Valve Seat Insert

Select correct tool, Table No. 20, and insert seat puller nut as shown in Fig. 523. With puller nut under valve insert, place body under washer. Tighten 5/16" cap screw with a wrench until valve seat insert comes out of cylinder, Fig. 524.

Table No. 20
TOOLS for REMOVING VALVE SEAT INSERTS

ENGINE MODEL	VALVE SEAT INSERT PULLER BODY*	VALVE SEAT INSERT PULLER NUT
Aluminum Cylinders		
6B, 8B	19138	19140 Ex. 19182 In.
60000, 80000	19138	19140 Ex. 19182 In.
82000, 92000, 94000, 95000, 110000	19138	19140 Ex. 19182 In.
100200, 100900, 130000	19138	19182 Ex. 19139 In.
140000, 170000, 190000	19138	19141
220000, 250000	19138	19141 Ex.
Cast Iron Cylinders		
A, FJ-1 & 2, H, L, M, S, T, Y, 9	Part of 19138	19139
B, K, R, W, Z, ZZ, 14, 23	Part of 19138	19141
I, IBP, N, NS, U, WBG, WI, WM, WMB, WMG, WMI, WI, 5, 6, 8	Part of 19138	19140

* Includes puller body, washer, puller screw and No's. 19139, 19140, 19141, and 19182 nuts.

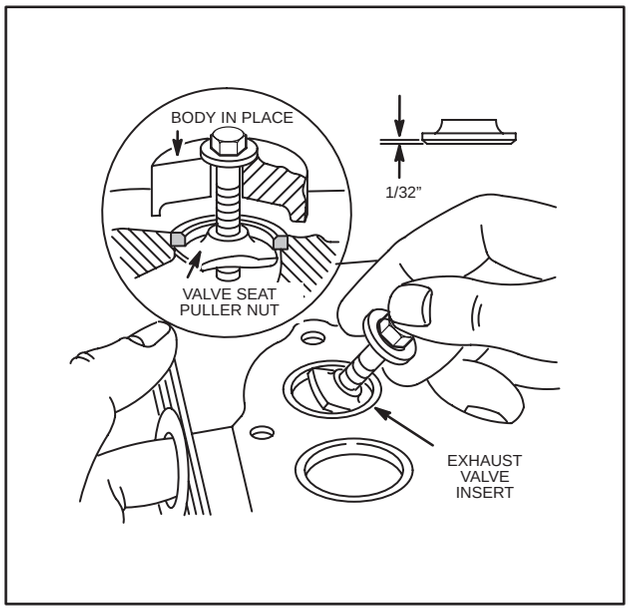

Fig. 523 – INSERTING VALVE SEAT PULLER

NOTE: On aluminum alloy cylinder models, it may be necessary to grind the puller nut until the edge is 1/32" thick in order to get the puller nut under the valve insert, Fig. 523.

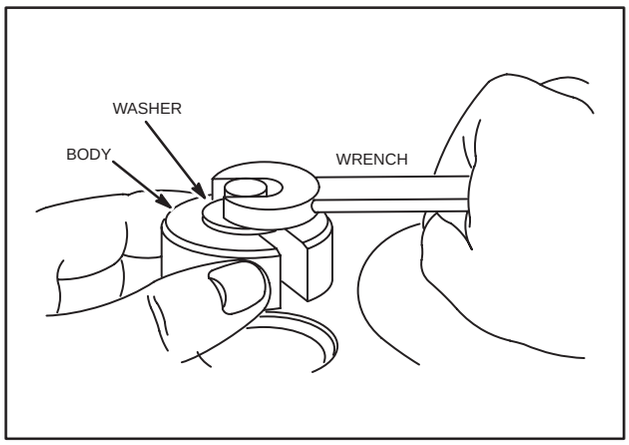

Fig. 524 – REMOVING VALVE SEAT

COMPRESSION (cont'd)

To Drive in New Valve Seat Insert

Select the proper valve seat insert and the correct pilot and driver according to Table No. 21. You will note that one side of the seat insert is chamfered at the outer edge. This side should go down into the cylinder.

Table No. 21
TOOLS FOR INSTALLING VALVE SEAT INSERTS

ENGINE MODEL	TOOLS		VALVE SEAT INSERT PART NO.		
	PILOT	DRIVER	INTAKE STANDARD	EXHAUST STANDARD	EXHAUST COBALITE
CAST IRON CYLINDERS					
A, FJ-1 & 2, H, L, M, S, T, Y, 9	19127	19136	63007 (NLA)	63007 (NLA)	
B, K, R, W, Z, ZZ, 14, 19, 23, 2000, 230000, 240000	19127	19136	21880	21880	691583
I, IBP, N, NS, U, WI, WM, WMB, WMI, WBG, WMG, 5, 6	19126	19136	63838 (NLA)	21865 (NLA)	
8	19126	19136	210135 (NLA)	21865 (NLA)	
ALUMINUM CYLINDERS					
6B, 8B	19126	19136	691702	691702	210452
60000, 80000	19126	19136	210879•♦ 691701•	691702	210452
82000, 92000, 940000, 95000, 110000	19126	19136	210879♦ 691701•	691702	210452
100200, 100900, 130000	19126	19136	691705	691701	691856
140000, 170000, 190000	19127	19136	691703	691703	691844■
220000, 250000	19127	19136		691703	691844

♦ 691702 used before Serial No. 5810060 – 210808 used from Serial No. 5810060 to No. 6012010.

• Use 210879 if seat is 1.097 O.D.; Use 691701 if seat is 1.079 O.D.

■ Before Code No. 7101260 replace cylinder.

Insert the pilot into the valve guide. Then drive the valve insert into place with the driver, as shown in Fig. 525. The seat should then be ground lightly and the valves and seat lapped lightly with grinding compound. Clean thoroughly.

WARNING: Wear eye protection when installing and removing valve springs

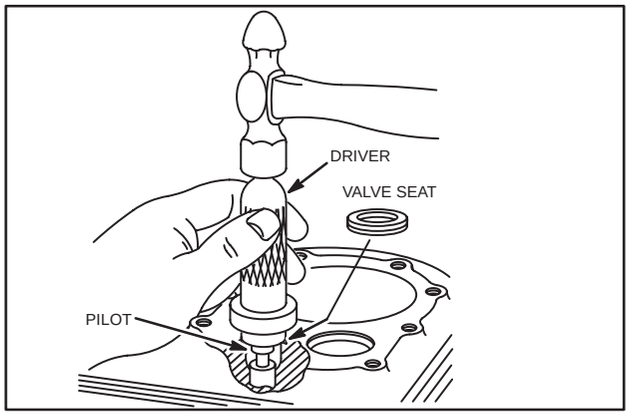

Fig. 525 – DRIVING IN VALVE SEAT

COMPRESSION (cont'd)

NOTE: Aluminum alloy cylinder models. Use the old insert as a spacer between the driver and the new insert. Drive new insert until it bottoms. Top of insert will be slightly below cylinder head gasket surface. Using a flat punch, peen around the insert as shown in Fig. 526.

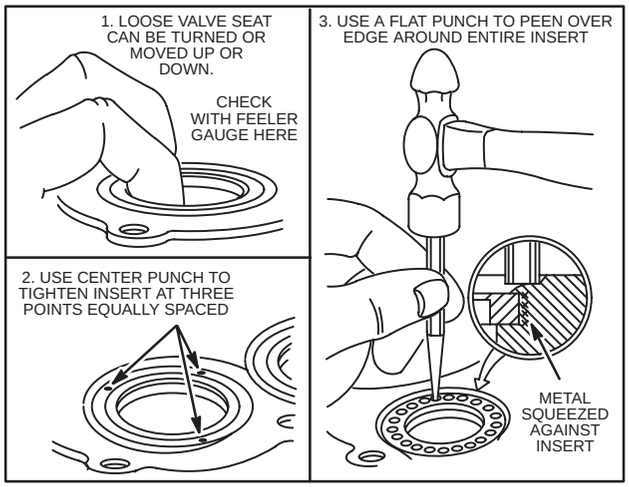

Fig. 526 – PEENING VALVE SEAT

NOTE: Replace cylinder if a .005" feeler gauge enters between valve seat and aluminum cylinder.

To Check Valve Guides

Use plug gauge to check valve guides holes for wear. See Table No. 22 for correct gauge to use on the various models. Try gauge in several positions as hole may be out of round. If gauge enters hole freely, a new valve guide must be installed.

Table No. 22
VALVE GUIDE PLUG GAUGE

ENGINE MODELS	TO CHECK VALVE GUIDE FOR WEAR OR OUT OF ROUND USE GAUGE NUMBER
A, B, FJ, H, K, L, M, Q, R, S, T, W, Y, Z, ZZ, 9, 14, 23	19151
IBP, N, NS, U, WM, I WI, WMB, WMI, 5, 6, 8	19122

To Remove Valve Guides

The valve guides in most models are pressed into place and can be removed when worn. In other models, the valve guides are not removable. They are drilled and reamed directly through the cylinder casting and the cylinder must be counter-bored to receive the replacement valve guide. Full instructions follow:

Engines with Removable Valve Guides

Press guide halfway into valve chamber with a 5/16" rod or punch, Fig. 527. Break off lower half, Fig. 528, and drive out remainder.

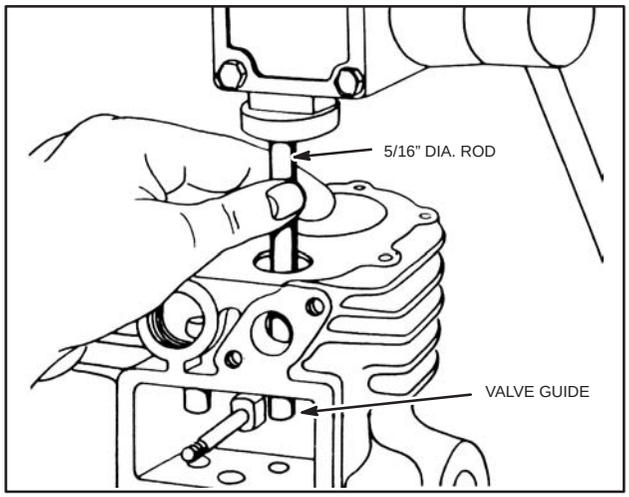

Fig. 527 – PRESSING VALVE GUIDE DOWN

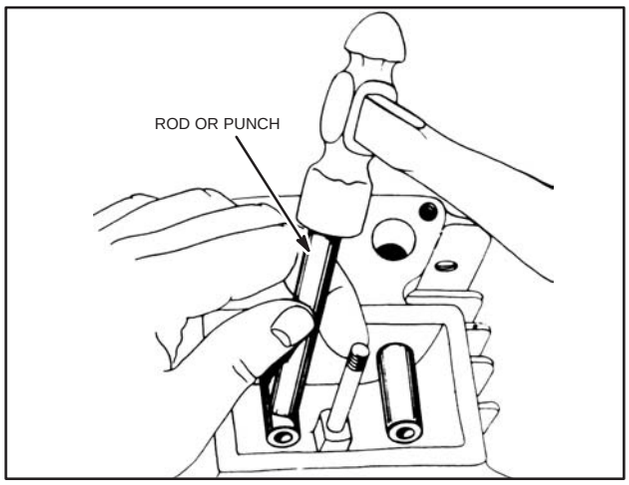

Fig. 528 – BREAKING OFF LOWER HALF

NOTE: If the guide is extremely tight on Models K, R, W, Z, ZZ, remove cylinder from crankcase and push valve guide out in an arbor press.

COMPRESSION (cont'd)

To Counterbore Hole for Valve Guide Engines without Removable Valve Guides

Counterboring should be done on a drill press so that pilot on counterbore can follow the guide and the hole will be square with the cylinder, Fig. 529. Counterbore should turn at a speed of 225 to 275 RPM. It may break through the sidewall, but sufficient stock will remain to hold the new guide securely. If counterbore cuts undersize so that the hole is too small for valve guide, ream the hole with counterbore reamer at not over 250 RPM., preferably inch by hand, Table No. 23. Proceed to install new valve guides as in the following instructions:

See Table No. 24 for valve guide part number.

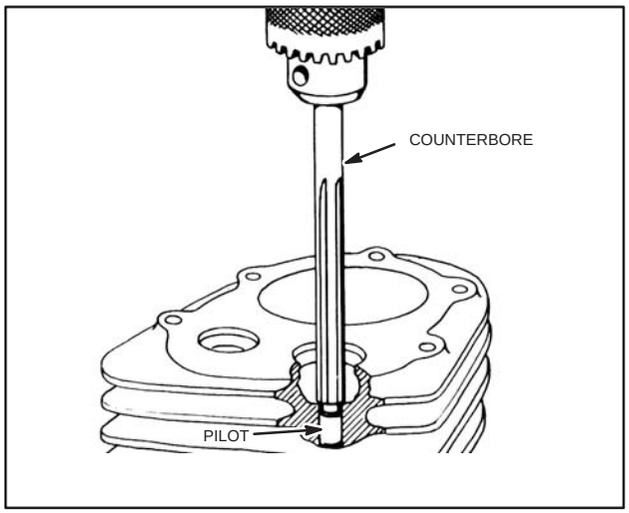

Fig. 529 – COUNTERBORING FOR VALVE GUIDE

WARNING: Wear eye protection when installing and removing valve springs

NOTE: The recommended speeds for operating drills and reamers produce best results. Lower speeds are permissible, but higher speeds may result in breakage or damage to tools. A reamer lubricated will cut slightly smaller than when used dry.

Table No. 23
VALVE GUIDE COUNTERBORES

Tool Name	N, NS, U, 5, 6, 8	B, K, Q, R, W, WA, Z, ZZ 14, 23
COUNTERBORE	19115	19128 (NLA)
COUNTERBORE BUSHING	19116 (NLA)	19134 (NLA)

Table No. 24
VALVE GUIDE PART #'s

ENGINE MODEL	VALVE GUIDES	
	INTAKE	EXHAUST
A	210102 (NLA)	210103 (NLA)
B	210101	210066 (NLA)
FJ	210102 (NLA)	210103 (NLA)
H, Y	210102 (NLA)	210102 (NLA)
I, IBP	210106 (NLA)	210107 (NLA)
K, W	210105 (NLA)	21846 (NLA)
L, M	210102 (NLA)	210103 (NLA)
N, NS, U	210124 (NLA)	210125 (NLA)
R	210105 (NLA)	21846 (NLA)
R (with non-removable guides)	210123 (NLA)	210123 (NLA)
S, T	210102 (NLA)	210103 (NLA)
W	210105 (NLA)	21846 (NLA)
W (with non-removable guides)	210123 (NLA)	210123 (NLA)
WI, WM, WMB, WMI	210106 (NLA)	210107 (NLA)
Z, ZZ	210105 (NLA)	21846 (NLA)
5	210106 (NLA)	210107 (NLA)
6	210124 (NLA)	210125 (NLA)
8	210124 (NLA)	210125 (NLA)
9	210100 (NLA)	210066 (NLA)
14	210100 (NLA)	210066 (NLA)
23	210101	210067

COMPRESSION (cont'd)

TO INSTALL VALVE GUIDES

The valve guides (see Table No. 24 for correct Part No.) are drilled and reamed to the finish size and need only be pressed into place. **USE A BRASS ROD TO PREVENT PEENING THE END OF THE GUIDE**. THE DISTANCE FROM THE TOP OF THE GUIDE TO THE TOP OF THE CYLINDER SHOULD BE AS IN Table No. 25, Fig. 530.

Table No. 25
DISTANCE FROM TOP OF GUIDE TO TOP OF CYLINDER

ENGINE MODEL	INTAKE	EXHAUST
A	1/2"	1"
B, K, Z, ZZ, 14	3/4"	1-1/4"
FJ-1 & 2, L, M S, T	1/2"	3/4"
H, Y	5/8"	17/32"
I, IBP, WM, WMB, WI, WMI, 5	1/2"	7/8"
N, NS, U, 6	5/8"	1"
R, W	3/4"	1"
8	23/32"	1"
9	23/32"	1-1/32"
23	1"	1-1/4"

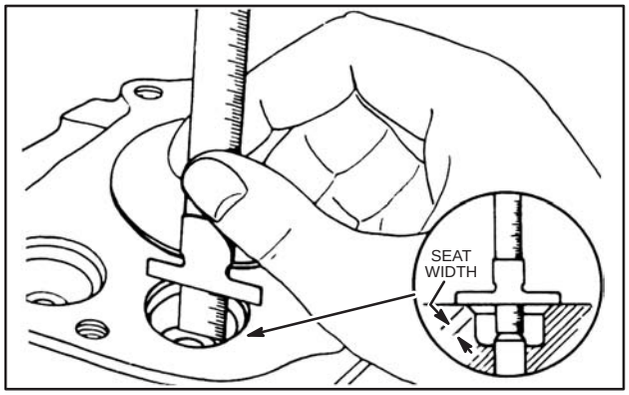

Fig. 530 – CHECKING VALVE GUIDE HEIGHT

To Reface Stellite Valves

Use the same valve refacing machine as used on standard valves.

To Grind Stellite Valve Seats

We highly recommend the use of the valve seat reconditioning kit supplied by Black & Decker Mfg. Co.

TO TIME VALVES

To properly time the valves, assemble the crankshaft so the timing mark on the collar of the crankshaft is in line with that on the cam gear, Fig's. 531 and 532.

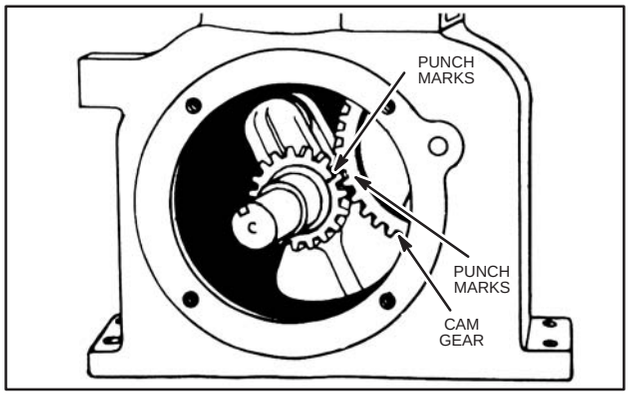

Fig. 531 – VALVE TIMING

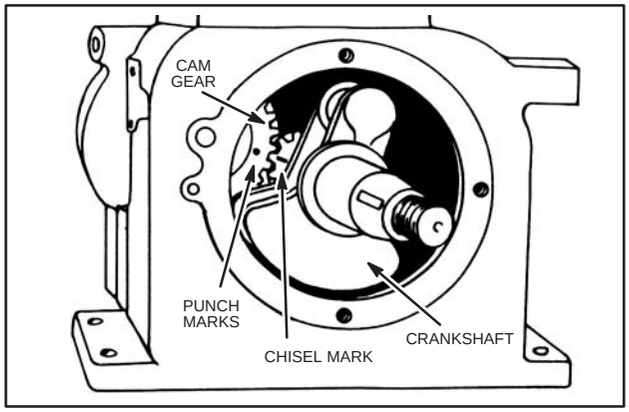

Fig. 532 – VALVE TIMING

If the timing on any of the gears is on the wrong side, mark the top or opposite end of the timing tooth with chalk. See exceptions on following page:

COMPRESSION (cont'd)

Valve Timing
Models P, PB

With the cam loose on the cam gear shaft and the cylinder in place temporarily, turn the crankshaft so the piston is at its highest point, Fig. 533. This can easily be found by placing a rod in the spark plug hole on top of the piston. It will rise as the piston rise and the highest point can then be noted. Scratch a mark on the flywheel and a corresponding one on the air guide.

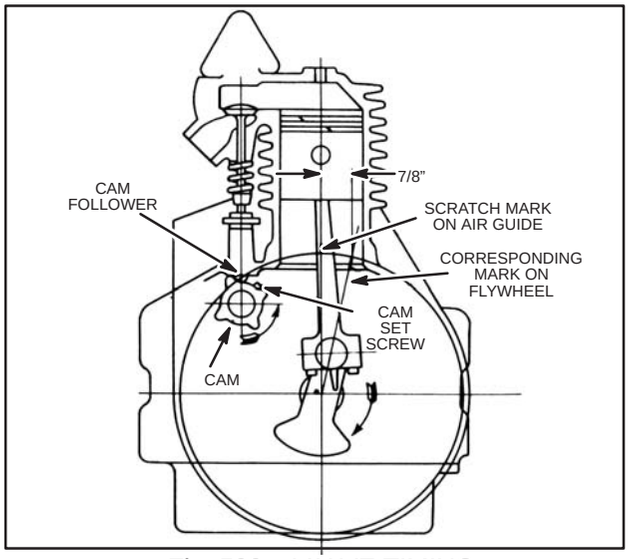

Fig. 533 – VALVE TIMING

Remove the cylinder. Turn cam (still loose on the gear shaft) until the lobe (which allows the set screw to be tightened through the piston hole) just strikes the cam follower on the left or forward side. Then turn cam slightly to the right to take up the play between the valve stem and valve tappet. See that the mark on the flywheel is on the air guide, then turn the flywheel to the right 7/8" and tighten the set screw on the cam. The engine is then correctly timed.

Valve Timing
Models F, FB, FC, FE, FG, FH, FHI, FI

To properly time the valves on these models, assemble cam followers in place, insert the exhaust valve push rod through the small hole in top of the crankcase so that the flat end of rod rest on the upper cam follower, Fig. 534. Then place the cam gear on its stud so that the cam lobe is toward the crankcase wall between the two (2) cam followers.

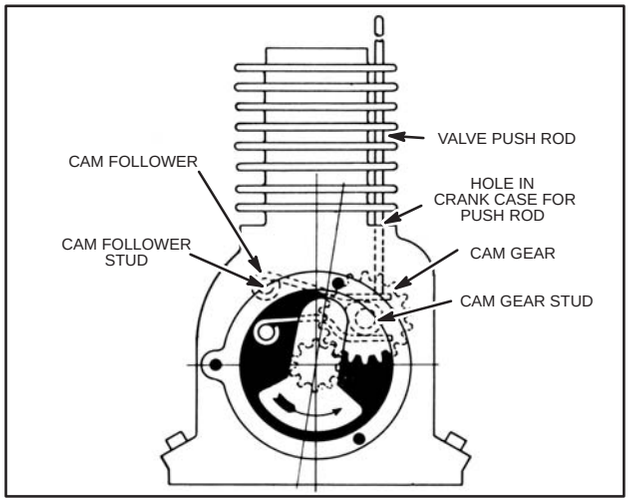

Fig. 534 – VALVE TIMING

Place finger on top of push rod and press lightly. Be careful not to bend rod and bind against the side of small hole in crankcase. Then rotate the cam gear to the right or clockwise several times until you become familiar with the point where push rod begins to rise. With the cam gear set in this position, insert crankshaft, gear end first and with crankpin 10° to the right of center line and almost in line with top magneto screw hole. Engine will then be in correct time.

Valve Conversions

The life of a valve is considered to be the period of time the valve will operate before repair or replacement is necessary. The life of a standard exhaust valve is often shortened because of burning, which occurs when pieces of combustion deposit lodge between the valve seat and valve face, preventing the valve from closing completely. This is most likely to occur on engines which are operated at constant speed and constant load, for long periods of time. Exhaust valve life can be extended by using:

0. A valve rotator turns the exhaust valve a slight bit on each lift, wiping away any deposits which tend to lodge between the valve face and seat, Table No. 28, Page 19 and Fig. 535 or,

A. A Cobalite™ exhaust valve which has a greater resistance to heat, Table No. 29, Page 20 or,

B. Or a combination of both the rotator and Cobalite™ valve, Table No. 30, Page 21 or,

C. For LP or Natural gas, use a Cobalite™ valve without rotator, see Table No's. 31 or 32, Pages 22 or 23, using Fig. 536 or Fig. 537 to determine type of retainer being used.

COMPRESSION (cont'd)

Table No. 26
VALVE SEAT INSERT AND COUNTERBORE TOOLS

BASIC MODEL SERIES	COUNTERBORE CUTTER	SHANK	CUTTER & DRIVER PILOT	INSERT DRIVER
ALUMINUM CYLINDER				
60000, 80000	NONE	NOT USED	19126	19136
90000	NONE	NOT USED	19126	19136
100000, 130000	NONE	NOT USED	19126	19136
170000, 190000	NONE	NOT USED	19127	19136
CAST IRON CYLINDER				
230000, 240000	19131	19129	19127	19136
300000, 320000	NONE	NOT USED	19127	19136

Table No. 27
VALVE TAPPET CLEARANCE

BASIC MODEL SERIES	INTAKE		EXHAUST	
ALUMINUM CYLINDER**	**MIN.**	**MAX.**	**MIN.**	**MAX.**
60000, 80000, 90000*, 100000, 110000, 120000	.005 (.13)	.007 (.18)	.007* (.18)*	.009* (.23)*
130000, 170000, 190000, 220000, 250000●	.005 (.13)	.007 (.18)	.009 (.23)	.011 (.28)
CAST IRON CYLINDER	**MIN.**	**MAX.**	**MIN.**	**MAX.**
230000, 240000, 300000, 320000	.007 (.18)	.009 (.23)	.017 (.43)	.019 (.48)

* Some Model Series System 2®, System 3®, System 4® have been built with .005 (.13 mm) to .007 (.18 mm) exhaust valve clearance. The breather on these engines are stamped on the inside surface.

● On Model Series 253400, 255400 engines equipped with **"both**" electric start and rewind start, set **VALVE TAPPET clearance** to "Rewind Start" specifications as listed in **TABLE NO. 27.** For **Electric Start ONLY** engines, set valve clearance to .009" (.23 mm) to .011" (.28 mm).

** Includes Cylinders with Cast Iron Sleeves

COMPRESSION (cont'd)

Table No. 28

TO CONVERT FROM STANDARD EXHAUST VALVE (WITHOUT ROTATOR) TO STANDARD EXHAUST VALVE WITH (ROTATOR)						
	REMOVE		ADD			
BASIC MODEL SERIES	SPRING	RETAINER	SPRING	ROTATOR	RETAINER	PIN
60000, 80000, 90200, 92000, 93000, 94000, 95000, 96000	26478	93312	26826	292259	230127	230126
100200, 100900, 130000	26478	93312	26826	292259	230127	230126
170000, 190000, 200000, 250000	Reuse	221596	26828	292260	91257	
CAST IRON CYLINDER						
230000	65906	Reuse	26828	292260	68283	
NOTE: Rotator is not to be used with LP fuel or natural gas.						

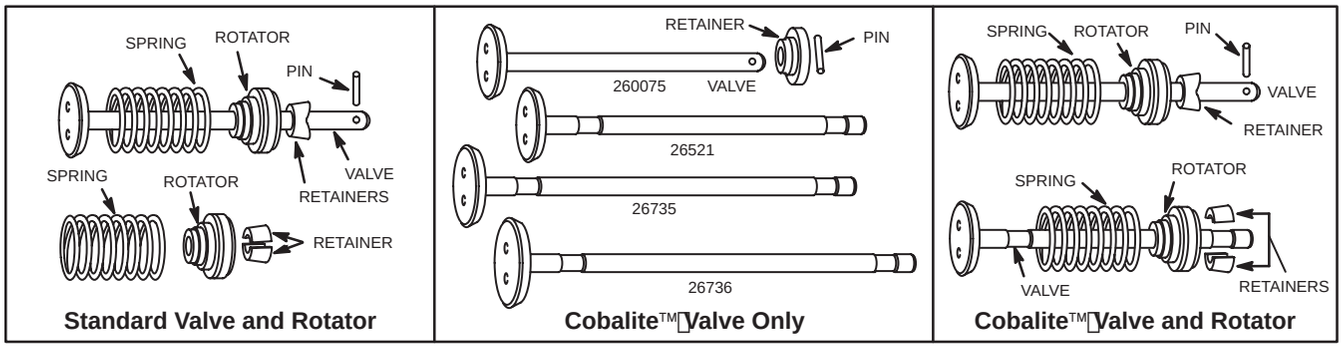

Standard Valve and Rotator | **Cobalite™ Valve Only** | **Cobalite™ Valve and Rotator**

Fig. 535

COMPRESSION (cont'd)

Table No. 29

TO CONVERT FROM STANDARD EXHAUST VALVE TO COBALITE™ EXHAUST VALVE (WITHOUT ROTATOR)								
	REMOVE			ADD				
Model Series	**Standard Exhaust Valve**	**Retainer or Rotator**	**Spring**	**Cobalite™ Exhaust Valve**	**Retainer Collar**	**Retainer**	**Spring**	**Pin**
60000▪ 80000▪ 90000▪	296676	93312	26478	262580		224450	26478	
100200▪ 100900▪ 130000▪	211119	93312	26478	262464		224450	26478	Not Used
170000•▪ 190000•▪	390419	Reuse Split Retainers (93630)	Reuse Spring (26828)	390420	68293	Reuse Split Retainers (93630)	Reuse Spring (26828)	Not Used
220400* 221400* 250000*		**Cobalite™ Exhaust Valve and Seat with Rotator Standard**						
		292260	Reuse Spring (26828)	Reuse 261185	68293	Reuse Split Retainers (93630)	Reuse Spring (26828)	Not Used
233000	394434	68293 (Collar Type)	65906	394436 Includes Retainers	68293	Reuse Split Retainers (68283)	26828	Not Used
243000* 300000* 320000*		**Cobalite™ Exhaust Valve and Seat with Rotator Standard**						
		Reuse Split Retainers (93630)	Reuse Spring (26828)	Reuse 394436	68293	Reuse Split Retainers (93630)	Reuse Spring (26828)	Not Used

▪ Some standard with Cobalite™ exhaust valve and seat with Rotator. Cobalite™ valves are usually marked "TXS," "XS" or "PP-XS" on head.

• Valve Rotator standard with standard exhaust valve.

* Standard with Cobalite™ exhaust valve and seat with Rotator.

NOTE: Apply Briggs & Stratton "Valve Guide Lubricant," Part #93963 to valve stems and guides before installing valves especially when operating with LP fuel or natural gas. Rotator should not be used with LP fuel or natural gas.

COMPRESSION (cont'd)

Table No. 30

TO CONVERT FROM STANDARD EXHAUST VALVE TO COBALITE™ EXHAUST VALVE (WITH ROTATOR)								
	REMOVE			ADD				
Model Series	**Standard Exhaust Valve**	**Retainer**	**Spring**	**Cobalite™ Exhaust Valve**	**Rotator**	**Retainer**	**Spring**	**Pin**
60000▪ 80000▪ 90000▪	296676	93312	26478	494187	292259	230127 (Sleeve Type)	26826	230126
110000▪	212004 or 261913	93312	Reuse 260552	261912	292259	230127 (Sleeve Type)	Reuse 260552	230126
100200▪ 100900▪ 130000▪	211119	93312	26478	494191	Part of 494191		Part of 494191	Not Used
170000•▪ 190000•▪	390419	Reuse Split Retainers (93630)	Reuse Spring (26828)	390420	Reuse Rotator (292260)	Reuse Split Retainers (93630)	Reuse Spring (26828)	Not Used
220400* 221400* 250000*	**Cobalite™ Exhaust Valve and Seat with Rotator Standard**							
233000	23923	69293 (Collar Type)	65906	394436 Includes Retainers	292260	Reuse Split Retainers (68283)	26828	Not Used
243000* 300000* 320000*	**Cobalite™ Exhaust Valve and Seat with Rotator Standard**							

▪ Some standard with Cobalite™ exhaust valve and seat with Rotator. Cobalite™ valves are usually marked "TXS," "XS" or "PP-XS" on head.

• Valve Rotator standard with standard exhaust valve.

* Standard with Cobalite™ exhaust valve and seat with Rotator.

NOTE: Apply Briggs & Stratton "Valve Guide Lubricant," Part #93963 to valve stems and guides before installing valves especially when operating with LP fuel or natural gas. Rotator should not be used with LP fuel or natural gas.

COMPRESSION (cont'd)

Table No. 31

TO CONVERT FROM COBALITE™ EXHAUST VALVE (WITH ROTATOR AND PIN OR SPLIT RETAINERS) TO COBALITE™ EXHAUST VALVE (WITHOUT ROTATOR)							
	REMOVE				ADD		
Model Series	**Rotator**	**Retainer**	**Spring**	**Pin**	**Retainer**	**Spring**	**Pin**
60000▪ 80000▪ 90000▪	292259	230127 (Sleeve Type)	26826	230126	23184 (Collar Type)	26478	23187
110000▪	292259	230127 (Sleeve Type)	Reuse Spring (260552)	230126	23184 (Collar Type)	Reuse Spring (260552)	23187
100200▪ 100900▪ 130000▪	292259	230127 (Sleeve Type)	26826	230126	23184 (Collar Type)	26478	23187
170000•▪ 190000•▪	292260	Reuse Split Retainers (93630)	Reuse Spring (26828)	Not Used	68293 (Collar Type)	Reuse Spring (26828)	Not Used
220400* 221400* 250000*	292260	Reuse Split Retainers (93630)	Reuse Spring (26828)	Not Used	68293 (Collar Type)	Reuse Spring (26828)	Not Used
233000	292260	Reuse Split Retainers (68283)	26826	Not Used	68293 (Collar Type)	65906	Not Used
243000* 300000* 320000*	292260	Reuse Split Retainers (68283)	26826	Not Used	68293 (Collar Type)	65906	Not Used

▪ Some standard with Cobalite™ exhaust valve and seat with Rotator. Cobalite™ valves are usually marked "TXS," "XS" or "PP-XS" on head.

• Valve Rotator standard with standard exhaust valve, not to be used with LP fuel or natural gas.

* Standard with Cobalite™ exhaust valve and seat with Rotator.

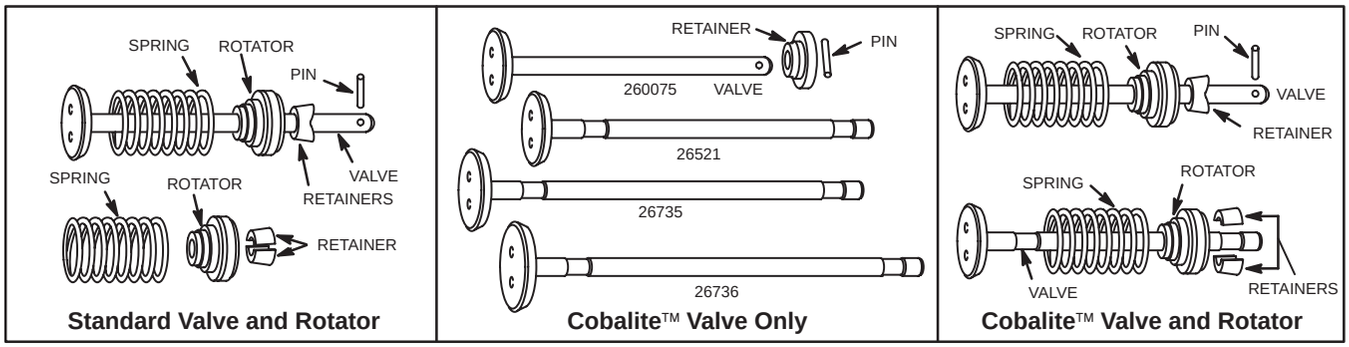

Fig. 536

COMPRESSION (cont'd)

Table No. 32

TO CONVERT FROM COBALITE™ EXHAUST VALVE (WITH KEYHOLE ROTATOR) TO COBALITE™ EXHAUST VALVE (WITHOUT ROTATOR)							
	REMOVE				ADD		
Model Series	Rotator	Retainer	Spring	Pin	Retainer	Spring	Pin
60000▪ 80000▪ 90000▪	491442	Not Used	262750	Not Used	224450	26478	Not Used
110000▪	491442	Not Used	262750	Not Used	224450	26478	Not Used
100200▪ 100900▪ 130000▪	491442	Not Used	262750	Not Used	224450	26478	Not Used

▪ Some standard with Cobalite™ exhaust valve and seat with Rotator. Cobalite™ valves are usually marked "TXS," "XS" or "PP-XS" on head.

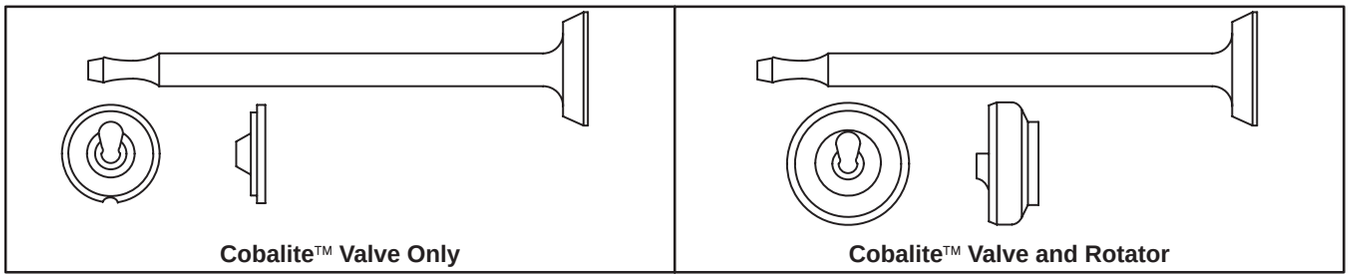

Fig. 537

Section 5
PISTONS, RINGS, CONNECTING RODS

The sizes of bearing surfaces of these parts are important and may be compared with sizes shown in Table No's. 35 & 36. However, parts apparently in good condition may require checking for size or roundness. Example: A rod bearing .0007" out of round should be rejected

Always keep in mind the condition of related parts. If, for example, the cylinder is to be rebored, new rings and pistons are required and there is no need to check the old ones.

To Remove Piston and Connecting Rod

To remove piston and connecting rod from engine, bend down rod lock, when used, Fig. 538. Connecting rods without locks use one or two thin washers instead of locks. On connecting rods with dippers held by both connecting rod bolts, no washers or rod locks are used.

Remove connecting rod cap. Remove any carbon or ridge at top of cylinder bore to prevent ring breakage on cast iron sleeves or cast iron cylinders. The ridge does not have to be removed on aluminum cylinder bores. Push piston and rod out thru top of cylinder.

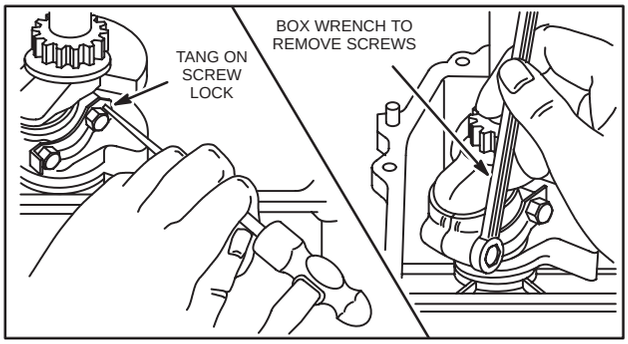

Fig. 538 – BENDING ROD LOCK

Pistons used in SLEEVE BORE aluminum alloy engines are stamped with the letter "L," Fig. 539, Ill. 1. These pistons **CANNOT BE USED** in Kool-Bore® (aluminum bore) engines.

Pistons used in Kool-Bore® (aluminum bore) engines are chrome plated. These chrome plated pistons **CANNOT BE USED** in SLEEVE BORE engines, Fig. 539, Ill. 2.

NOTE: Piston for cast iron sleeve and cast iron cylinders were stamped with either an "L" or "S" for identification. Pistons that were chrome plated are discolored at the piston pin bore.

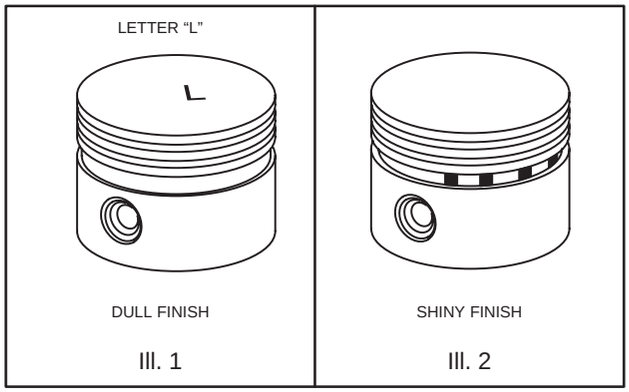

Fig. 539 – PISTON VARIATIONS

To Remove Connecting Rod

To remove connecting rod from piston, remove piston pin lock with thin needle nose pliers. One end of pin is drilled to facilitate removal of lock on smaller engines, Fig. 540. Larger engines had hollow piston pins.

NOTE: When piston pin sticks in piston pin bore, soak piston and pin in boiling water to loosen piston pin.

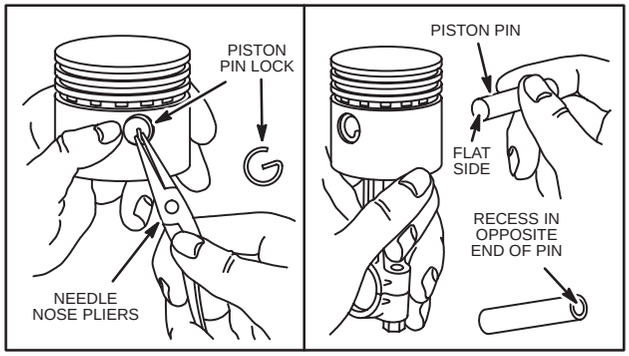

Fig. 540 – REMOVING ROD

PISTONS, PINS, CONNECTING RODS (cont'd)

To Remove Piston Rings

Remove piston rings using Tool #19340, Piston Ring Expander, Fig. 541.

NOTE: Some oil control rings consist of two thin steel rails and a spring expander. These steel rails cannot be removed with Tool #19340, Piston Ring Expander. Grasp one end of the steel rail and wind the rail from the oil ring groove into the center ring groove. Repeat into the top ring groove and off the piston. Repeat for second rail and expander.

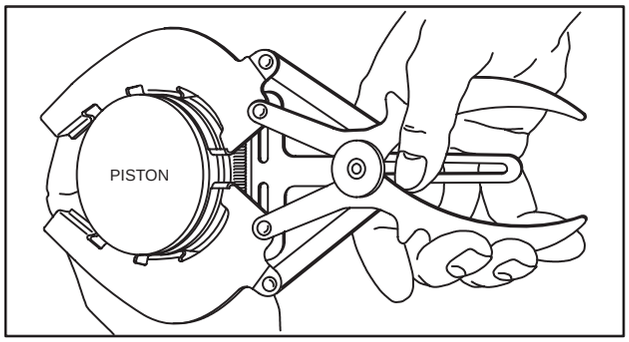

Fig. 541 – REMOVING RINGS

To Check Piston

If cylinder is to be resized, there is no reason to check the piston, since a new oversized piston assembly must be used.

If, however, the cylinder is not to be resized, the piston should be checked for signs of wear or scoring before re-use. Replace piston if worn or scored.

To Check Piston Ring Land Wear

To do so, clean carbon from top ring groove. Place a NEW ring in the groove and measure the space between the ring and the ring land. If a feeler gauge, per Table No. 33, can be inserted, the piston is worn and should be replaced, Fig. 542.

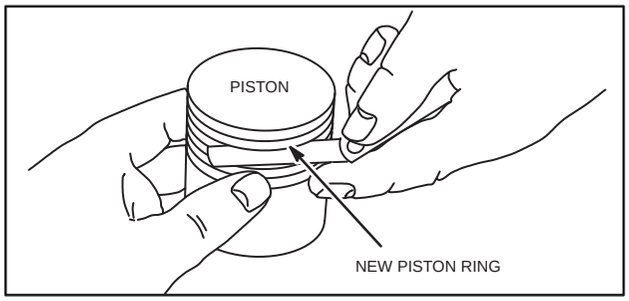

Fig. 542 – CHECKING RING GROOVES

Table No. 33
Feeler Gauge Selection

Model Series	Feeler Gauge Thickness
Alpha-Numeric Models I, N, NS, U, WI, WM, WMB	.007"
Numeric-Alpha Models 5, 5S, 6, 6S, 8	
Numeric Models 60000, 80000, 92000, 100000, 110000, 130000	
Alpha-Numeric Models A, B, D, F, FH, FJ, H, L, M, P, S, SD, T, W, Y, Z	.009"
Numeric-Alpha Models 9, 14, 23	
Numeric Models 140000, 170000, 190000, 200000, 230000, 240000, 250000, 300000, 320000	

NOTE: Some pistons for cast iron engines have four (4) grooves. The top groove, in this case, is not used for a piston ring. It is a Heat Insulating Groove or Heat Dam.

To Check Piston Ring End Gaps

To check rings, first clean all carbon from the ends of the rings and from the cylinder bore. Insert old rings one at a time 1" down into the cylinder. Check gap with feeler gauge, Fig. 543. If ring gap is greater than shown in Table No. 34, the ring should be rejected.

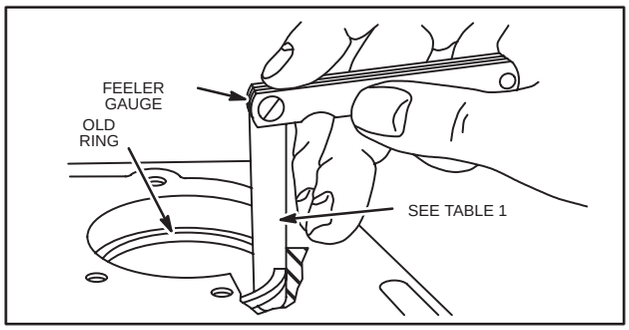

Fig. 543 – CHECKING RING GAP

Table No. 34
Ring End Gap Reject Size

	Compression Rings	Oil Ring
Aluminum Cylinder Bores	.035"	.045"
Cast Iron Sleeve and Cylinder Bores	.030"	.035"

NOTE: Do not deglaze cylinder walls when installing piston rings in aluminum cylinder engines.

PISTONS, PINS, CONNECTING RODS (cont'd)

Chrome Rings

Chrome ring sets are available for most current aluminum and cast iron cylinder models, no honing or deglazing is required. The cylinder bore can be "worn to" a maximum of .005" oversize when using chrome rings. See Service Bulletin 479 or Engine Parts List.

To Check Connecting Rod

If the crankpin bearing in the rod is scored, the rod must be replaced. Rejection sizes of crankpin bearing hole and piston pin bearing hole are shown in Table No. 35. Pistons pins .005" oversize are available in case the connecting rod and piston are worn at the piston pin bearing. If parts do not clean up at .005" oversize, they should be discarded. If, however, the crankpin bearing in the connecting rod is worn, Table No. 35, the rod should be replaced. Do not attempt to "file" or "fit" the rod.

Steel connecting rods have a removable bushing for the piston pin. This can be removed and a new one (1) pressed in and reamed to size.

Table No. 35
Connecting Rod Reject Size

Basic Model Series	Crank Pin Bearing	Piston Pin Bearing
Aluminum Cylinder		
6B, 60000	.876"	.492"
8B, 80000	1.001"	.492"
82000, 92000, 110000	1.001"	.492"
100200, 100900	1.001"	.555"
130000	1.001"	.492"
140000, 170000	1.095"	.674"
190000	1.127"	.674"
220000, 250000	1.252"	.802"
Cast Iron Cylinder		
I, N, U, WI, WM, WMB, 5, 6, 8	.751"	.492"
A, D, F, FH, FJ, H, L, M, P, S, SD, T, Y, 9	.876"	.563"
Q	1.001"	.616"
B, 14, 19, 190000	1.001"	.674"
K, R, W, Z, ZZ	1.001"	.736"
200000	1.127"	.674"
23, 230000	1.189"	.736"
240000	1.314"	.674"
300000, 320000	1.314"	.802"

IF THE PISTON PIN IS WORN .0005" OUT OF ROUND OR BELOW THE REJECTION SIZES LISTED IN TABLE NO. 36 BELOW, IT SHOULD BE REPLACED.

Table No. 36
Piston Pin Reject Sizes

Aluminum Cylinder	Piston Pin O.D.	Pin Bore I.D.
6B, 8B, 60000, 80000, 82000, 92000, 110000	.489"	.491"
100200, 100900	.552"	.554"
130000	.489"	.491"
140000, 170000, 190000	.671"	.673"
220000, 250000	.799"	.801"
Cast Iron Cylinder		
I, N, NS, U, WI, WM, WMB, N, 5, 6, 8	.489"	.491"
A, D, F, FH, FJ, H, L, P, S, SD, T, Y, 9	.561"	.563"
B, 14, 19, 190000, 200000	.671"	.673"
K, R, W, WA, Z, ZZ, 23, 230000	.734"	.736"
240000	.671"	.673"
300000, 320000	.799"	.801"

BE SURE ALL PARTS ARE CLEAN WHEN ASSEMBLED. A TINY BIT OF DIRT WILL RUIN A BEARING IN A FEW REVOLUTIONS.

To Assemble Piston and Connecting Rod

There are several things to keep in mind while assembling the rod, piston, piston pin, and rings to each other and while installing them in the engine. These operations are quite simple but may cause damage if not done properly:

1. Arrangement of rings on piston.
2. Position of piston in cylinder.
3. Position of rod in crankcase.
4. Alignment of rod and piston.
5. Proper installation into engine.

To Assemble Piston, with "X" on Piston Pin Boss, and Connecting Rod

Piston pins are a push-fit in piston and connecting rod. Some pistons use a piston pin with one end flat and the other end drilled. All other pistons use a hollow piston pin.

PISTONS, PINS, CONNECTING RODS (cont'd)

The position of the piston in the cylinder is determined by an "X" mark inside the piston on the pin boss, Fig. 544. The "X" side should go toward the magneto side of the engine. If the piston has no "X" see **"Piston Without Notch on Head or "X" on Piston Pin Boss,"** page 4. The position of the rod in the crankcase is determined by the clearance flat, the oil hole, or the assembly marks. It is important that the rod be properly installed in order to insure clearance and sufficient lubrication. Refer to Fig. 545 for proper installation of various rods. The side of the rod which is shown is the magneto side. The rod and piston must be assembled with the magneto sides in line.

NOTE: Use a thin needle nose pliers to assemble pin lock rings. Be sure the locks are set firmly in the grooves.

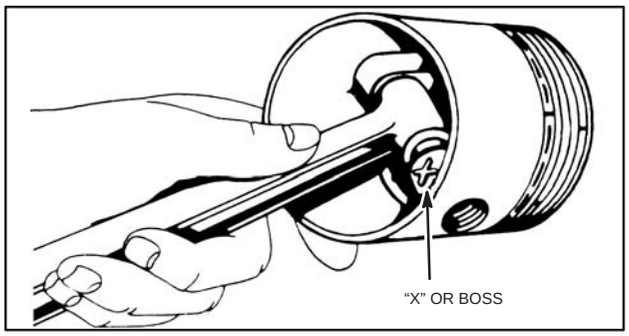

Fig. 544 – ASSEMBLING CONNECTING ROD

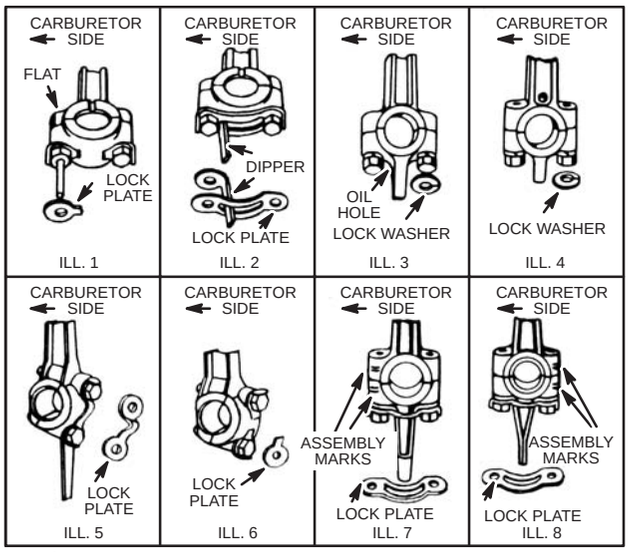

Fig. 545 – CONNECTING ROD INSTALLATION

Piston Without Notch on Head or "X" on Piston Pin Boss

Install one piston pin lock in piston pin bore groove. Place rod inside piston and slide piston pin into piston from side opposite lock thru piston and rod until pin seats on lock. Install second piston pin lock.

Piston With Notch on Head

The notch on the piston faces toward the magneto side of the engine. Install one pin lock in pin bore groove on side opposite notch.

On all pistons (with notch on head) except Model Series 300000, 320000 place rod in piston with offset rod cap to left side of piston, Fig. 546. Push piston pin from notch side of piston through piston and rod until pin seats on lock. Install second piston pin lock, (when used) Fig. 546.

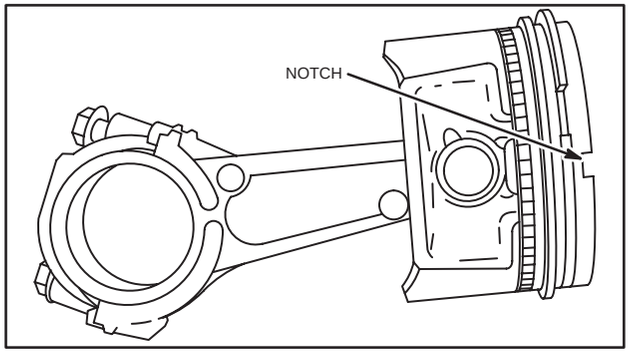

Fig. 546 – ASSEMBLING PISTON AND ROD

Model Series 300000, 320000 have a notch and a letter "F" on piston. Install pin lock in pin bore groove opposite the notch and letter "F." Place rod in piston with assembly marks on same side as notch and letter "F" on piston. Install pin through piston and rod until pin seats on lock. Install second lock, Fig. 547.

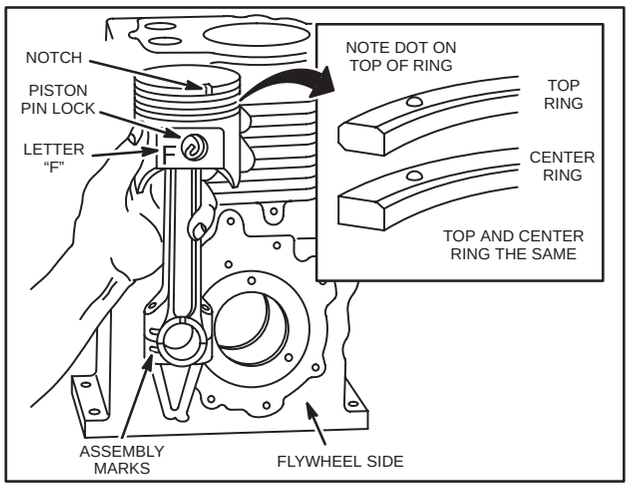

Fig. 547 – ASSEMBLING PISTON AND ROD

PISTONS, PINS, CONNECTING RODS (cont'd)

The following information regarding Testing for Squareness and Twist applies only to Alpha-Numeric Model Series

To Align Rod and Piston

In order for the piston and rings to function properly they must be in alignment with the cylinder bore and square with the crankshaft. Use Piston and Squareness Gauge, Tool #19143 (obs.), to test for squareness and twist.

To Test for Squareness

Select proper alignment plug, Table No. 37, and assemble crankpin end or rod to plug. Tighten cap screws so rod will fit securely on plug. Move piston and rod until piston is in center of aligning plate and note how piston skirt touches plate. Reverse rod on alignment plug to check opposite side of piston skirt against plate. If rod and piston are square the piston skirt, from bottom of skirt to bottom of oil ring groove, will touch the alignment plate evenly on each side.

Table No. 37
ROD ALIGNING PLUGS

ENGINE MODEL	USE PLUG NO.
A, F, FH, FI, FJ, H, L, M, P, S, T, Y	19144
B, K, Q, R, W, Z, ZZ	19145
I, N, U, WI, WM, WMB	19146
5, 6, 8	19146
9	19144
14	19145
23	19144

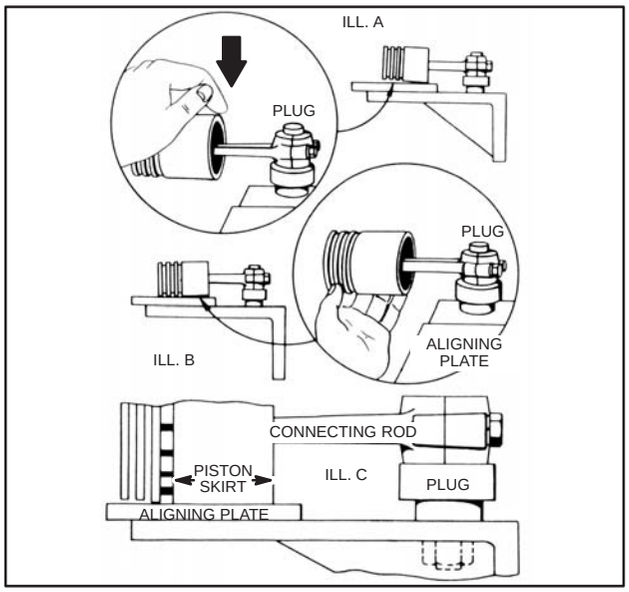

Fig. 548 – ALIGNING ROD AND PISTON

NOTE: On some pistons the skirt is ground tapered. In such cases there will be a slight space at oil ring end of skirt. This space must be equal on both sides in order to have the piston and rod in perfect alignment. If skirt does not touch plate evenly, bend rod by tapping with palm of hand as shown in Fig. 548, Ill. A or B whichever is indicated.

To Test for Twist

Place piston in position shown in Fig. 549, Ill. A and see if piston touches alignment plate evenly.

Place piston in position shown in Fig. 549, Ill. B and see if piston skirt touches aligning plate evenly. If skirt does not touch evenly, swing piston away from plate and twist rod with adjustable wrench as shown in, Fig. 549, Ill. B.

Replace rod against plate to recheck. If rod is properly aligned, the piston skirt will touch evenly in all directions as shown in Fig. 549, Ill. C. Remember that tapered piston will have a small space at the ring end of skirt in all positions. the Piston and Squareness Gauge should be so place that it will be between the operator and a window or light. this will make gauging the space between alignment plate and piston skirt much simpler.

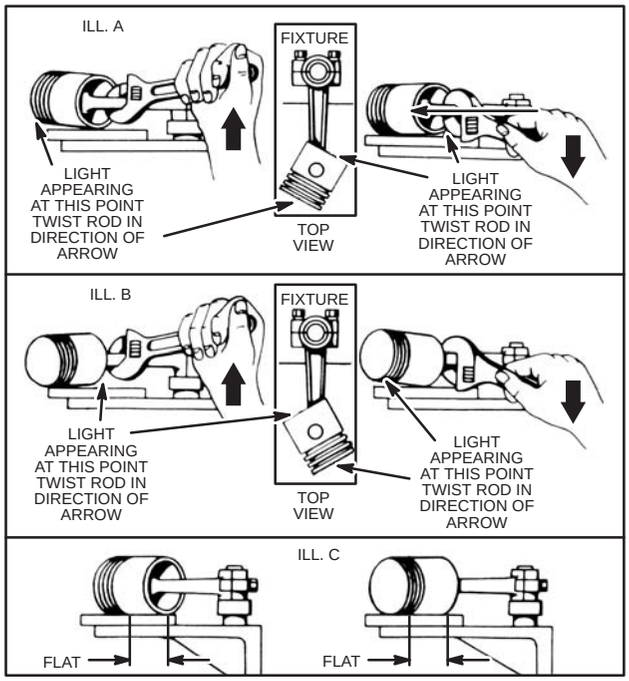

Fig. 549 – SQUARING PISTON AND ROD

PISTONS, PINS, CONNECTING RODS (cont'd)

To Assemble Rings to Pistons Alpha-Numeric Models

There are usually three different rings to a piston: (1) Top compression ring, (2) Center compression ring and (3) Oil ring.

The various rings and the proper position of each, are shown In Fig. 550. Note especially the center compression ring. The wiper groove should always be down toward the piston skirt.

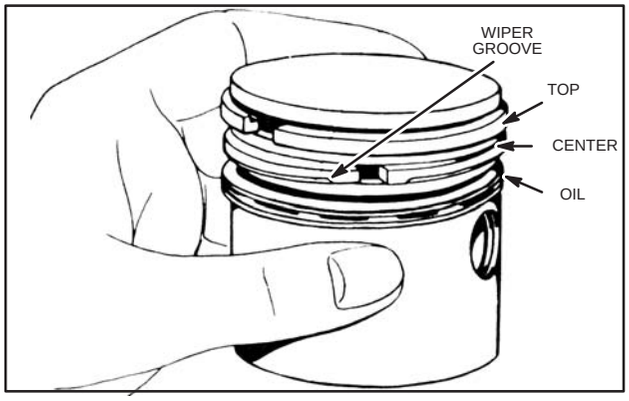

Fig. 550 – POSITION OF RINGS

Be sure the oil return holes are clean and carbon is removed from all grooves, then assemble rings, oil ring first.

NOTE: Be sure to use rings called for in "Illustrated Parts List" for 5 digit type number Model A engines. The ring grooves in old style pistons are not deep enough and require a thinner ring. See "Illustrated Parts List." However, if the old style piston has been replace by a new style piston, the new style ring can be used. Be sure to use the proper rings on Models 14, 23, B, Z, ZZ, as both 1/8" and 3/32" rings are used.

To Install Piston Rings on Piston, Numeric-Alpha and Numeric Models

Install oil control ring first, then center compression ring and top compression ring last, as shown in Fig's. 551 and 552. Use Tool #19340, Piston Ring Expander. Install expander under oil control ring, when so equipped, Fig's. 551 and 552. See Note above for Model Series B, Z, ZZ, 14, 23 piston rings.

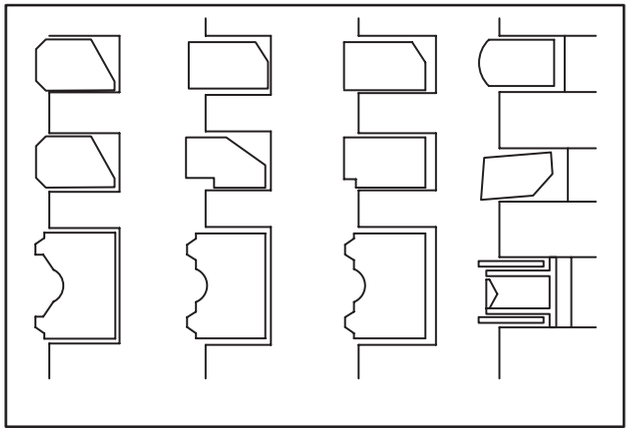

Fig. 551 – ALUMINUM BORE RINGS

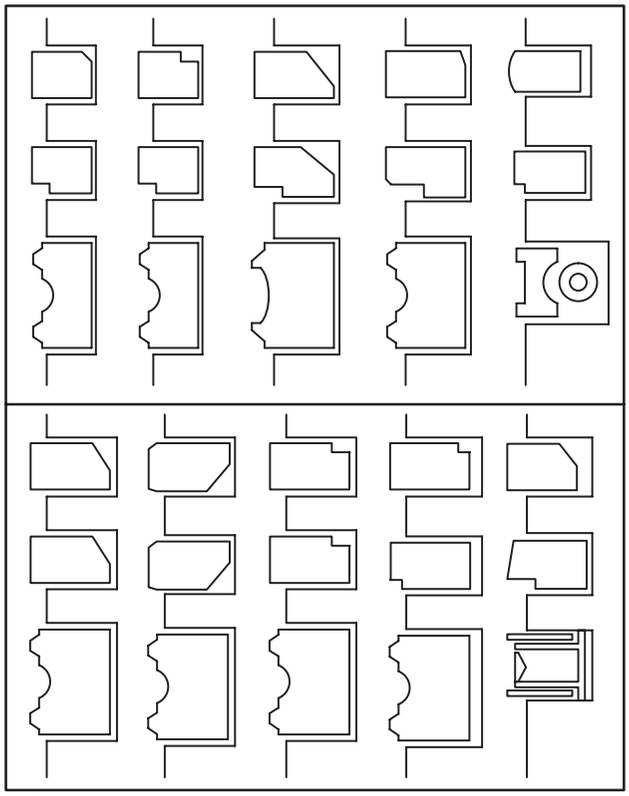

Fig. 552 – CAST IRON SLEEVE AND CAST IRON CYLINDER

PISTONS, PINS, CONNECTING RODS (cont'd)

To Compress Piston Rings

Oil piston rings and piston skirt. Select ring compressor from Table No. 38 and compress rings. On aluminum bore engines, use ring compressor as shown, Fig. 553, Ill. 2. On cast iron sleeve and cast iron cylinder engines, use compressor as shown, Fig. 553, Ill. 1.

Table No. 38
Ring Compressor Selection

Model Series	Tool #
Alpha Numeric A, B, D, F, FH, FJ, H, I, L, M, N, NS, P, S, SD, T, WI, WM, WMB, Y, U	19070
Numeric Alpha 5, 5S, 6, 6B, 6S, 8, 8B, 9, 14	
Numeric 60000, 80000, 920000, 100000, 110000, 130000	
Alpha Numeric K, Q, R, W, Z, ZZ	19230
Numeric 140000, 170000, 190000, 200000, 220000, 230000, 240000, 250000, 300000, 320000	

Place piston and compressor upside down on bench and push piston down until head of piston is even with edge of compressor. Tighten compressor until piston cannot be turned in compressor. Then loosen compressor until piston can be turned with slight resistance.

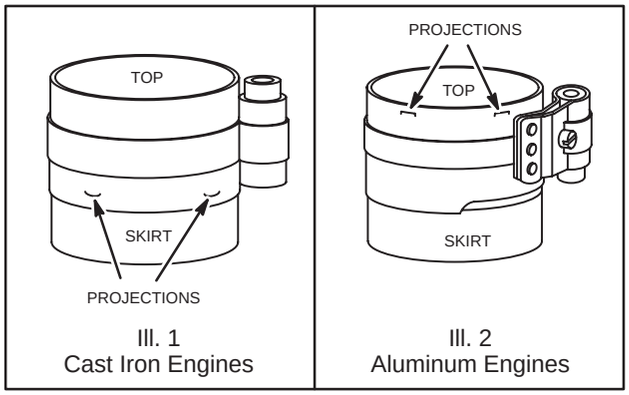

Ill. 1
Cast Iron Engines

Ill. 2
Aluminum Engines

Fig. 553 – RING COMPRESSOR USE

DO NOT ATTEMPT TO INSTALL PISTON AND RING ASSEMBLY WITHOUT USING A RING COMPRESSOR, SUCH AS TOOL #19070 OR #19230.

To Install Piston and Rod Assembly in Cylinder (Piston Without Notch On Head)

Place connecting rod and piston assembly with compressed rings into cylinder bore. Position rod so correct side is facing cam gear and turn crankshaft until crankpin is at top dead center, Fig. 554.

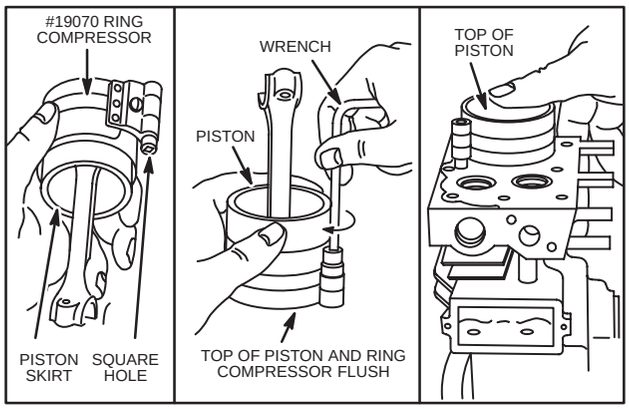

Fig. 554 – INSTALLING PISTON ASSEMBLY

Assemble connecting rod screw, rod lock (when used), and dipper (when used). Torque screws with Tool #19197 or #19393, Torque Wrench, to specifications listed in Table No. 39.

To Install Piston and Connecting Rod in Cylinder (Piston With Notch On Head)

Place rod and piston assembly with compressed rings into cylinder bore with notch on piston facing magneto side of engine. Turn crankshaft until crankpin is at top dead center, Fig. 554. Place shop rag over piston and ring compressor to protect hands. Push piston down by hand until rod rests on crankpin. Oil crankpin and install rod cap with match marks aligned, Fig. 556.

Assemble connecting rod screw, rod lock (when supplied), and dipper (when required). Torque screws with Tool #19197 or 19393, Torque Wrench, to specifications listed in Table No. 39, Page 8.

PISTONS, RINGS, CONNECTING RODS (cont'd)

After piston is entirely in the cylinder, invert engine or lay it on its side. Pull rod down and fit rod bearing to crankpin. Assemble cap to rod taking care that assembly marks come together. Tighten cap screws securely to the torque shown in Table No. 39. Revolve crankshaft at least two (2) revolutions. If rod strikes cam, assembly instructions have not been followed or the engine is out of time. If crankshaft operates freely, bend lock plate or rod lock against screw heads as shown in Fig's. 545, 555 or 556. See Fig. 557 for general view of rod assembly with oil dipper.

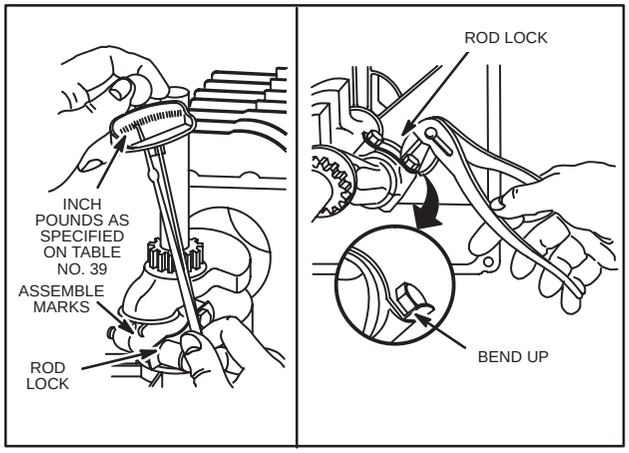

Fig. 555 – BENDING ROD LOCKS

NOTE: Some service rods are shipped with two thick washers under screw heads. Remove and discard these washers. Rods not using rod locks use one, two or no thin washers. Use two thin washers when no dipper is used. Use one thin washer when dipper is held by one screw under screw not holding dipper. No washers are required when dipper is held by both screws.

Table No. 39
Connecting Rod Screw Torque

BASIC MODEL SERIES	TORQUE
Aluminum Cylinders	
6B, 8B, 60000, 80000, 82000, 90000, 100000, 110000, 130000	100 in. lbs.
140000, 170000	165 in. lbs.
190000, 220000, 250000	185 in. lbs.
Cast Iron Cylinders	
I, N, U, WI, WM, WMB, 5, 6, 8	100 in. lbs.
A, 9	140 in. lbs.
B, 14	190 in. lbs.
Z, ZZ, 19, 23, 190000, 200000, 230000, 240000, 300000, 32000**0**	190 in. lbs.

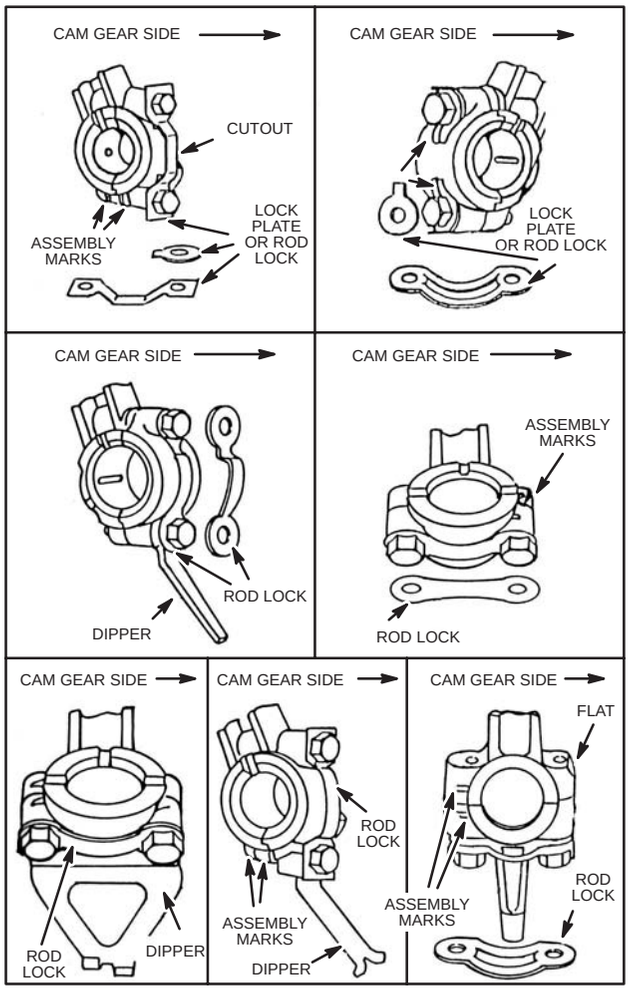

Fig. 556 – CONNECTING ROD INSTALLATION

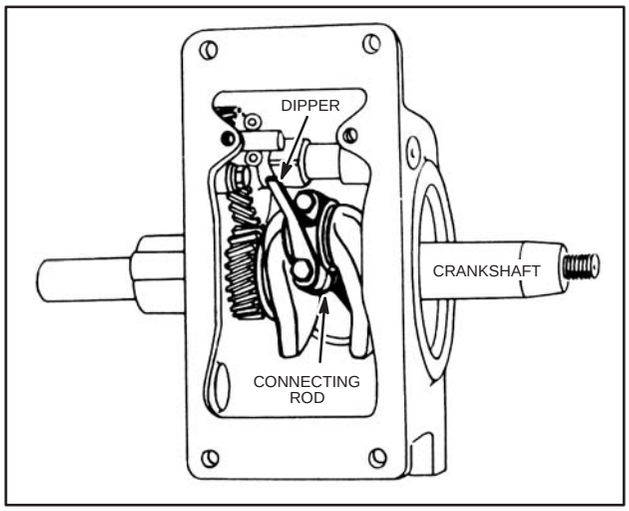

Fig. 557 – GENERAL VIEW OF ROD ASSEMBLY

Section 6
OIL SYSTEMS

Briggs & Stratton engines are lubricated by one (1) of three (3) methods:

1. Splash System (Dipper or Oil Slinger)
2. Constant Level Splash System
3. Ejection Pump System

Both splash systems use the movement of the connecting rod to spray oil to all the surfaces requiring lubrication. A dipper which is either a projection on the bottom of the rod cap, or an extension of one the the cap screws, dips into the oil on each revolution of the engine, splashing the oil to all the internal parts of the engine.

In the splash system, the dipper dips into the oil reservoir in base of engine. It has no pumps or moving parts, Fig. 558.

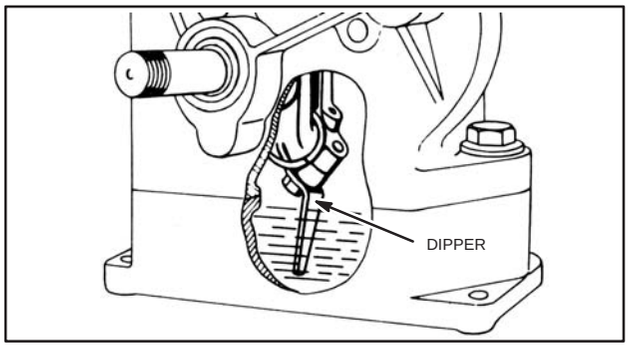

Fig. 558 – SPLASH SYSTEM

The Constant Level System consist of a trough into which the rod cap dipper plunges. The trough is filled by a pump actuated by an eccentric on the cam gear and thus a constant oil level is maintained in the trough, even though the oil level in base may vary, Fig. 559.

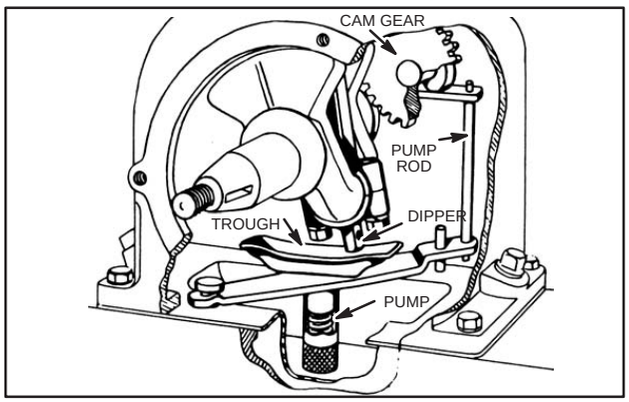

Fig. 559 – CONSTANT OIL LEVEL SYSTEM

The Ejection Pump System utilizes a pump from which oil is squirted upward into internal engines parts. The pump is actuated by an eccentric on the cam gear, The movement of the rod and crankshaft also help throw oil to all internal parts of the engine, Fig. 560.

Table No. 40
OIL SYSTEM GUIDE

ENGINE MODEL	* TYPE OF OIL SYSTEM	SEE ARTICLE #
A – Before Serial No. 180755	3	1
A – After Serial No. 180755	1	**
B – Before Serial No. 185186	3	1
B – After Serial No. 185186	1	**
FH	2	2
FI	2	3
FJ	2	4
H	1	**
I, IBP	3	5
I – After Serial No. 303000	1	**
K	3	6
L***	1	9
M	2	4
N – Type No.'s 205000 to 205499	3	5
N – Type No.'s 205500 to 205999	3	7
N, NS After Serial No. 305000	1	**
PB	2	8
Q	2	4
R	2	4
RC, RH, RL	3	6
S***	1	9
T***	1	9
U	3	5
W	3	6
WI (5 Digit Type No.'s)	3	5
WI (6 Digit Type No.'s)	1	**
WM***	1	10
WMB	1	**
WMI	3	5
Y	1	**
Z	3	6
ZZ – Before Serial No. 292883	3	6
ZZ – After Serial No. 292883	1	**
9, 14, 23	1	**
5, 6, 8	1	**
6H, 8H	3	7

* TYPES of OIL SYSTEMS, A. – Splash, B. – Constant Level Splash, C. – Ejection Pump

** Splash System (See Fig. 558.),

*** Originally used Type 2. Changed to Type 1 when repaired

OIL SYSTEMS, (cont'd)

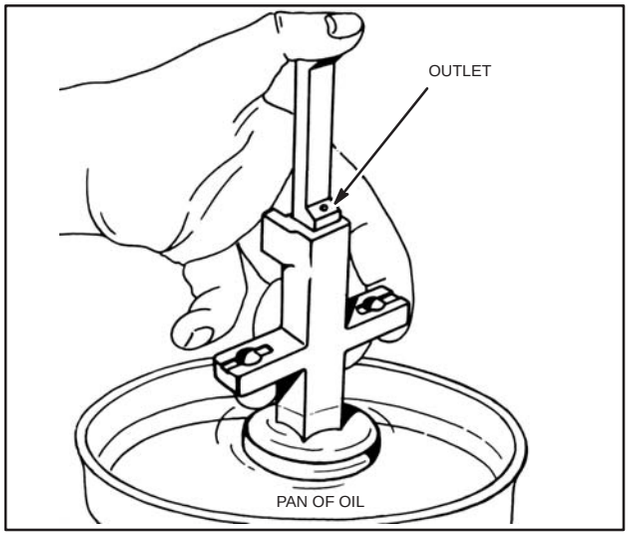

Fig. 560 – EJECTION PUMP

All pumps – either ejection type or constant level splash type – should always be tested while engine is being repaired.

This can be done by immersing the pump inlet in oil and working the plunger up and down. The ejection type pump should shoot a jet of oil from the outlet hole, Fig. 560.The constant level splash type should fill the oil trough with oil. If this does not occur, the entire pump should be thoroughly cleaned and retested. If it still does not work, it should be replaced with a new one. See Table No. 40 for the type of oil system used on each engine model.

ARTICLE 1 – MODELS A, B

The pump rod is also the plunger on this type of oil pump, Fig. 561.

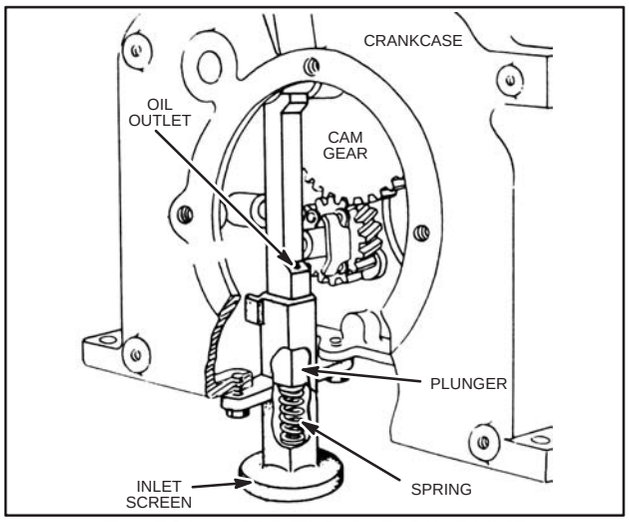

Fig. 561 – MODELS A, B OIL PUMP

To Remove Pump

Lay engine on its back. Remove the two (2) cap screws which hold the pump to bosses on bottom of crankcase. Take care not to lose plunger or spring. Test and clean pump as explained at the beginning of this section. If it does not eject oil at outlet hole it must be replaced.

To Assemble Pump

Place spring in pump body. Place plunger in pump with oil outlet hole opposite to boss on top of pump body.

To Assemble Pump to Engine

Push plunger down into pump compressing spring. Grasp pump with one hand, the fore finger at oil outlet, holding plunger in. Place pump in crankcase with the oil outlet toward the crankshaft. Tighten cap screws. Check to see that the end of plunger is against the cam gear. Be sure governor crank is between the governor gear and the boss on end of pump body. For old style pump see Fig. 562.

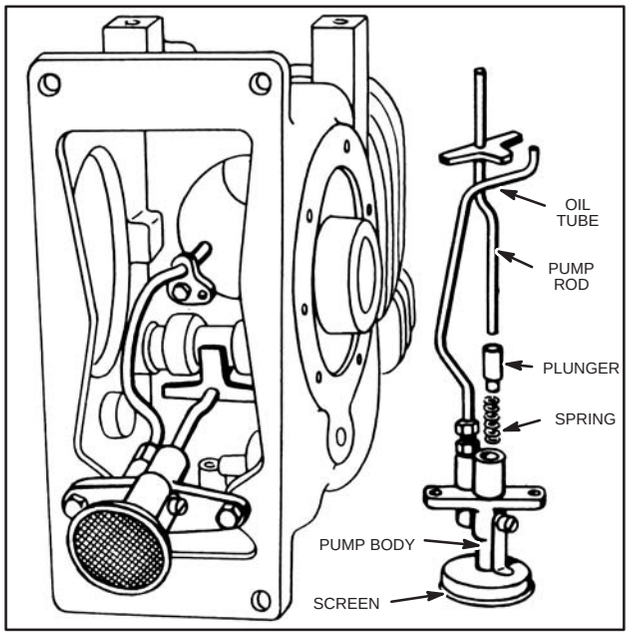

Fig. 562 – MODELS A, B OLD STYLE OIL PUMP

OIL SYSTEMS, (cont'd)

ARTICLE 2 – MODEL FH

This pump is permanently attached to the oil pan which is assembled between the crankcase and the base. The base on this model is the gas tank, Fig. 563.

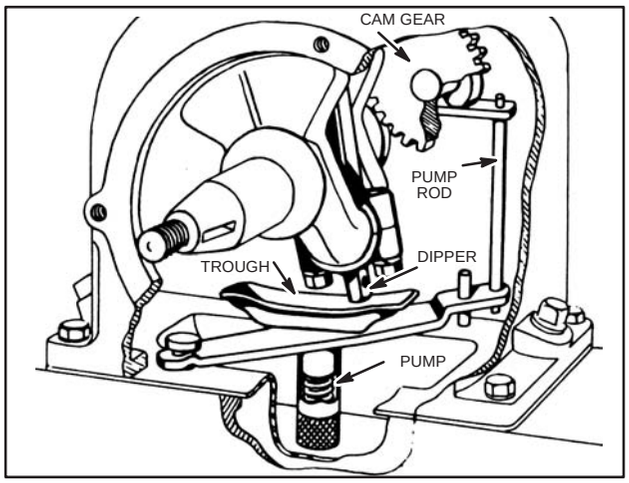

Fig. 563 – MODEL FH OIL PUMP

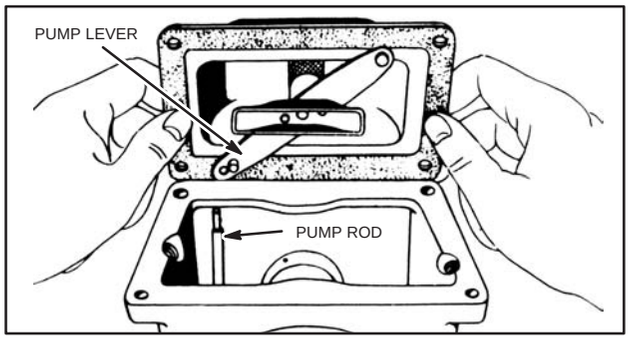

Fig. 564 – REASSEMBLING MODEL FH OIL PUMP

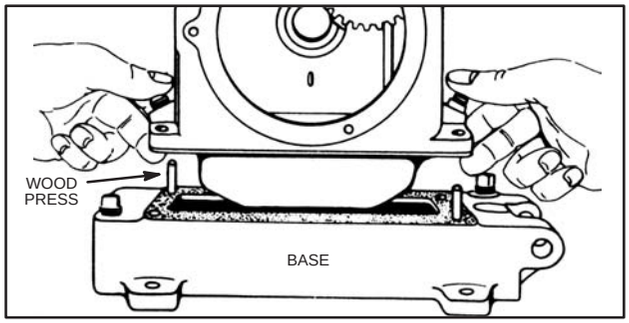

Fig. 565 – MOUNTING CRANKCASE MODEL FH

To Check Oil Pump

Fill the oil pan with oil to within 1/2" of the top. Work the the plunger up and down. If the oil trough fills with oil the pump is working satisfactorily. If not, clean and recheck. If it still does not work, it should be replaced with a new one.

To Reassemble

Secure two (2) wooden pegs which fit securely in the base mounting holes but are small enough to pass through those of the oil pan and crankcase. Invert cylinder. Place pump rod into hole in cam follower, Fig. 564. Assemble gaskets to oil pan and base and place oil pan on crankcase with pump rod in the small hole in pump lever. With wooden pegs in engine base, turn crankcase to upright position, holding the oil pan in place. Lower the crankcase assembly on the base with the pegs guiding it into place. Remove pegs and assemble screws, Fig. 565.

ARTICLE 3 – MODEL FI

The pump body and oil trough is a unit assembly, mounted on two (2) bosses in the engine base, Fig. 566.

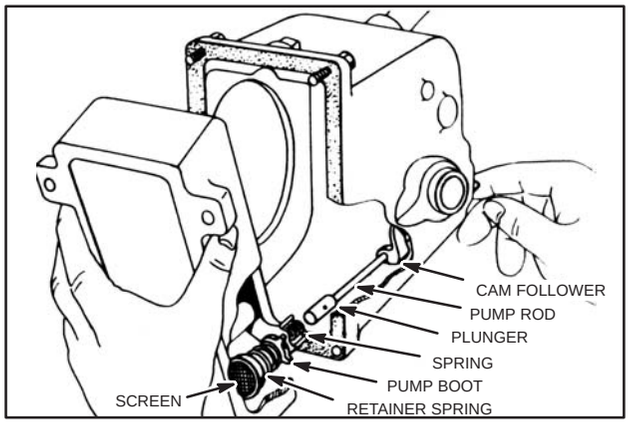

Fig. 566 – OIL SYSTEM MODEL FI

To Check Pump

Fill base with oil so intake is about 1/2" below surface. Insert pump spring, plunger, and rod. Work rod up and down. If trough fills with oil, pump is working. If not, disassemble, clean and reassemble. If trough still does not fill, the pump assembly must be replaced.

OIL SYSTEMS, (cont'd)

To Assemble Base to Crankcase

Lay engine on its side, breather side up. The crankcase should overhang the edge of the bench. Insert the upper base screws in the crankcase mounting holes and hang the base gasket on these screws. Insert the pump rod in the hole of the intake valve cam follower. Place the plunger on the end of the pump rod. Place the base against crankcase so the that plunger enters hole in pump body. THE PLUNGER MUST ENTER INTO HOLE IN PUMP BODY. Start upper base screws into base. Hold base firmly against crankcase and set entire assembly upright on the base. tighten all screws.

ARTICLE 4 – MODELS FJ, M, Q, R

Testing and cleaning instructions are the same as for previous trough type pumps.

To Reassemble

Insert straight end of pump rod into hole in crankcase until flat tongue rests against cam gear. Place pump spring and plunger in pump body before assembling base to crankcase, Fig. 567. All other instructions are the same as for Model FI.

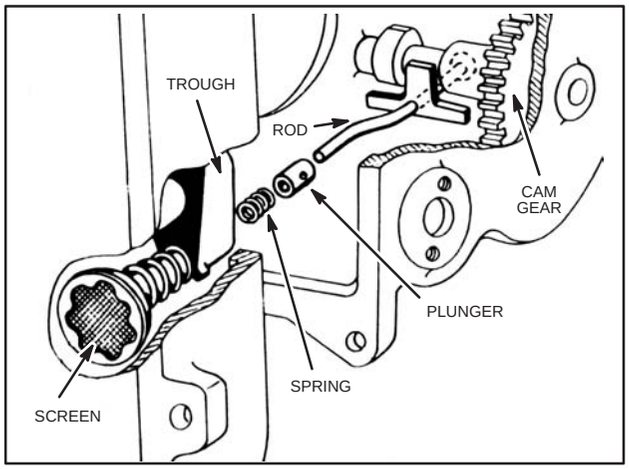

Fig. 567 – REASSEMBLING PUMP

ARTICLE 5 – MODELS I, IBP, N, U, WI, WMI

Pump can be tested by filling base so oil is 1/2" over inlet. Push plunger up and down. Oil should squirt from outlet hole. Remove from base by loosening screws.

To Reassemble

Place pump on two (2) bosses which protrude upward from base. Tighten down with screws, Fig. 568. If a baffle plate is used, the screws are longer and the spacers go between the pump and the baffle plate, Fig. 568. Place plunger and spring in place.

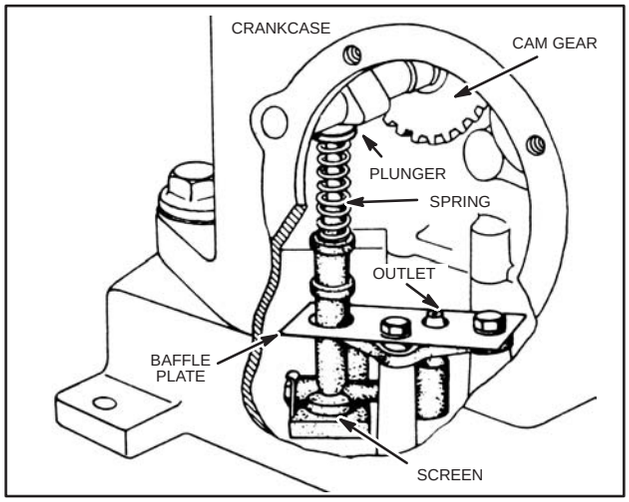

Fig. 568 – OIL SYSTEM

Assemble base to crankcase. Two (2) types of bases are used with these pumps – (A) The dowel pin base and (B) the 8 – hole mounting base. Assemble as follows:

1. Insert the dowel pins in the base.Place the base gasket on base. Set the crankcase down into base with dowel pins as guides. Tighten securely.

2. Lay crankcase on its side. Lift base and put two (2) mounting screws, with lockwashers through the mounting holes. Hang base gasket from these screws. Place base against crankcase and turn screws in a few turns. Start the rest of the mounting screws, being sure to align the base gasket. Tighten securely, Fig. 569.

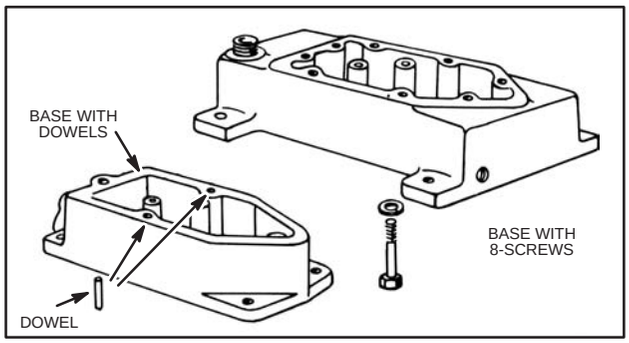

Fig. 569 – BASES

OIL SYSTEMS, (cont'd)

ARTICLE 6 – MODELS K, R, W, Z, ZZ

Remove pump by removing two (2) cap screws and pull tube gently from retainer. Do not force. Twist pump slightly so tube will not bend.

To Test

Place inlet in oil and move plunger up and down. Oil should squirt from outlet at top of tube. If not follow instructions for cleaning.

To Reassemble

Place double end of push rod into two holes in crankcase with flat tongue against cam gear. Insert spring and plunger into pump body, holding plunger in place with forefinger. Place pump into crankcase so that end of outlet tube slides through hole in retainer at top of crankcase. Then allow end of push rod to enter plunger. Do not force. Twist and wiggle pump until it slides into place without bending tube. Fasten into place with cap screws, Fig. 570. The outlet tube should be pointed so as to direct oil against the top of the piston.

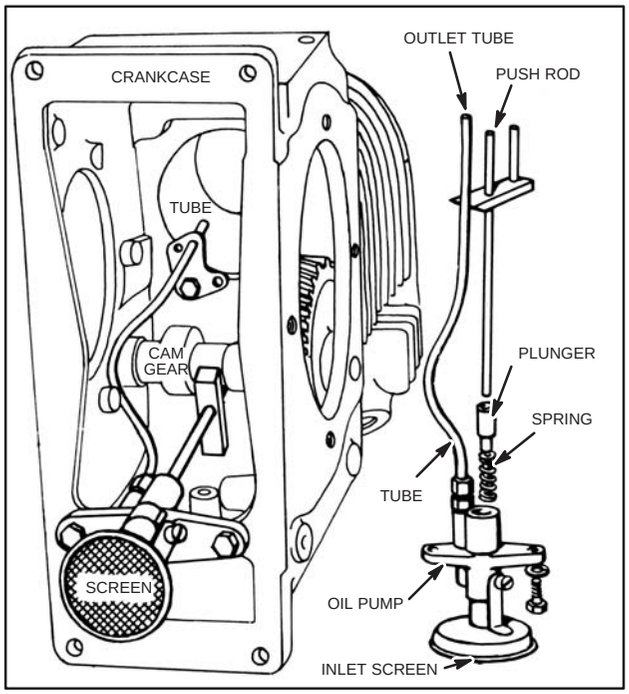

Fig. 570 – OIL SYSTEM

ARTICLE 7 – MODEL N (TYPE NO'S 205500 TO 205999) AND HORIZONTAL CYLINDER TYPE ENGINES

To Test Pump

Fill base with oil so that oil intake is 1/2" under surface. Spin gear rapidly with finger. Oil should squirt from outlet, Fig. 571. Ill. 2. If not, remove from base and clean thoroughly. Prime pump by squirting several shots of oil into intake hole with an oil can, Fig. 571, Ill. 3. Revolve gear until oil ejects from outlet nozzle. Reassemble pump to base and retest, spinning gear rapidly. If oil still does not squirt from outlet nozzle, replace pump.

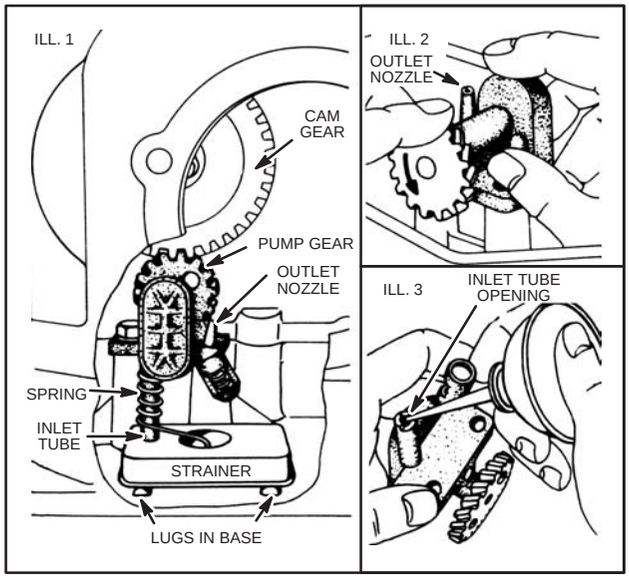

Fig. 571 – GEAR TYPE OIL SYSTEM

OIL SYSTEMS, (cont'd)

To Reassemble Pump

Place strainer in base on lugs which hold it off the bottom. Assemble spring to pump and insert inlet tube into hole in strainer and long end of spring into dent in strainer. Fasten pump to bosses with cap screws.

On horizontal cylinder engines the oil tube extends into the oil sump. Be sure that screen is clean, Fig. 572.

Assemble base and crankcase as in Article 5. Be sure the oil pump gear engages cam gear.

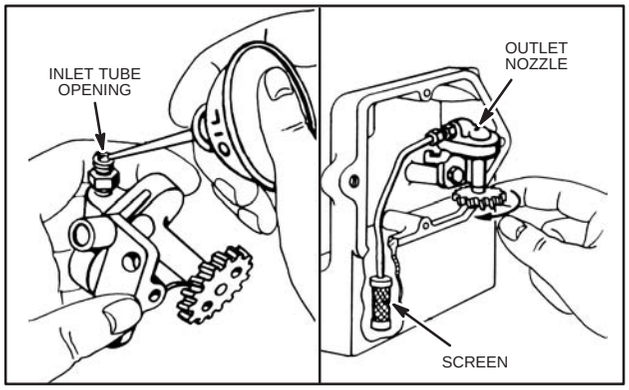

Fig. 572 – HORIZONTAL ENGINE OIL PUMP

ARTICLE 8 – MODEL D, P, PB

This type is similar to the trough type except that an oil pan is used instead of the trough. The oil pump forces the oil from the base up into the oil pan where it is splashed by the connecting rod, Fig. 573.

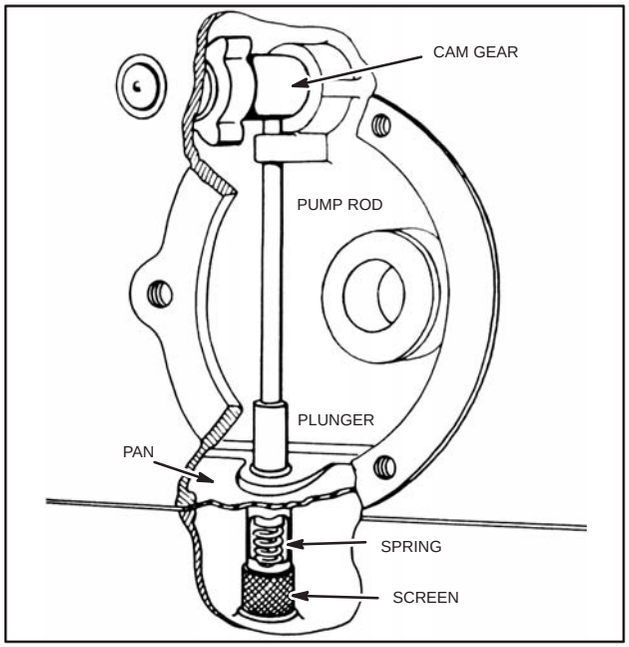

Fig. 573 – MODEL PB OIL SYSTEM

To Test Pump

Fill base with oil until inlet hole is 1/2" under the surface. Move plunger up and down. Oil pan should fill with oil. If not, clean and retest the pump. Replace if necessary.

To Assemble

Lay crankcase on side. Place pump rod in hole in boss and place plunger on end of rod. Put oil pump body in base and place gasket, oil pan, and second base gasket on base. Push two (2) base screws into base to hold these parts in place. Assemble base and pan to crankcase taking care to see that pump plunger enters pump body. Turn base in base screws to hold in place. Assemble remainder of base screws and tighten securely.

ARTICLE 9 – MODELS L, S, T

These models were originally equipped with a constant level splash system. In order to bring these engines up to latest design embodied in our newest models, we have eliminated the oil pump and trough and added a dipper on the connecting rod. To convert these engines to simple splash system see following instructions:

MODEL S – Use Oil Replacement Kit part #290923 (NLA).

MODELS L, T – Use Oil Pan Replacement Kit, Part #290924 (NLA).

Proceed as follows to assemble:

Disassemble cylinder head and remove piston and connecting rod assembly from engine. Discard old connecting rod, replace with new rod, Part #65756 (NLA), and reassemble rod and piston to engine, Fig. 574. Discard old oil pan, trough assembly and all pump parts. Replace with new oil pan which is minus oil pump, and assemble to engine. Reassemble cylinder head.

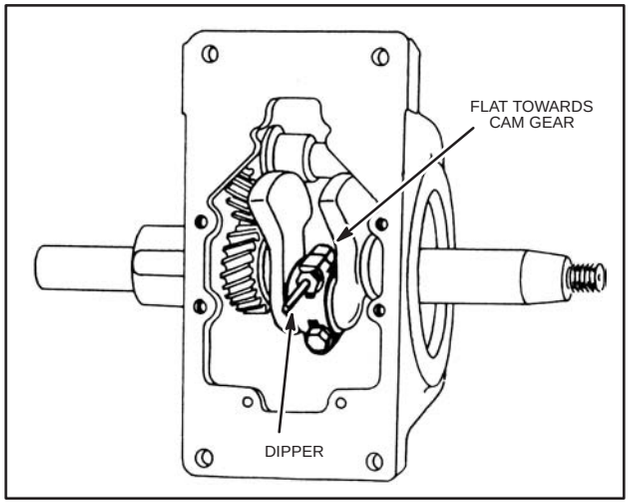

Fig. 574 – POSITION OF OIL DIPPER

OIL SYSTEMS, (cont'd)

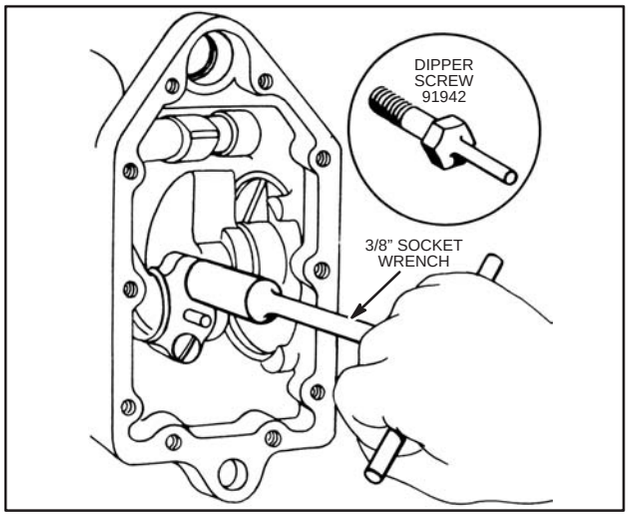

Fig. 575 – INSTALLING DIPPER SCREW

ARTICLE 10 – MODELS WM, PCWM, WMG

MODELS WM, PCWM – Use Part #91942 (NLA) Dipper Screw and Part # 62904 (NLA) Base Plate.

MODELS WMG – Use Part # 91942 (NLA) Dipper Screw and Part No. 62947 (NLA) Base Plate.

To Assemble

Remove the fillister head screw nearest the carburetor side of the engine from the connecting rod. In its place install Dipper Screw Part # 91942 (NLA), Fig. 575. Tighten screw and bend locking plate against hexagonal head.

Discard old plate, oil trough, and pump parts and assemble new base without oil pump parts.

On Model WMG see Chapter 11 for instructions on aligning generator before tightening base bolts.

NOTE: If connecting rod in engine is to be discarded for any reason, replace it with connecting rod Part #29733 (NLA). Use the proper base plate as listed above but dipper screw Part #91942 (NLA) will not be needed as this rod assembly includes a dipper.

Splash Lubrication, Oil Dipper

Aluminum (Numeric) and Cast Iron (Numeric) Engines

In the oil dipper splash system, the dipper dips into oil reservoir in base of engine, splashing oil on all moving parts. There is no pump nor moving parts. Install connecting rod and dipper by engine model series as shown in Fig. 576.

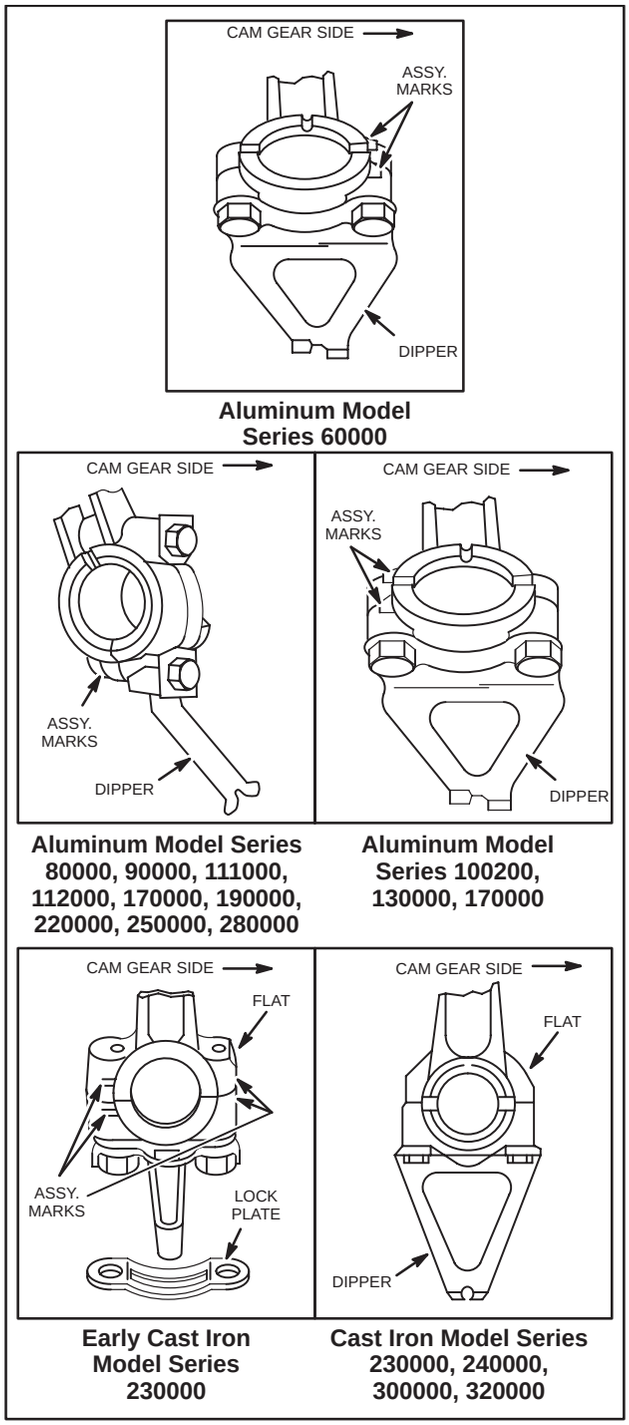

Fig. 576 – CONNECTING ROD INSTALLATION, HORIZONTAL CRANKSHAFT ENGINES

OIL SYSTEMS, (cont'd)

Slinger Lubrication, Oil Slinger Aluminum (Numeric) Engines

The oil slinger is driven by the cam gear and splashes oil on all moving engine parts.

Early style slingers using a die cast bracket assembly have a steel bushing between the slinger and the bracket. Replace bracket on which the oil slinger rides if worn to a diameter of .490" (12.4 mm) or less. Replace steel bushing if worn, Fig. 577. Ill. 1.

Newer style oil slingers have a stamped steel bracket. Unit is a one piece assembly, Fig. 577. Ill. 2 and Fig. 578. Spring washer is used only on Models 100900, 130900. Inspect gear teeth, old and new style; replace if worn.

NOTE: On Model Series 130900, equipped with right angle drive P.T.O. DO NOT USE SPRING WASHER on oil slinger bracket.

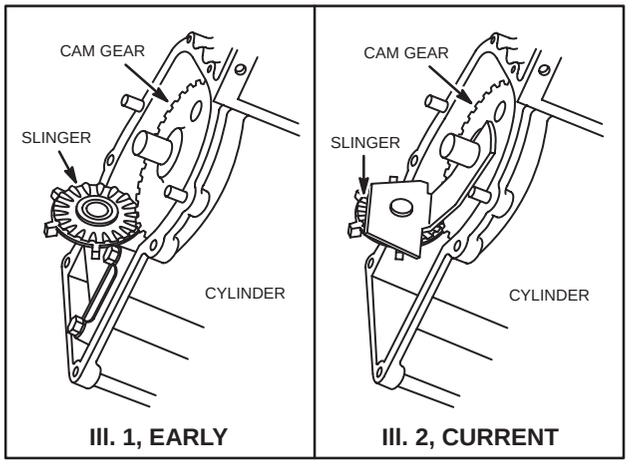

Ill. 1, EARLY **Ill. 2, CURRENT**

Fig. 577 – OIL SLINGER AND BRACKET

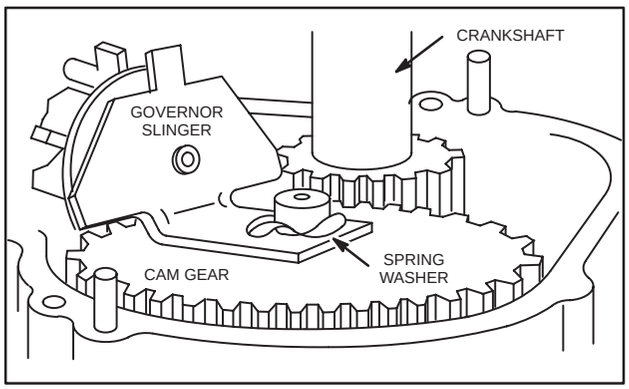

Fig. 578 – OIL SLINGER AND BRACKET VERTICAL CRANKSHAFT ENGINES

EXTENDED OIL FILL TUBE AND DIPSTICKS

1. When installing the extended oil fill tube and dipstick assembly, the tube must be installed so the "O" ring seal is firmly compressed.

2. Push the tube downward toward the sump, then tighten blower housing screw, which secures the tube and bracket.

3. When the cap and dipstick assembly is fully depressed or screwed down, it seals the upper end of the tube, Fig. 579.

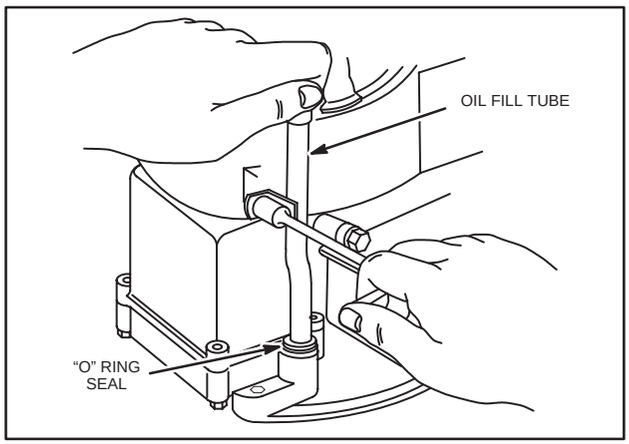

Fig. 579 – EXTENDED OIL FILL TUBE AND DIPSTICK

A leak at the seal between the tube and sump, or at the seal at the upper end of the dipstick can result in a loss of crankcase vacuum, and a discharge of smoke through the muffler.

CAUTION: DO NOT to overfill the sump or crankcase with oil when using the extended filler and dipstick. The dipstick is marked "DO NOT OVERFILL." Excessive oil will cause a smoking condition, as the engine attempts to discharge the surplus oil.

Section 7
ALTERNATORS, ELECTRIC, MECHANICAL & REWIND STARTERS, STARTER-GENERATORS

MECHANICAL and REWIND STARTERS

MECHANICAL STARTERS

To Adjust and Assemble Starters

Models A, B, L, M, S, T

ON ALL LEVER MODELS the starter return spring must always have sufficient tension to return lever against its stop. To increase tension of spring, move small hook at end of spring back to next peg, Fig. 580.

ON HAND CRANK MODELS tighten pinion gear on crankshaft securely. Oil crank gear through the oil cup and grease the pinion and crank gear teeth to reduce wear.

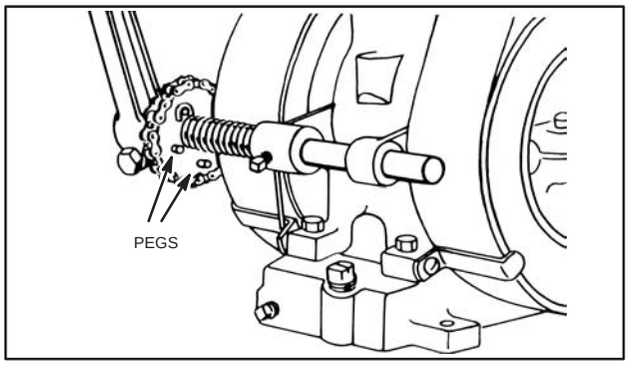

Fig. 580 – ADJUSTING SPRING TENSION

Models FH, FI

On the early Model FH engines (before Serial No. 57100), a clock spring type return spring was used. Correct assembly of spring is shown in left view in Fig. 581. To increase tension on the spring, loosen set screw on starter shaft and turn shaft to the left with a screw driver at the slot, then lock shaft in place. The later type spring used on Model FH (after Serial No. 57100) is shown in the right view of Fig. 581. One end is hooked through hole in sprocket and the other end in the spring lock. To change tension on this spring, loosen set screw and move starter assembly out far enough to permit turning of spring lock, then turn lock forward to increase tension and backwards to decrease tension. Slide starter assembly in place with spring lock up against blower case and lock shaft in place. Chain must align properly with sprocket on later models and with sprocket and sheave on earlier models. If out of alignment use pipe wrench to straighten lever.

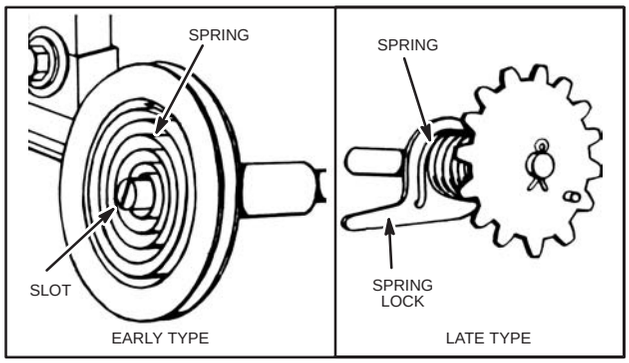

Fig. 581 – ADJUSTING SPRING TENSION

Models H, Y

The gear sector on the starter pedal of this type of engine should align squarely with the pinion on the crankshaft. Use washers on pedal shaft to adjust gear sector in the middle of the pinion gear. Be sure the sector does not bind at any place. To replace this sector, it is necessary to remove only two (2) rivets and rivet a new one in place.

The starter clutch pinion Part #63316 (obs.) on the first Model H and Y engines had blunt teeth. This starter pinion was used with sector assemblies Parts #'s 29180 (obs.) and 29185 (obs.), which were equipped with a spring tooth assembly as shown in Fig. 582. Do not use this pinion with sector assemblies Part #'s 29539 (obs.) and 29540 (obs.). The new starter clutch pinion Part # 63621 (obs.) has pointed gear teeth. This pinion can be used with all of the sector assemblies shown in Fig. 582.

ALTERNATORS, ELECTRIC, MECHANICAL & REWIND STARTERS, STARTER-GENERATORS, (cont'd)

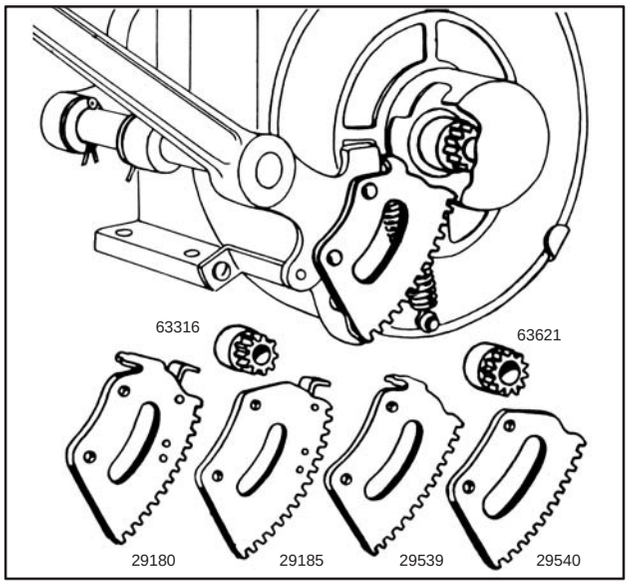

Fig. 582 – STARTER SECTORS

Models K, Z, ZZ

To assemble starter, place two (2) eccentric bushings on upper studs and two (2) plain washers on lower studs. Then place starter bracket gear and shaft assembly and four (4) plain washers and nuts on studs. Press starter gear toward engine until teeth mesh with pinion. Hold it in this position. Turn two (2) eccentric bushings, Fig. 583. until starter gear can be moved back and forth approximately 1/32" without moving pinion or crankshaft. Tighten nuts securely. Oil the crankgear shaft through the oil cup and grease the pinion gear teeth occasionally to reduce wear.

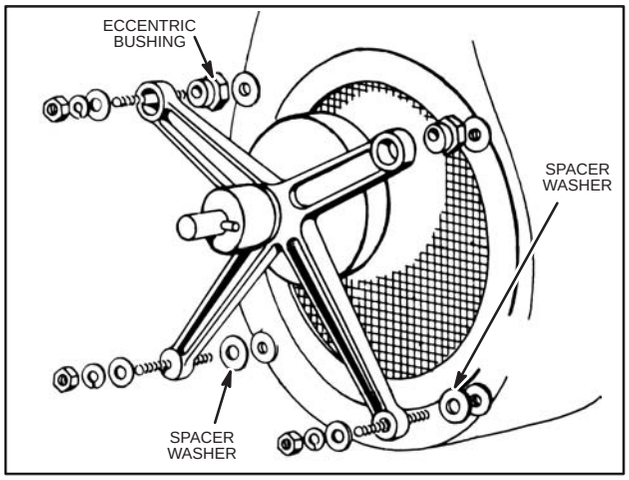

Fig. 583 – STARTER ASSEMBLY

Models Q, R, W

The early Model Q engines were equipped with a starter as shown in right hand view of Fig. 584. If gears of this type on starter bind, place shims under starter bracket.

The later Model Q and all Model R and W hand crank engines were equipped with a starter as shown in left hand view, Fig. 584. If gears of this type starter bind, place shims between starter bracket and crankcase.

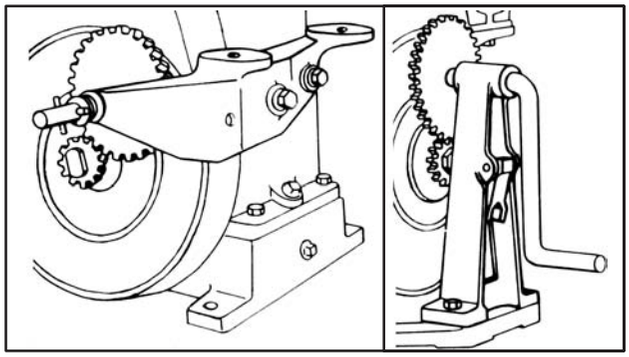

Fig. 584 – STARTER ASSEMBLY

Models WI, WM, WMB, WMI

The starter pedal is made of two (2) parts – (1.) Pedal proper and (2.) pedal stop. These are held together with an adjusting bolt. To adjust, loosen the bolt and set pedal to desired position. Adjust the pedal to get the longest possible stroke without striking any part of the machine. The first tooth on the starter sector must clear the teeth of the starter pinion.

Should the starter pedal return spring loosen or lose its tension, loosen the bolt which holds the return spring cup. Turn the cup to the left until there is enough tension to return the starter pedal back to normal position after depressing it, then tighten the bolt. Too much tension may cause spring to break. Be sure the spring is in the proper position with the long end below the pedal adjusting bolt and the hooked end in the slot of the cup, Fig. 585.

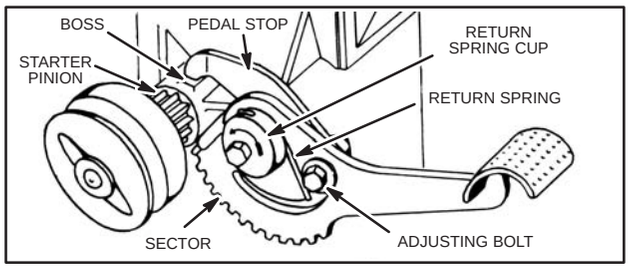

Fig. 585 – STARTER ASSEMBLY

If starter pedal return spring and cup have been removed and washed, grease before reassembling.

ALTERNATORS, ELECTRIC, MECHANICAL & REWIND STARTERS, STARTER-GENERATORS, (cont'd)

To Repair Starters
Models A, L, M, S, T

Broken chains can easily be repaired with standard repair link assembly, Part #69928 (obs), Fig. 586.

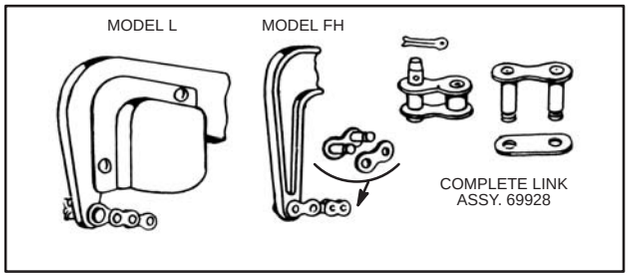

Fig. 586 – STARTER REPAIR LINK

Models H, Y

If starter sector slips over pinion teeth or sector and pinion teeth have too much clearance, it is usually caused by a worn starter shaft hole.

To repair, use reaming fixture No. 60079-T3 (obs). Remove starter pedal, blower case, and clutch. Slip frame (A) over end of crankshaft and into left starter lug hole, Fig. 587. Ream with the smaller (13/16") dia. shell reamer. Use nut (B) on end of arbor to draw reamer in uniformly. If nut (B) turns, lock it with a suitable pin at slot. Run reamer in far enough to chamfer end of hole to take bushing easier.

NOTE: If 13/16" diameter reamer does not clean up worn hole, run the 7/8" diameter through. In most cases the smaller diameter is sufficient. After reaming, press in the right size bushing. The 13/16" diameter bushing is Part #63673 (obs). The 7/8" diameter bushing is Part #63706 (obs). With bushing in place, burnish hole by pushing steel ball (C) through twice with plunger (D). Try starter shaft in hole. If shaft is tight in hole, push steel ball through third time. Shaft should have good slide fit in hole.

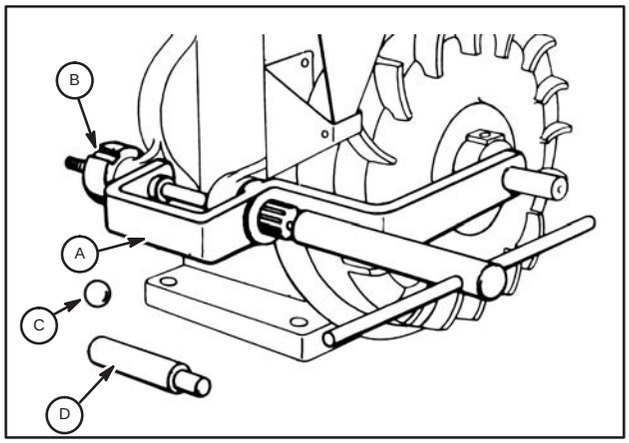

Fig. 587 – REPAIRING WORN STARTER SHAFT HOLE

REWIND STARTERS

To Replace Spring and Rope on Rewind Starter – Cast Iron Alpha-Numeric & Numeric Alpha Models

1. Remove blower housing with starter case attached.
2. Take off five (5) nuts, screws, and washers holding case to blower housing.

NOTE: If replacing rope only, omit instructions in steps 4 to 12 inclusive and follow instructions in steps 13 to 18.

3. Unwind rope. Wedge screw between pulley and case to prevent spring unwinding, Fig. 588. Untie knot and remove rope.

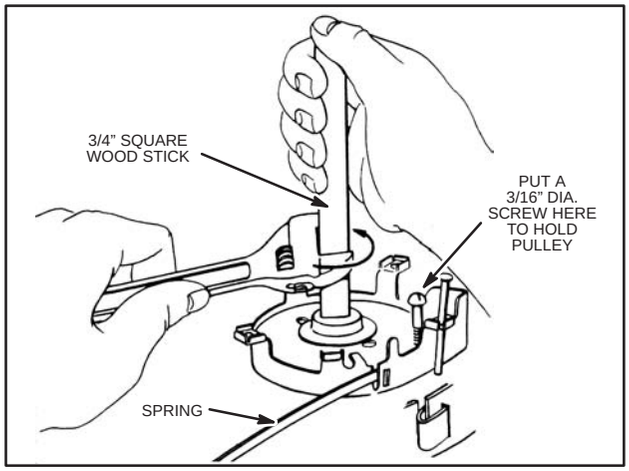

Fig. 588 – REMOVING ROPE

4. Bend up two (2) tangs holding pulley to case.
5. Lift out pulley.

ALTERNATORS, ELECTRIC, MECHANICAL & REWIND STARTERS, STARTER-GENERATORS, (cont'd)

NOTE: If starter assembly includes two (2) segment shaped drag plates, discard these. Remove spacer and broken spring.

6. Fasten starter case with two fairly large nails to a solid surface.

7. Hook new spring around nail as shown in Fig. 589. Smear some grease in a cloth and run cloth along the length of spring.

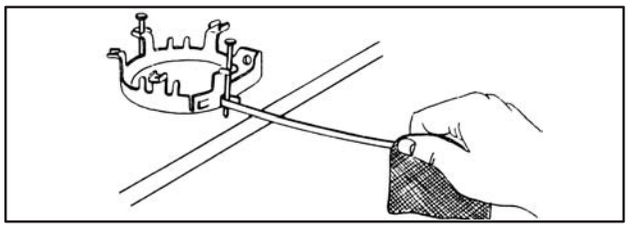

Fig. 589 – LUBRICATING SPRING

8. Hook end of spring with straight hook in slot of pulley. Be sure spring end is tight against slot end, Fig. 590, Fig. A.

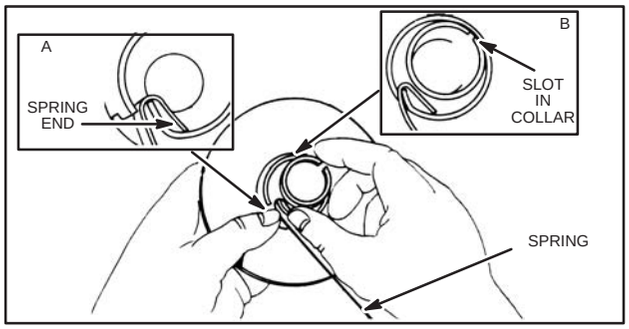

Fig. 590 – HOOKING SPRING ON PULLEY

9. Insert spacer collar as shown to hold spring in place (slot in collar opposite spring end, Fig. 590B).

10. Place pulley and spring in case with edge of spring in slot, Fig. 591.

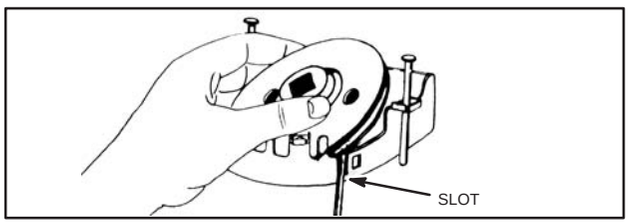

Fig. 591 – INSTALL PULLEY AND SPRING

11. Bend down two (2) tangs opposite one another to within 1/8" of pulley surface. Do not use four (4) tangs, Fig. 592.

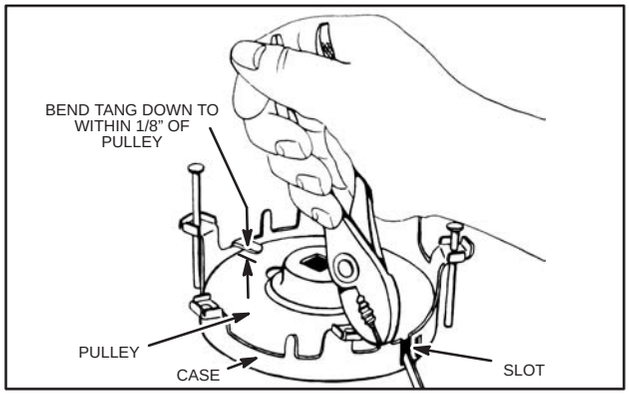

Fig. 592 – BENDING PULLEY TANGS

12. Use a 3/4" square stick about 6" long. Mark pulley and wind up 13-1/4 turns counterclockwise with a wrench. Push end of spring until it snaps into hole of case. Hold the pulley in this wound up position and wedge a 3/16" screw or other suitable object between pulley and case, Fig. 588. USE ROPE Part #69932 WITH SHEAVE HAVING 3/16" WIDE GROOVE. ROPE, Part #66429 (obs), IS USED WITH SHEAVES HAVING 7/32" WIDE GROOVE.

13. When replacing rope in handle tie a figure eight knot around pin with about a 3/4" end exposed. Pull pin into slot of handle, Fig. 593. Wind a thin piece of wire around other end of rope, pass through eyelet of case and between flanges of pulley. Select the nearest hole that comes within arc indicated by arrows in Fig. 594, Fig. A. Slip the wire and rope through this hole. It is permissible to back pulley off not more than 1/4 turn to bring hole in most favorable position.

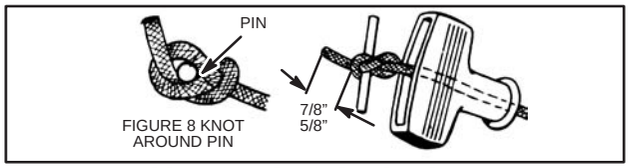

Fig. 593 – TYING KNOT ON STARTER HANDLE PIN

ALTERNATORS, ELECTRIC, MECHANICAL & REWIND STARTERS, STARTER-GENERATORS, (cont'd)

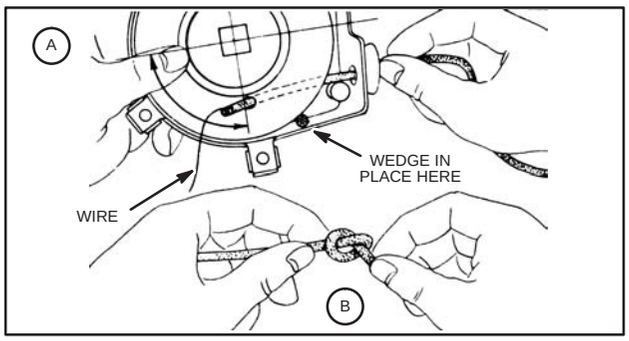

Fig. 594 – INSTALL ROPE IN PULLEY AND TIE KNOT

14. Remove wire and tie a single knot at end of rope, Fig. 594B. Pull rope tight. Use a block of wood and compress knot until it extends not more than 13/31" above face of pulley, Fig. 595.

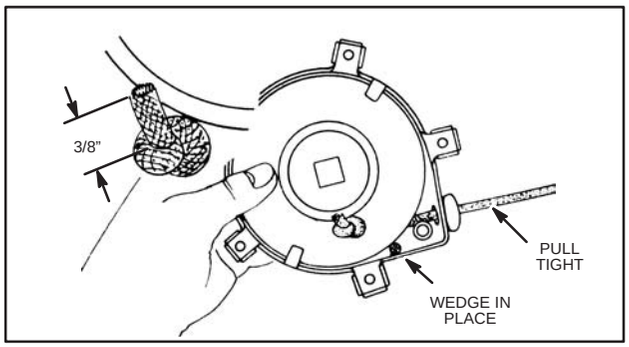

Fig. 595 – TIGHTENING KNOT

15. While holding rope tight remove wedge and release pulley slowly.

16. If square shaft of clutch has one side marked "top," this must be on top and nearly as level as possible when starter and blower housing are reassemble to engine.

17. Fasten starter to blower housing with screws, nuts and washers.

18. Mount blower housing and starter to engine.

19. Pulley clearance around the case should be equal. Spring will not wind up rope if pulley is not central. Bend legs of case to centralize pulley in case.

Rewind Starters – Numeric Model Series

Various rewind starter assemblies are illustrated below, Fig's. 596 through 599.

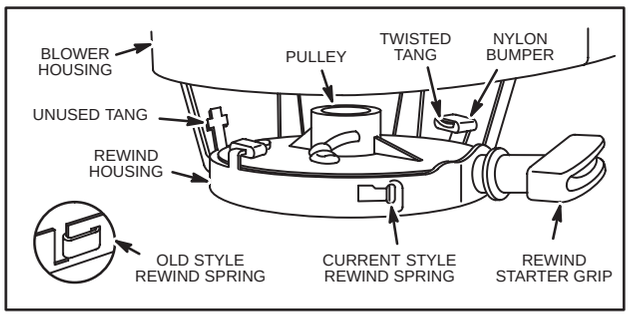

Fig. 596 – OLD STYLE – MODEL SERIES 60000, 80000, 90000, 100200, 100900 AND 110000

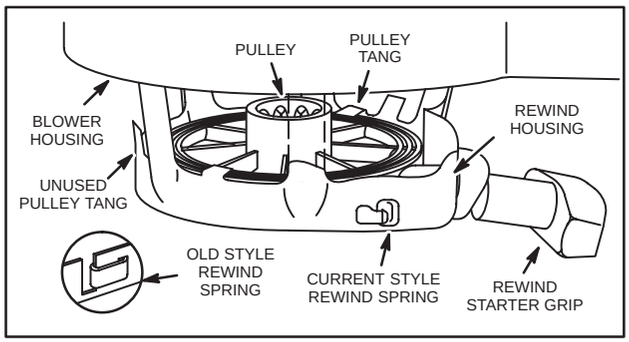

Fig. 597 – MODEL SERIES 60000, 80000, 90000, 100200, 100900 AND 110000

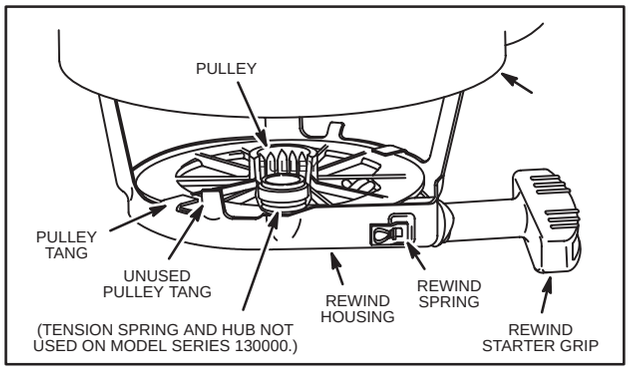

Fig. 598 – MODEL SERIES 130000, 140000, 170000, 190000, 220000 AND 250000

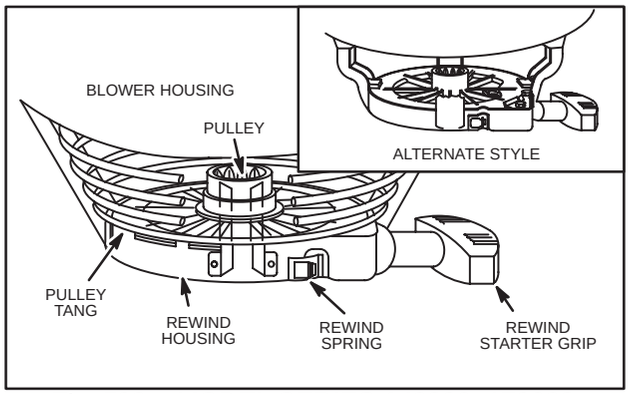

Fig. 599 – MODEL SERIES 140000, 170000, 190000, 250000, 300000, AND 320000

ALTERNATORS, ELECTRIC, MECHANICAL & REWIND STARTERS, STARTER-GENERATORS, (cont'd)

Remove Rope or Spring

1. Pull starter rope out as far as it will go.
2. While holding pulley and starter housing, pull pulley end of rope out and untie or cut knot at end of rope.
3. With rope removed, grasp outer end of rewind spring with pliers, Fig. 600, and pull out of housing as far as possible.
4. Turn spring 1/4 turn and remove from pulley or bend one of the tangs with Tang Bender, Tool #19229, up and lift out starter pulley to disconnect spring.

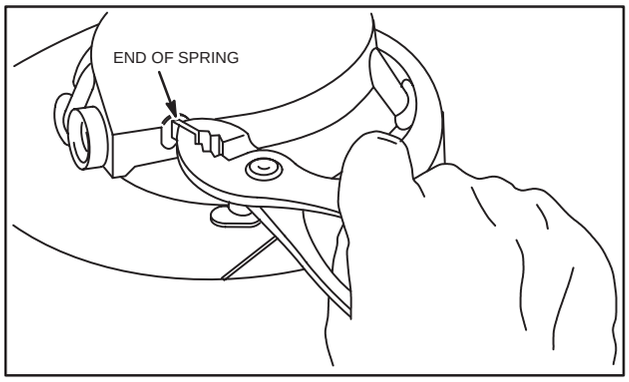

Fig. 600 – REMOVE SPRING

Install Spring

1. Clean rewind housing, pulley and rewind spring in solvent.
2. Wipe clean with cloth.
3. Straighten spring to allow easier installation and restore tension.
4. Oil spring.
5. Insert either end of spring into blower housing slot and hook into pulley, Fig. 601.

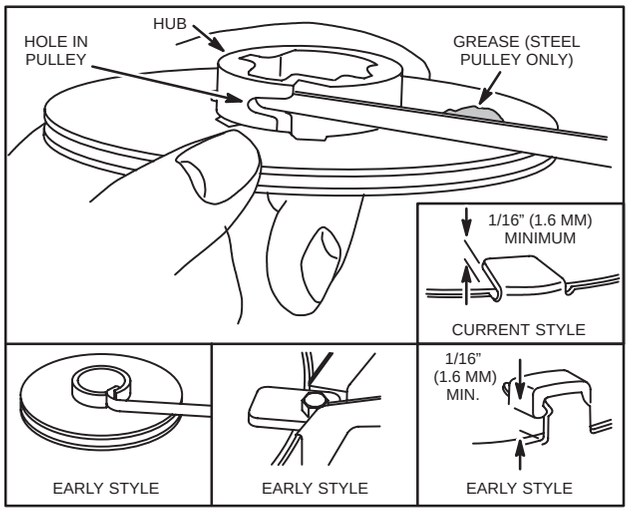

Fig. 601 – INSTALL SPRING

6. Place a dab of grease on pulley.
7. Set pulley into housing and bend tang down, Fig. 601. Adjust tang gap as shown. Pulley must be depressed fully into rewind housing when measuring tang gap.

NOTE: Do not remove nylon bumper from old style tang when replacing metal pulley with nylon pulley. Replace nylon bumpers if worn.

Wind Spring

Place a 3/4" square piece of stock into center of pulley hub or make rewind tool similar to one shown in Fig. 602. GRASPING STOCK WITH A WRENCH, WIND PULLEY COUNTERCLOCKWISE UNTIL SPRING IS WOUND TIGHTLY. Then back off pulley one turn or until hole in pulley for rope knot and eyelet in blower housing are in alignment, Fig's. 606 and 607.

Spring should be securely locked in smaller portion of tapered hole, Fig. 603.

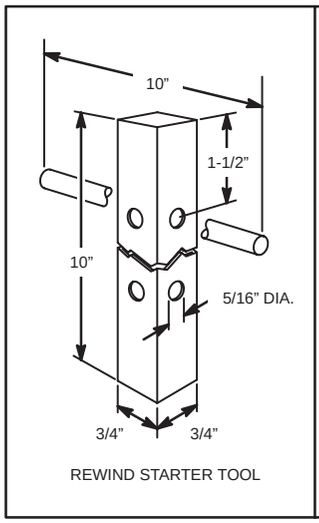

Fig. 602 – REWIND STARTER TOOL

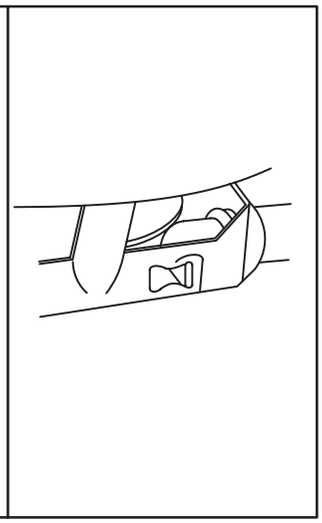

Fig. 603 – SPRING IN RETAINER SLOT

ALTERNATORS, ELECTRIC, MECHANICAL & REWIND STARTERS, STARTER-GENERATORS, (cont'd)

Install Rope

Inspect rope. Replace if frayed. Insert rope through handle and tie a figure eight knot. Insert pin through knot and pull tightly into handle, Fig. 604. ALWAYS SEAL BOTH ENDS OF ROPE.

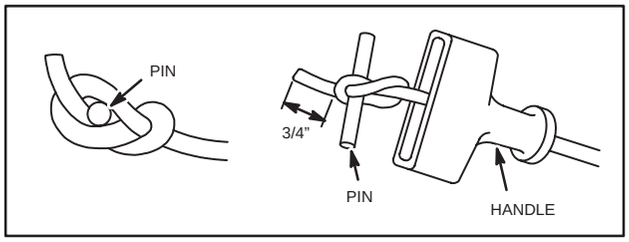

Fig. 604 – INSTALL ROPE

NOTE: If re-using old rope, burn pulley end of rope with a match. Wipe with waste cloth, using caution while it is still hot, to prevent swelling and unraveling.

WARNING: When installing a new rope, check parts list to be sure correct diameter and length rope are used.

NOTE: Do not remove nylon bumper from old style tang when replacing metal pulley with nylon pulley. Replace nylon bumpers if worn.

A rope inserter tool may be made by using a piece of music wire or spring wire, and forming it as shown in Fig. 605.

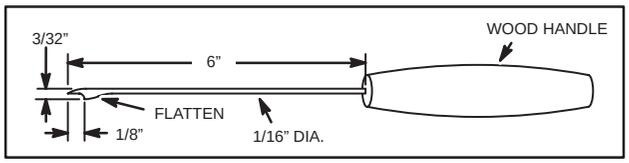

Fig. 605 – ROPE INSERTER

Old Style with Guide Lug

Thread wire and rope through rope eyelet in housing and out pulley hole, Fig. 606.

NOTE: Rope must pass inside a guide lug on metal pulley, Fig. 606.

Tie a knot in rope and pull tight. Make sure knot in pulley does not contact bumper tangs, Fig. 606.

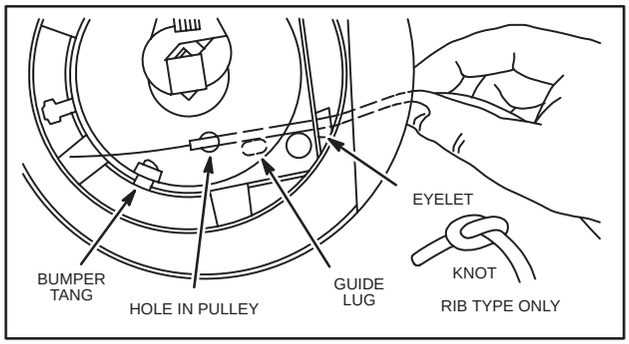

Fig. 606 – INSERTING ROPE, OLD STYLE

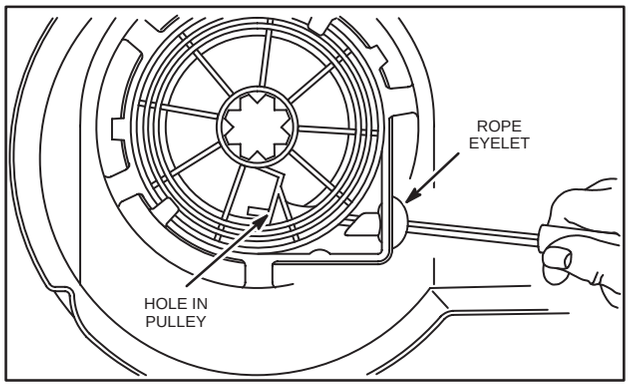

Fig. 607 – INSERTING ROPE

Current Style without Guide Lug

Tie a knot in rope and pull tight. Manipulate knot so it can be pulled down into knot cavity, Fig. 608.

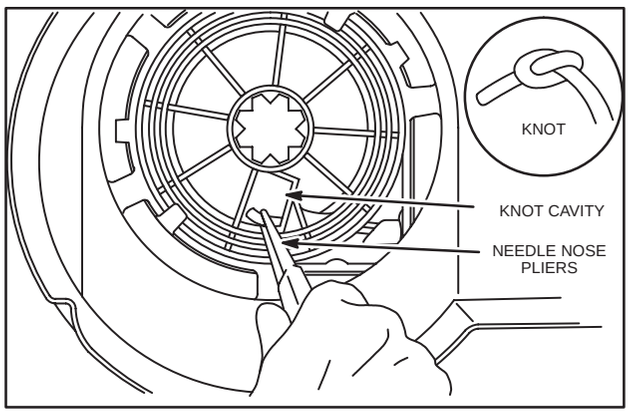

Fig. 608 – TIE KNOT

ALTERNATORS, ELECTRIC, MECHANICAL & REWIND STARTERS, STARTER-GENERATORS, (cont'd)

STARTER CLUTCH (OLD STYLE)

Inspect and clean starter clutch assembly as necessary, Fig's. 609 and 610. Do not oil ball cavity area.

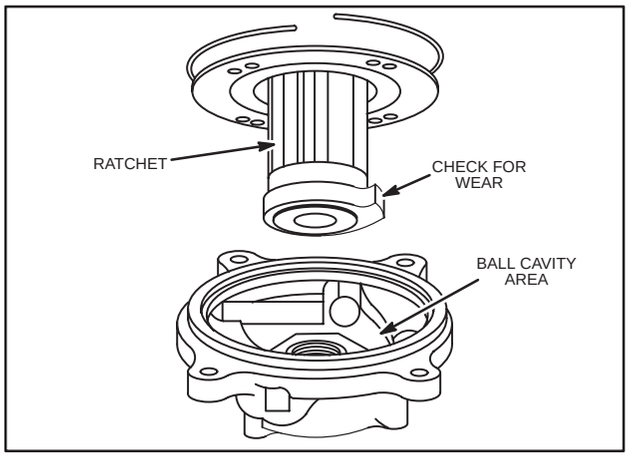

Fig. 609 – STARTER CLUTCH (OLD STYLE)

Starter Clutch (Sealed – New Style)

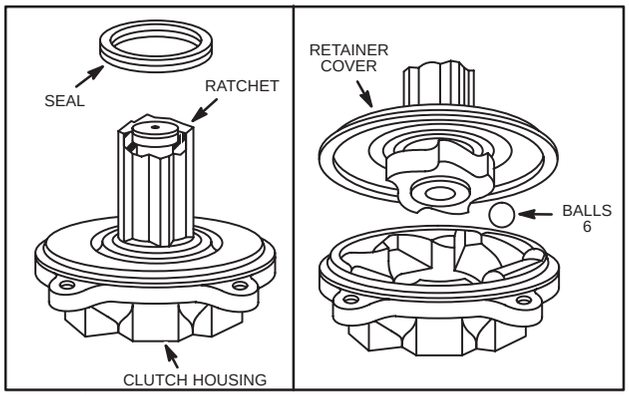

Fig. 610 – SEALED CLUTCH ASSEMBLY (CURRENT STYLE)

If necessary, the sealed clutch can be disassembled by using a screwdriver or wedge to pry the retainer cover from the housing, as shown in Fig. 611. Place one drop of engine oil on end of crankshaft before replacing clutch assembly on crankshaft. Tighten clutch to torque noted on specification sheet for your model engine. DO NOT run engine without screen screws assembled to clutch.

NOTE: Clean ratchet by wiping with cloth only.

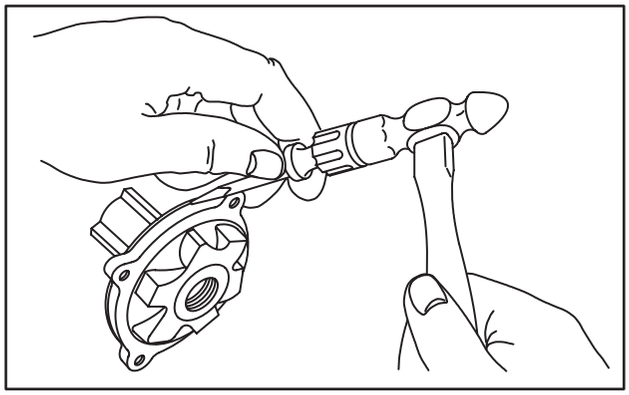

Fig. 611 – DISASSEMBLING SEALED CLUTCH

NOTE: The sealed clutch may be installed on older model engines, by modifying the starter pulley and crankshaft. The old pulley can be made to fit the new clutch by cutting off the hub to a dimension of 1/2" as shown in Fig. 612.

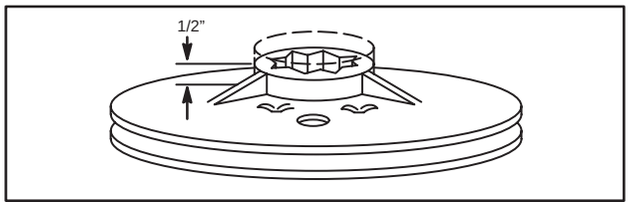

Fig. 612 – PULLEY MODIFICATION

The crankshaft must be shortened 3/8" and the end chamfered as shown in Fig. 613. A new screen #221661 is required with the new clutch.

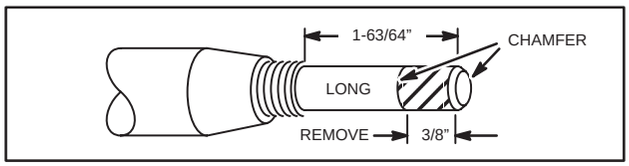

Fig. 613 – CRANKSHAFT MODIFICATION

NOTE: Do not remove nylon bumper from old style tang when replacing metal pulley with nylon pulley. Replace nylon bumpers if worn.

ALTERNATORS, ELECTRIC, MECHANICAL & REWIND STARTERS, STARTER-GENERATORS, (cont'd)

Replace Rewind Assembly, (For Engines Model Series 130000, 5 HP & Up)

1. If original starter housing is spot welded to blower housing, drill out spot welds using a 3/16" (4.8 mm) diameter drill. Drill deeply enough to loosen spot welds ONLY.

2. Locate replacement rewind assembly in desired position.

3. Install screws from inside blower housing up through starter housing mounting leg.

4. Fasten securely with nuts as shown in Fig. 614.

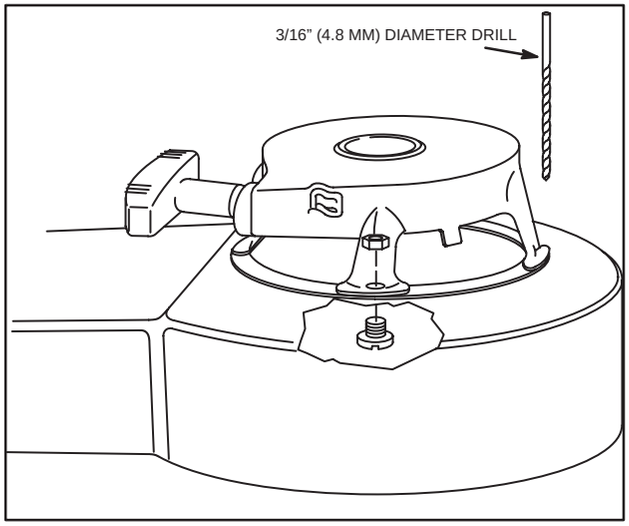

Fig. 614 – REMOVING AND INSTALLING REWIND

VERTICAL PULL STARTERS

Vertical pull starters have been made in two versions, Figs. 615 and 616.

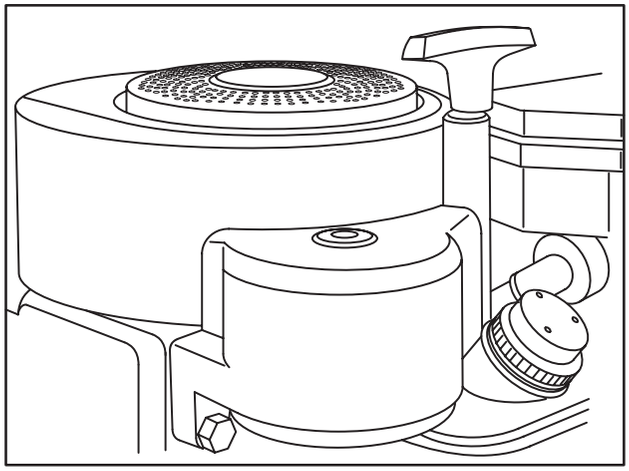

Fig. 615 – STANDARD VERTICAL PULL

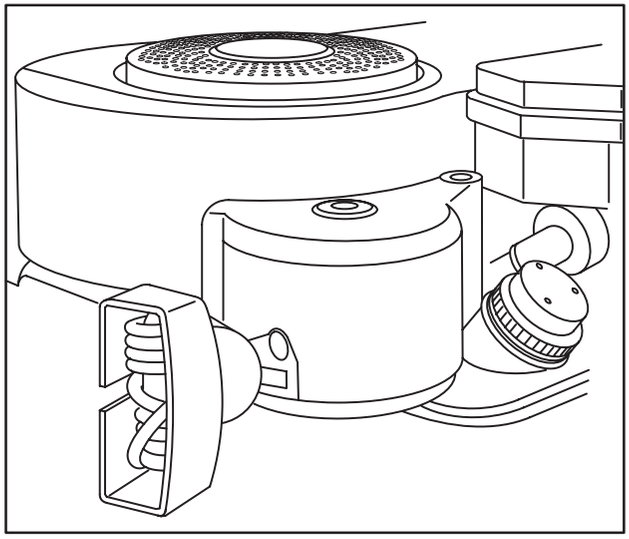

Fig. 616 – ALTERNATE STYLE VERTICAL PULL

NOTE: Before removing alternate style starter, measure length of rope from starter housing to rope handle at equipment handle bar.

ALTERNATORS, ELECTRIC, MECHANICAL & REWIND STARTERS, STARTER-GENERATORS, (cont'd)

Disassemble Starter

Remove Rope or Spring

1. Before servicing starter, all tension must be removed from rope and spring.

2. Use a screwdriver to lift the rope up approximately one foot.

3. Wind rope and pulley counterclockwise 4 turns, as shown in Fig. 617. This will completely release tension from the starter spring.

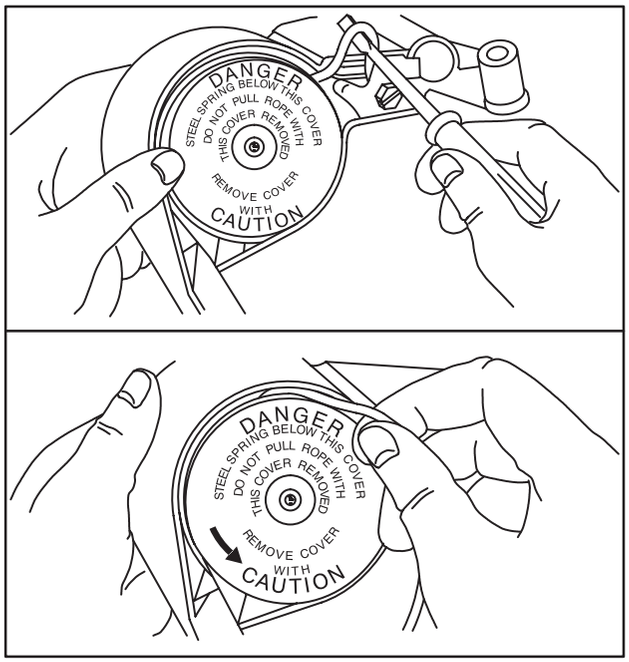

Fig. 617 – PROVIDING SLACK

4. Note the warning on the plastic cover, then use a screwdriver as shown in Fig. 618 to remove the cover.

WARNING: Do not pull rope with the pulley cover removed, unless the spring is detached from spring anchor.

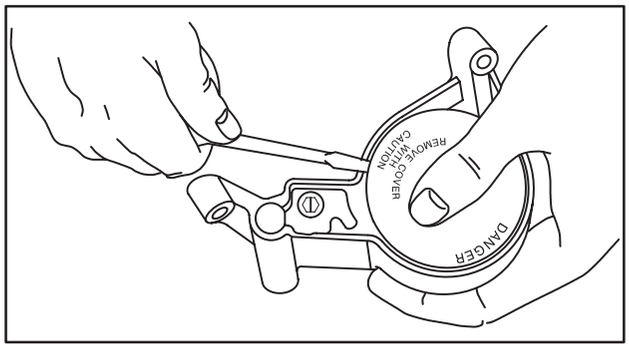

Fig. 618 – REMOVING COVER

5. Remove anchor bolt and anchor, Fig. 619.

NOTE: Inspect starter spring for kinks or damaged ends. If the starter spring is to be replaced, carefully remove it from the housing.

6. Replace cover to keep spring in housing.

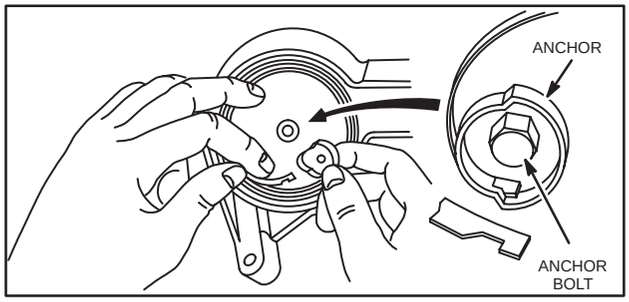

Fig. 619 – REMOVING SPRING ANCHOR

7. Remove rope guide and note position of link before removing assembly from housing, Fig. 620.

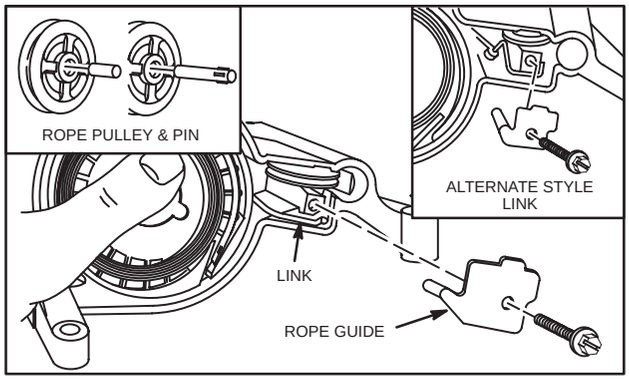

Fig. 620 – REMOVING ROPE GUIDE

ALTERNATORS, ELECTRIC, MECHANICAL & REWIND STARTERS, STARTER-GENERATORS, (cont'd)

Rope pulley and pin may be replaced if worn or damaged, when used.

Make a rope inserter tool, as shown in Fig. 621.

8. Use the rope inserter tool and/or pliers to remove rope from pulley, Figs. 622 and 623.

9. Untie knot and remove rope from pulley.

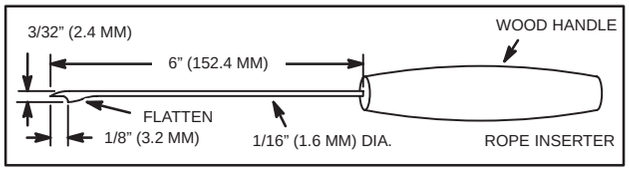

Fig. 621 – ROPE INSERTING TOOL

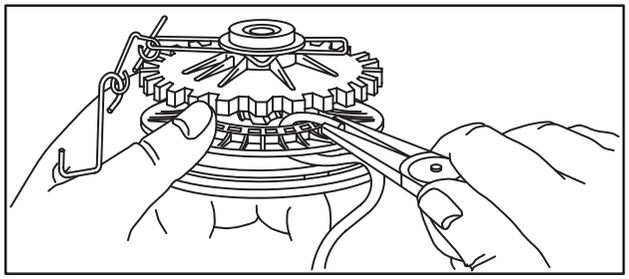

Fig. 622 – REMOVING ROPE FROM PULLEY

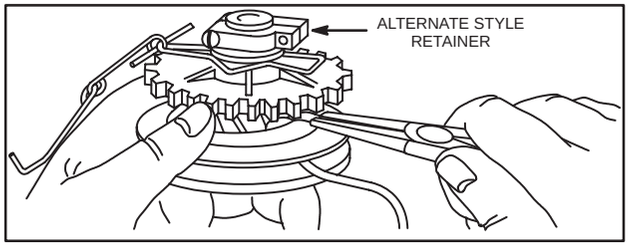

Fig. 623 – (ALTERNATE STYLE) REMOVING ROPE FROM PULLEY

10. Remove rope from grip, as shown in Fig. 624.

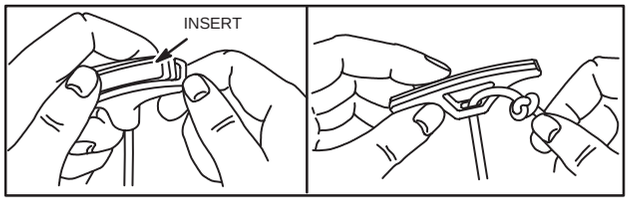

Fig. 624 – REMOVING ROPE FROM GRIP

If pulley or gear is damaged, replace with new assembly.

Clean all dirty or oily parts and check link for proper friction. Link should move gear to both extremes of its travel. If not, replace link assembly, Fig. 625.

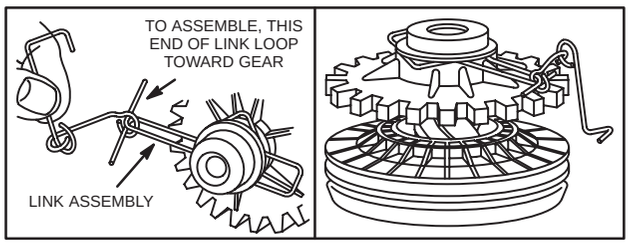

Fig. 625 – CHECKING FRICTION LINK

NOTE: To repair vertical pull starters with INTER-LOCK SYSTEM, follow equipment manufacturers interlock repair procedure.

Assemble Starter

Install Spring

1. Place pulley and gear assembly in starter housing.

2. Hook end of spring into spring retainer on outside diameter of pulley, Fig. 626.

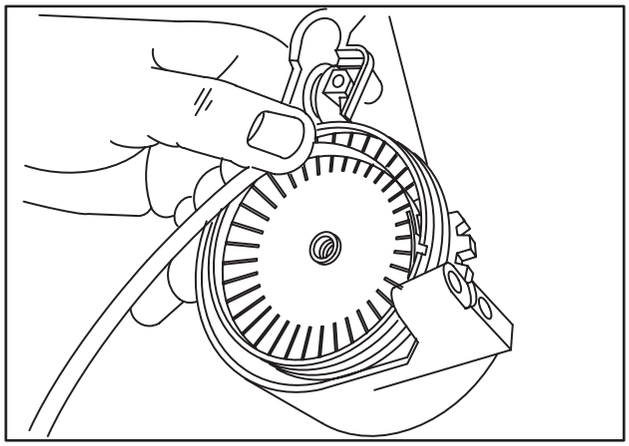

Fig. 626 – INSTALLING SPRING IN OUTER RETAINER

3. Rotate pulley clockwise to wind spring into pulley while holding end of spring in outer spring retainer, Fig. 627.

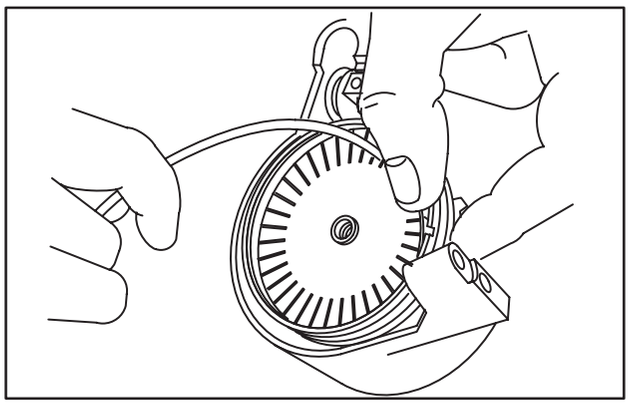

Fig. 627 – WINDING SPRING

ALTERNATORS, ELECTRIC, MECHANICAL & REWIND STARTERS, STARTER-GENERATORS, (cont'd)

4. Install spring anchor on free end of spring and install pulley cover, Fig. 628. Do not install anchor screw at this time.

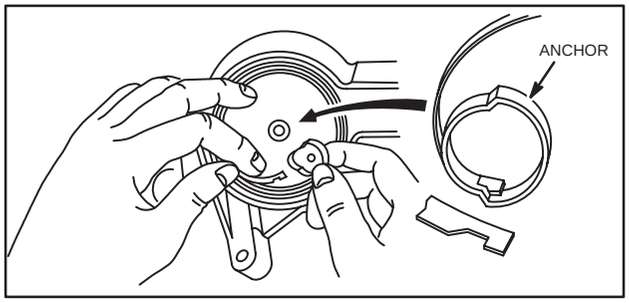

Fig. 628 – INSTALLING SPRING ANCHOR

Install Rope

WARNING: When installing a new rope, check parts list to be sure correct diameter and length rope are used.

1. Insert rope through housing and into pulley, using rope inserter tool.

2. Tie a small knot, heat seal and pull tight into recess in rope pulley. Rope must not interfere with gear motion, Fig. 629.

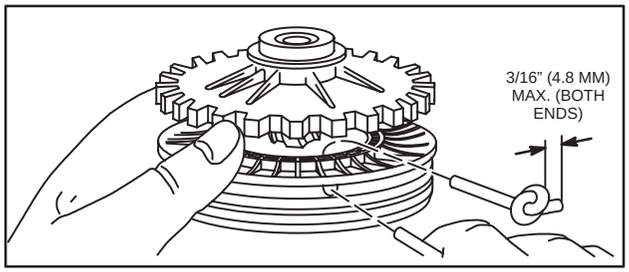

Fig. 629 – STARTING ROPE IN PULLEY

3. Install pulley and gear assembly in housing, with link in pocket or hole of casting, as shown.

4. Install small pulley, rope pulley pin, and rope guide, Fig. 630.

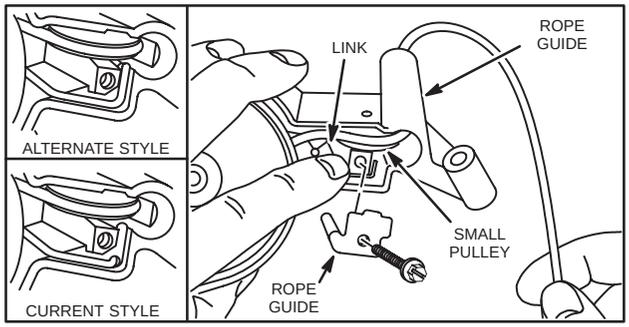

Fig. 630 – INSTALLING PULLEY ASSEMBLY

5. Thread rope through grip and into insert.

6. Tie a small, tight knot.

7. Heat seal the knot to prevent loosening.

8. Pull knot into insert pocket and snap insert into grip, Fig. 631.

NOTE: On alternate style starter, measure rope from handle end to guide on starter, the same distance as before it was removed from engine. Tie a slip knot in the rope at this point. DO NOT INSTALL HANDLE AND INSERT AT THIS TIME.

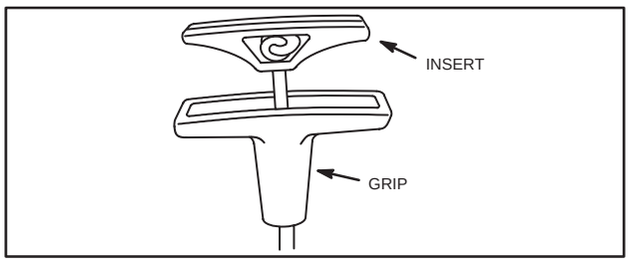

Fig. 631 – INSTALLING ROPE

9. Rotate pulley in a counterclockwise direction until rope is fully retrieved, Fig. 632.

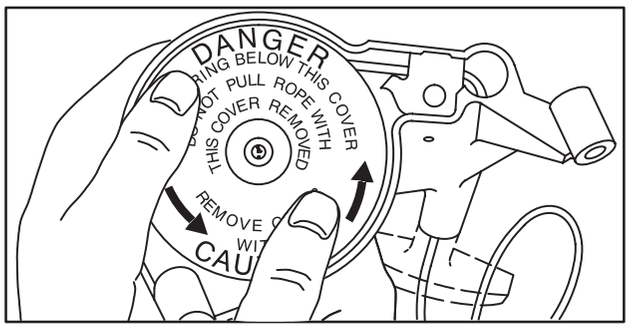

Fig. 632 – RETRACTING ROPE

10. Remove cover from pulley.

ALTERNATORS, ELECTRIC, MECHANICAL & REWIND STARTERS, STARTER-GENERATORS, (cont'd)

11. If not already done, hook free end of spring to spring anchor, and install screw.

12. Torque to 75 to 90 in. lbs. (8.5 to 10.0 Nm).

13. Lubricate spring with a small quantity of engine oil or lubricant, Fig. 633.

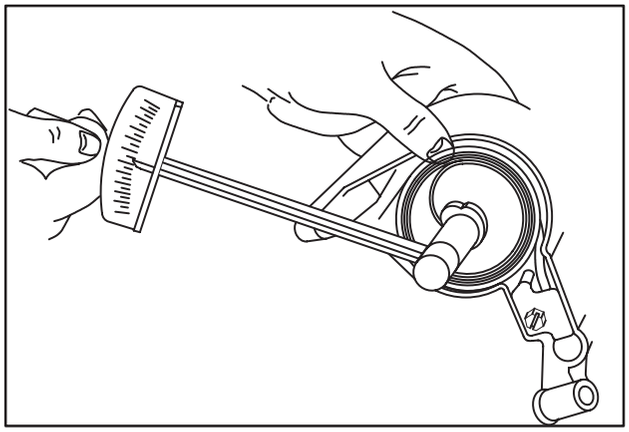

Fig. 633 – TIGHTENING SCREW

14. Snap cover in place.

15. Wind starter spring by pulling rope out approximately one foot.

16. Wind rope and pulley 2 or 3 turns clockwise to achieve proper rope tension, Fig. 634.

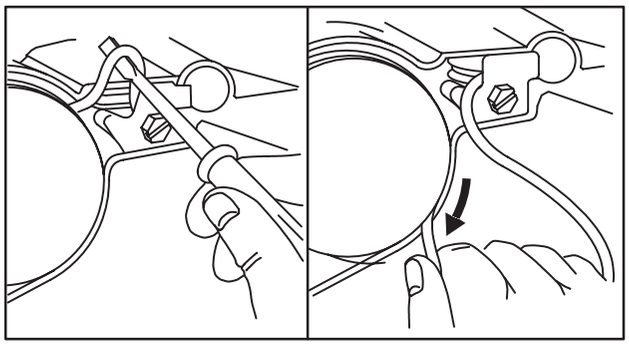

Fig. 634 – ADDING TENSION TO ROPE

17. Install starter on engine.

18. After installing alternate style starter on engine, route rope up to equipment control handle and install handle and insert, Fig. 631.

WIND-UP STARTERS

Two types of windup starters have been used. The control knob release, Fig. 635, was used with the unsealed four ball clutch. The control lever release, Fig. 636, can only be used with a sealed six ball clutch.

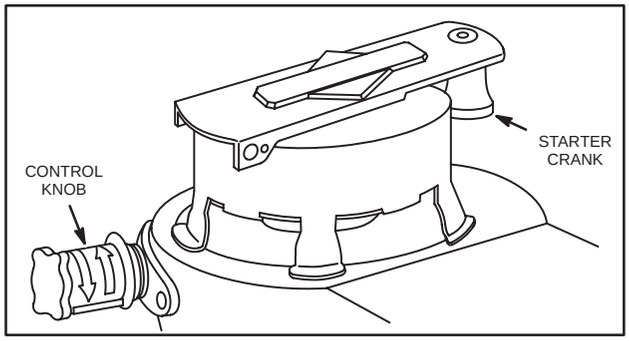

Fig. 635 – OLD STYLE STARTER ASSEMBLY

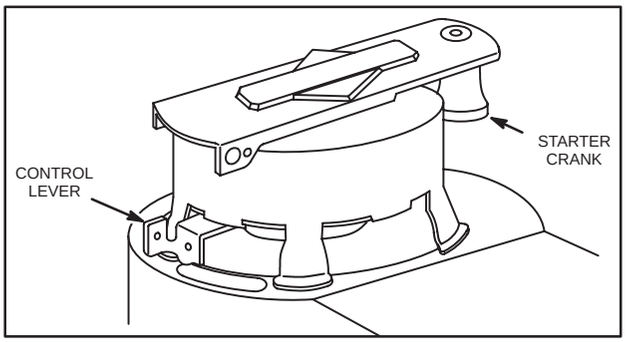

Fig. 636 – LEVER STARTER ASSEMBLY

WARNING: Before working on equipment, remove spark plug WIRE from SPARK PLUG TO PREVENT ACCIDENTAL STARTING. Make sure starter spring is not wound. This can be determined by attempting to turn starter crank clockwise.

1. If wound tight, release tension by placing control knob or lever to "START" position.

2. If starter spring does not release, place control at "CRANK" position.

3. To prevent injury, hold crank handle with one hand while removing Phillips head screw and handle assembly from starter housing. This will release spring, Fig. 637.

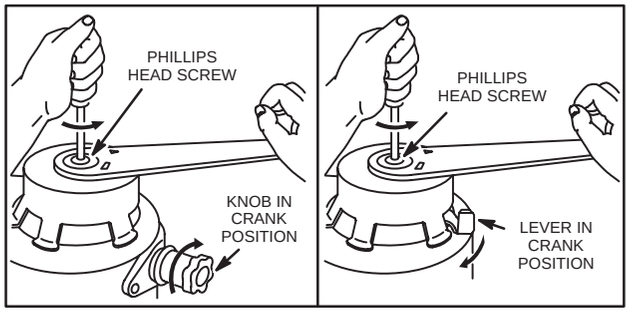

Fig. 637 – RELEASING SPRING

ALTERNATORS, ELECTRIC, MECHANICAL & REWIND STARTERS, STARTER-GENERATORS, (cont'd)

Check for Broken Spring, Wind-up Starter

1. To check starter for a broken spring, while unit is still on engine, place control knob or lever to "START" position.

2. Turn cranking handle ten turns clockwise.

3. If engine does not turn over, either the spring is broken or the starter clutch balls are not engaged.

WARNING: Keep hands and feet away from rotating blade or other moving parts.

4. While turning the cranking handle, watch the starter clutch ratchet.

5. If it does not move the starter spring is probably broken.

Disassemble Wind-up

1. Remove blower housing.

2. Remove screw holding cranking handle to housing, Fig. 637.

3. Bend tangs holding starter spring and housing assembly upward and lift retainer plate, spring and housing assembly out of blower housing, Fig's. 637 and 638.

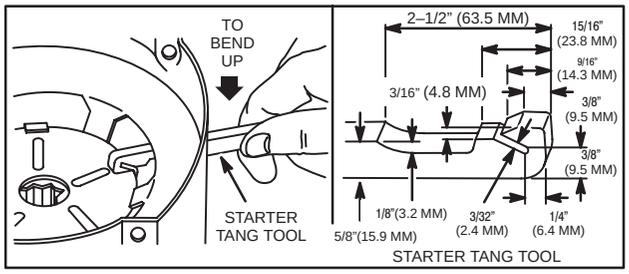

Fig. 638 – REMOVING SPRING HOUSING

WARNING: DO NOT ATTEMPT TO REMOVE STARTER SPRING FROM ITS HOUSING.

Inspect Starter Parts

Inspect spring and housing assembly for spring breakage or other damage. Inspect ratchet gear on outside of blower housing for wear or damage.

DO NOT remove retaining plate from spring and cup assembly.

Check movement of control knob or control lever for ease of operation and damage or wear. (Clean and oil.) Fig. 639.

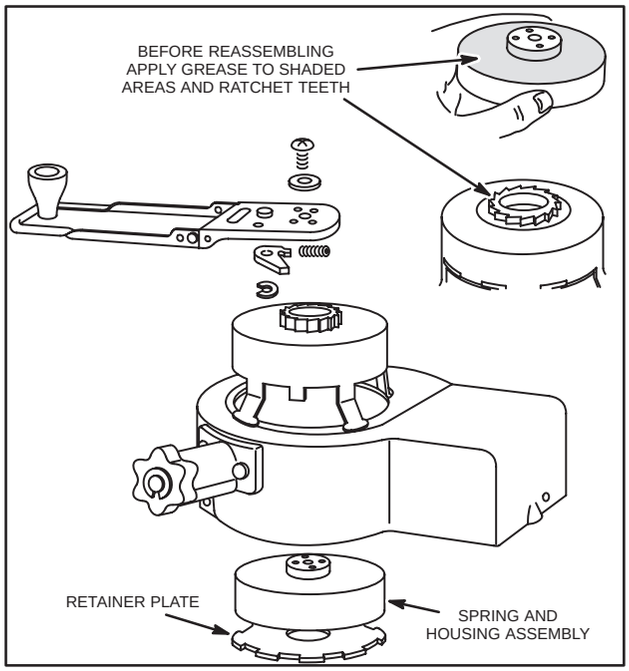

Fig. 639 – INSPECTING PARTS & REPLACING SPRING CUP

Assemble

When re-assembling, be sure to re-install spring washer in housing before placing cup, spring and release assembly into housing.

Bend retaining tangs down securely, Fig. 640.

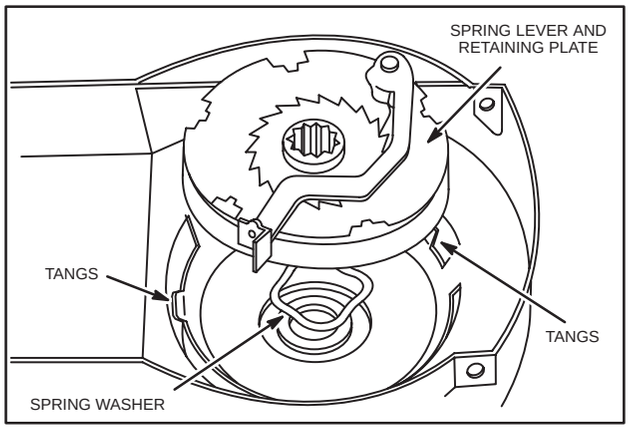

Fig. 640 – REPLACE SPRING LEVER AND RETAINING PLATE

ALTERNATORS, ELECTRIC, MECHANICAL & REWIND STARTERS, STARTER-GENERATORS, (cont'd)

ELECTRIC STARTERS

EQUIPMENT TO TEST STARTER MOTORS

The following is a list of equipment recommended to test and repair starter motors.

Digital Multimeter

The Digital Multimeter is available from your Briggs & Stratton source of supply. Order as Tool #19357. The meter may be used to read volts, ohms or amperes, and test diodes (rectifiers) when test leads are inserted in the appropriate receptacle, Fig. 641.

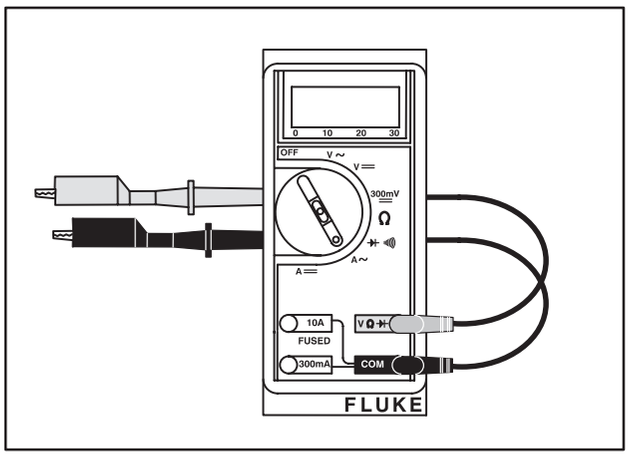

Fig. 641 – DIGITAL MULTIMETER

DC Shunt

Use with Digital Multimeter. The DC Shunt may be used to read starter motor current draw on 12 volt starter motors. Order as Tool #19359, Fig. 642.

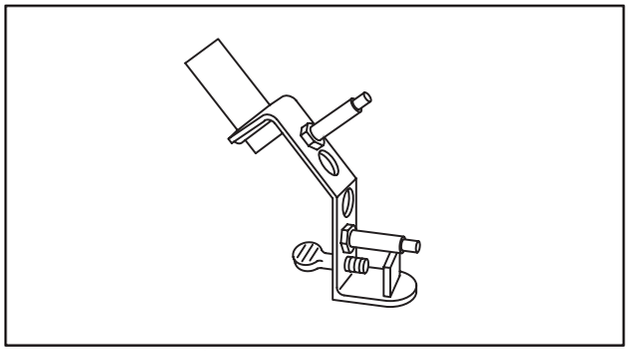

Fig. 642 – DC SHUNT

AC Shunt

Use with Digital Multimeter. The AC Shunt may be used to read starter motor current draw on 120 volt starter motors. Order as Tool #19358, Fig. 643.

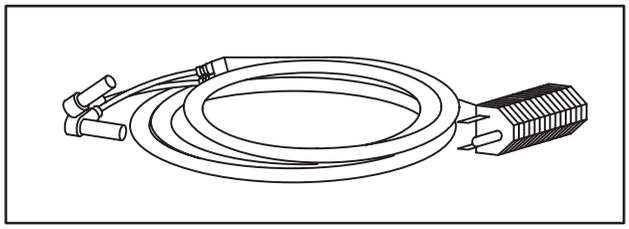

Fig. 643 – AC SHUNT

A Trysit Sirometer (Tachometer) is available from your Briggs & Stratton source of supply. Order as Part #19200. The Sirometer measures from 800 to 25,000 revolutions per minute (RPM), Fig. 644.

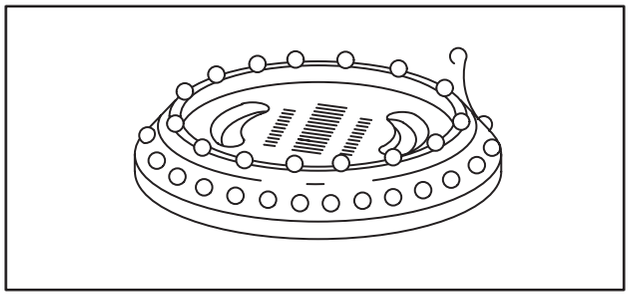

Fig. 644 – TRYSIT SIROMETER (TACHOMETER)

A starter motor test bracket may be made as shown in Fig. 645.

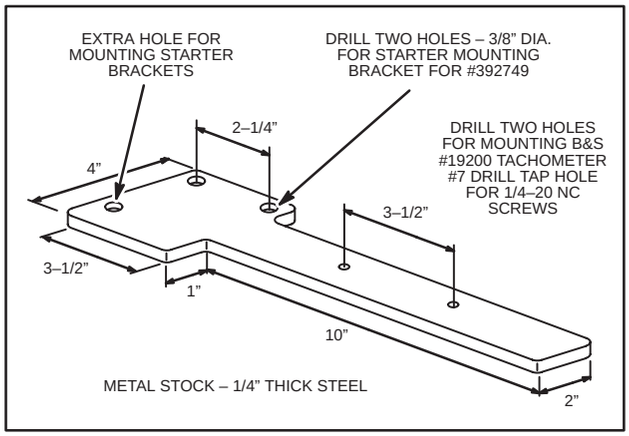

Fig. 645 – STARTER MOUNTING TEST BRACKET

A growler or armature tester is available from an Automobile Diagnostic Service supplier.

A known good 6 volt or 12 volt battery is required when testing 6 or 12 volt starting systems.

ALTERNATORS, ELECTRIC, MECHANICAL & REWIND STARTERS, STARTER-GENERATORS, (cont'd)

Brush retainers may be made from scrap pieces of rewind starter spring as shown in Fig. 646. Select the retainer required.

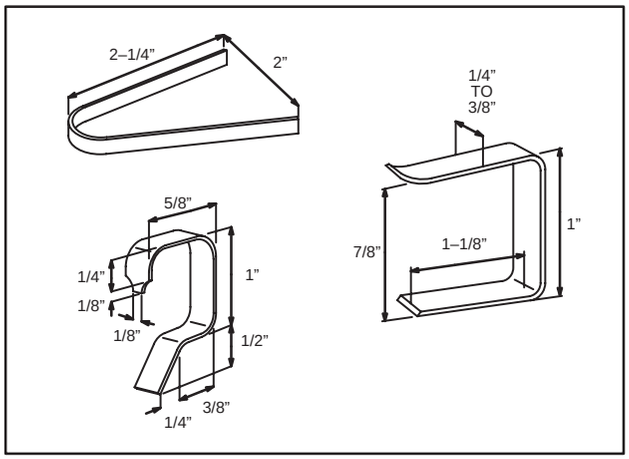

Fig. 646 – BRUSH RETAINERS

TROUBLESHOOTING 6, 12, AND 120 VOLT STARTING SYSTEMS

WARNING: Improper troubleshooting of electrical systems can lead to electric shock.

The following list is given to aid in diagnosing problems for 6, 12, and 120 volt starting systems.

NOTE: If a starting problem is encountered, the engine itself should be thoroughly checked to eliminate it as the cause of starting difficulty. Check engine for freedom of rotation by removing the spark plug and turning the crankshaft over by hand, to be sure it rotates freely.

1. Cranks Engine Slowly –

A. Additional load affecting performance.

B. Discharged battery (also, see alternators).

C. Faulty electrical connection (battery circuit).

D. Dirty or worn starter motor commutator, bearing, weak magnets, etc.

E. Worn brushes or weak brush springs.

F. Wrong oil viscosity for temperature expected.

G. Battery leads too long or wire diameter too small.

H. Incorrect AMP capacity battery (too small).

I. Extension cord longer than 25 feet (7.60 mm) (120 volt AC only).

2. Engine Will Not Crank –

A. Faulty safety interlocks.

B. Discharged or defective battery.

C. Faulty electrical connections.

D. Faulty starter motor switch (open circuit).

E. Open circuit in starter motor.

F. Defective rectifier assembly (120 Volt AC only).

G. Brushes sticking, etc.

H. Faulty solenoid.

I. Power source inoperative (wall outlet – 120 Volt AC only).

3. Starter Motor Spins; But Does Not Crank Engine –

A. Sticking pinion gear.

B. Damaged pinion or ring gear.

C. Starter motor clutch slipping.

D. Incorrect rotation due to reversed polarity (all motors rotate counterclockwise viewed from pinion gear).

4. Starter Motor Blows Fuses – (120 Volt Starter Motor Only)

A. Parasitic load

B. Shorted rectifier assembly.

C. Shorted 120 volt extension cord to starter motor.

D. Armature shorted.

E. Overloaded circuit.

5. Starter Motor Spins; Will Not Stop –

A. Defective starter switch.

B. Defective starter solenoid

ALTERNATORS, ELECTRIC, MECHANICAL & REWIND STARTERS, STARTER-GENERATORS, (cont'd)

NICKEL-CADMIUM STARTER SYSTEM MODEL SERIES 92000 110900

This Briggs & Stratton starter system consists of a starter motor and a starter switch, a wiring harness and a nickel-cadmium rechargeable battery and battery charger. When the ignition key is turned to "START," the battery supplies power to the starter motor, cranking the engine similar to the system used in an automobile. Under normal conditions, the battery will provide 40 to 60 starts before recharging is necessary.

NOTE: Some equipment manufacturers use a battery and charger of a different style than illustrated. In such cases, follow the equipment manufacturer's recommendations.

When the battery needs recharging, the charger is plugged into a 120 volt AC household outlet, and then connected to the battery. The battery will be fully charged within a 14 to 16 hour period. It is not recommended the battery be recharged if temperatures are below 40° F (4.0° C). Continuous charging may be harmful to this battery.

WARNING: Need precautions for hooking up a battery charger.

For best results, charge the battery within temperature limits of 40° F (4.0° C) to 105° F (40.0° C) and after each use of equipment. When long periods of storage are encountered, the battery should be charged overnight every two months. This type of battery will lose its charge when not in use. This will shorten battery life.

NOTE: The battery is shipped in a discharged state and must be charged 14 to 16 hours prior to its initial use.

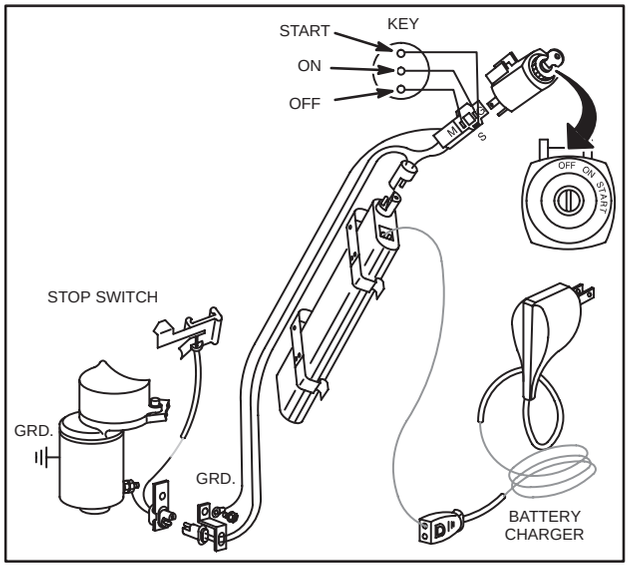

Fig. 647 – WIRING DIAGRAM

NOTE: If a starting problem is encountered, the engine itself should be thoroughly checked to eliminate it as the cause of starting difficulty. It is a good practice to check the engine for freedom of rotation by removing the spark plug and turning the crankshaft over by hand, to be sure it rotates freely.

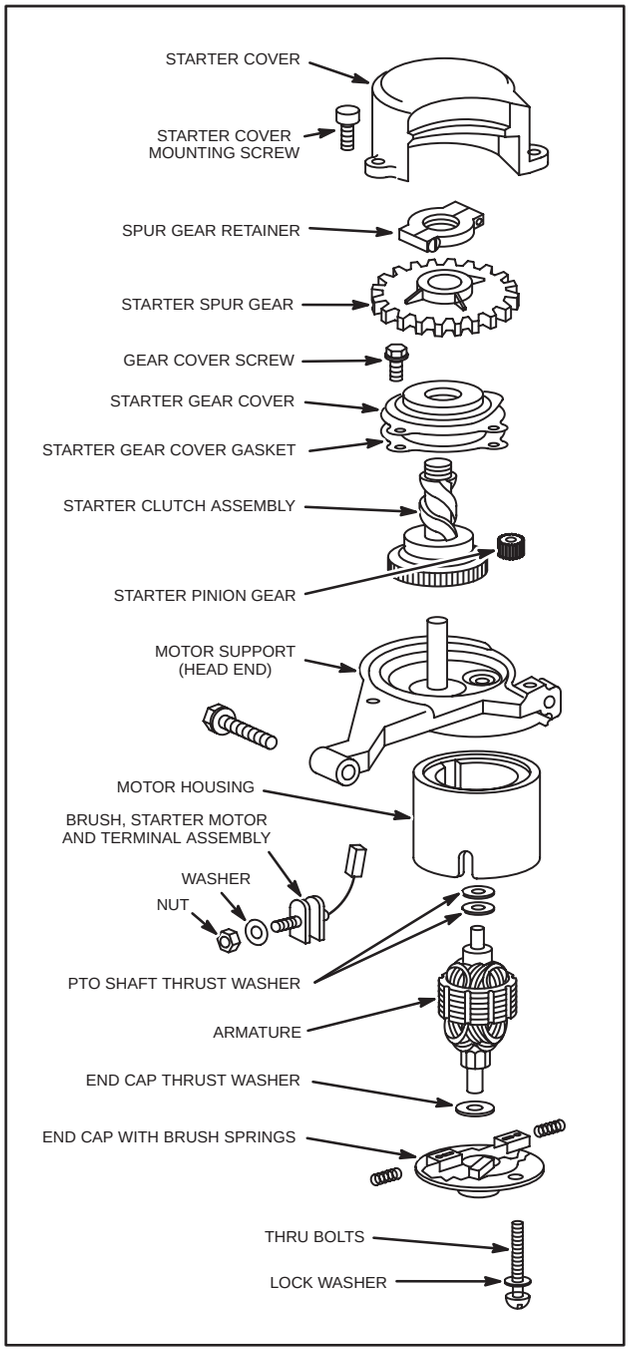

Fig. 648 – EXPLODED VIEW

ALTERNATORS, ELECTRIC, MECHANICAL & REWIND STARTERS, STARTER-GENERATORS, (cont'd)

Nickel-Cadmium Battery and Charger

NOTE: The battery must be in a fully charged condition for this test. If the battery is not fully charged, it will require charging for a 14 to 16 hour period before proceeding with this test.

The following paragraphs describe an inexpensive battery load tester and a battery charger tester which may be easily constructed.

Battery Tester

1. Briggs & Stratton Digital Multimeter (#19357 or #19390) or VOA meter (#19236).

2. Two GE sealed beam headlight bulbs #4001.

3. Make two test leads, approximately 12" long, using 16 gauge wire, with two #70 Miller alligator clips and two #62 insulators.

4. Solder the two headlights together along with test lead wires as shown in Fig. 649.

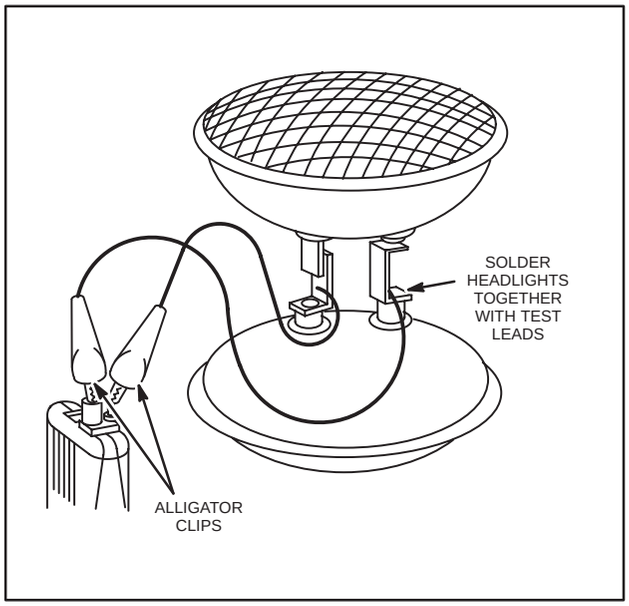

Fig. 649 – BATTERY TESTER

Battery Test

Connect Digital Multimeter as shown in Fig. 650.

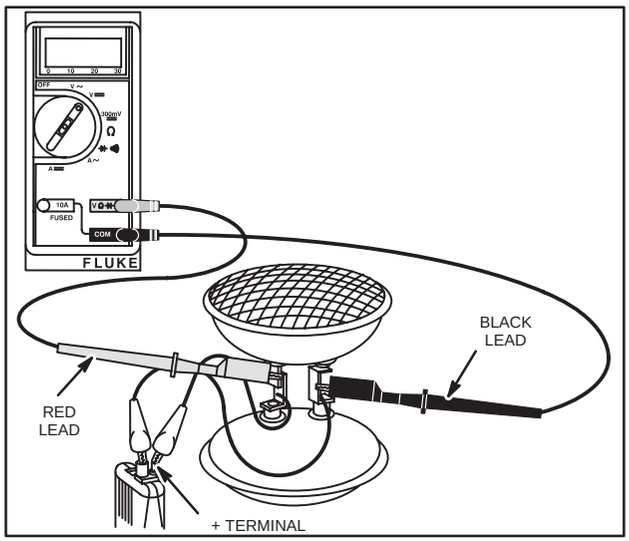

Fig. 650 – TESTING BATTERY WITH DIGITAL MULTIMETER

A fully charged battery, when connected to this headlight set-up will light the bulbs brightly for at least five minutes. The voltmeter reading should be 13.5 volts minimum after one minute, using the headlight load. A voltmeter reading of 13 volts or less, within a one minute period indicates a defective cell in the battery. Replace battery.

Battery Charger Test

The battery charger may be tested using the Digital Multimeter or the VOA meter. The test is performed with the meter in the "Diode Test" position.

CAUTION: DO NOT plug charger into AC outlet while testing. Test equipment will be damaged.

ALTERNATORS, ELECTRIC, MECHANICAL & REWIND STARTERS, STARTER-GENERATORS, (cont'd)

Test Charger Using Digital Multimeter

1. Set Digital Multimeter to "Diode Test" position.

2. Insert RED meter test lead probe into the small plug receptacle in charger plug, Fig. 651.

3. Insert BLACK meter test lead probe into the large plug receptacle in charger plug.

4. Meter should "Beep" once.

   A. If meter makes continuous tone or displays "OL," charger is defective. Replace charger.

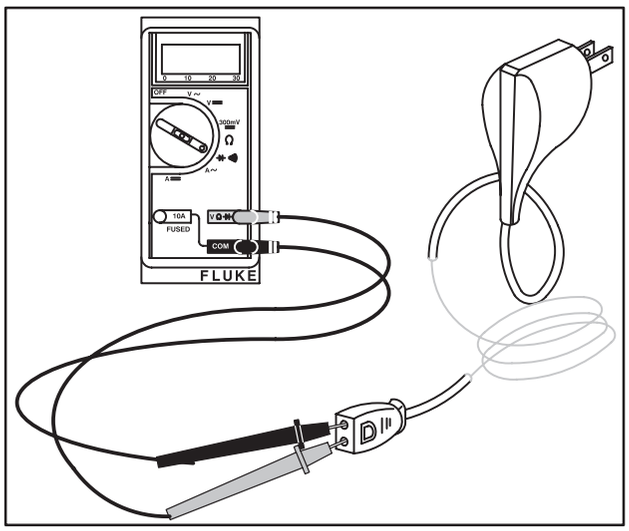

Fig. 651 – TESTING CHARGER – DMM

Key Switch Test

To test the key switch, use the Briggs & Stratton Digital Multimeter or a VOA meter.

1. Set the multimeter to the "Diode Test" position. In the "Diode Test" position the meter will emit a continuous tone, indicating continuity (complete circuit). No continuity (incomplete circuit) is displayed as "OL" and no tone will be heard.

2. Test key switch as shown in Fig. 652. Replace switch if test results differ from chart.

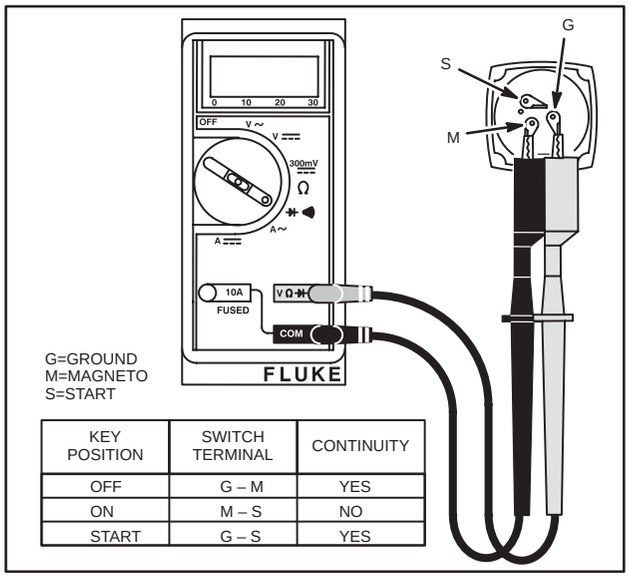

KEY POSITION	SWITCH TERMINAL	CONTINUITY
OFF	G – M	YES
ON	M – S	NO
START	G – S	YES

Fig. 652 – TESTING KEY SWITCH

Check Starter Motor Drive and Clutch

When the starter switch is activated, the nylon spur gear should rise, engage the flywheel ring gear, and crank the engine. This can be observed by removing the starter cover. If the starter motor drive does not react properly, inspect the helix and the nylon spur gear for freeness of operation. The nylon spur gear must move freely on the helix for correct starter operation, Fig. 653. If any sticking occurs, this must be corrected.

NOTE: Do not oil nylon spur gear or clutch helix.

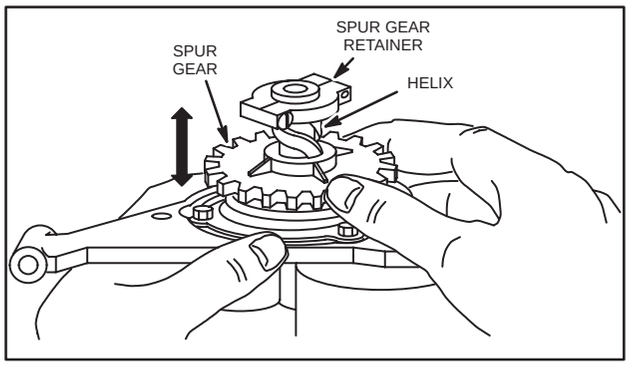

Fig. 653 – STARTER MOTOR DRIVE

The starter motor clutch is designed to prevent damage from shock loads such as an engine backfire. The clutch should not slip during normal engine cranking. This can be checked by blocking the mower blade and engaging the starter motor. If the clutch assembly slips at this time, it should be replaced.

WARNING: Ground spark plug wire using Ignition Tester, Tool #19051 or #19368, before this test.

ALTERNATORS, ELECTRIC, MECHANICAL & REWIND STARTERS, STARTER-GENERATORS, (cont'd)

Check Starter Motor

A performance test of the starter motor may be made in the following manner.

Equipment Needed

Digital Multimeter, Tool (#19357 or 19390) or VOA Meter, Tool #19236.

A tachometer capable of reading 10,000 RPM.

A fully charged battery.

WARNING: Starter motor housing contains two powerful ceramic magnets that may crack if motor housing is clamped in a vise or struck with a hammer or hard object.

1. Set the meter to read DC amps.
2. Connect the starter motor, battery and meter, as shown in Fig. 654.
3. Place the sirometer on the starter motor and activate the starter motor.

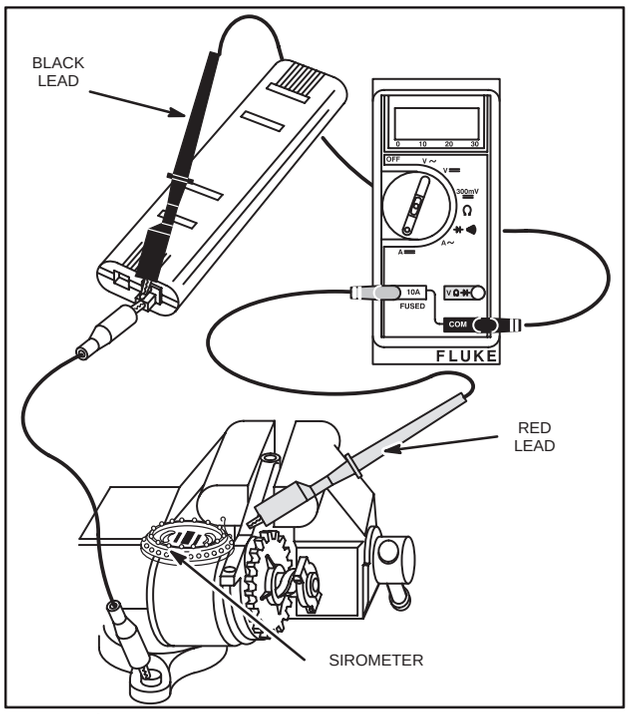

Fig. 654 – TESTING STARTER MOTOR

A starter motor in good condition will be within the following specifications.

Table No. 41
NICAD STARTER SPECIFICATIONS

Minimum Motor RPM	Maximum Amps
1000	3-1/2 (Disregard surge current)

If the starter motor does not perform satisfactorily, see "TEST INTERPRETATIONS."

Test Interpretations

1. RPM below minimum and higher than normal amps.

   A. Excessive Friction. Check for tight, dirty, or worn bearings, bent armature, misalignment of motor bearings.

   B. Shorted armature.

   C. Grounded armature.

   D. Broken magnets

ALTERNATORS, ELECTRIC, MECHANICAL & REWIND STARTERS, STARTER-GENERATORS, (cont'd)

2. Higher than normal amps and starter does not turn
   A. Direct ground of brush leads
   B. Armature can not turn, binding
3. Starter does not turn and no amps
   A. Open armature windings
4. RPM below minimum and low amps
   A. Open armature windings
   B. Burned commutator bars

Disassemble Starter Motor

WARNING: Starter motor housing contains two powerful ceramic magnets that may crack if motor housing is clamped in a vise or struck with a hammer or hard object.

1. Study Fig. 648 prior to Starter Motor Disassembly.
2. Remove the starter cover, nylon spur gear retainer and the nylon spur gear.
3. The three screws holding the gear cover and the gear itself may now be removed.
4. Lift the clutch assembly and the pinion gear off their respective shafts.
5. Remove the starter motor thru bolts, Fig. 655.

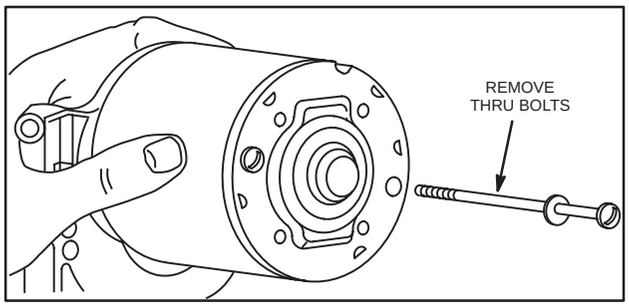

Fig. 655 – REMOVING THRU BOLTS

6. Separate motor end head from motor housing.
7. Push motor armature out through bottom of starter housing, taking care to slide rubber mounted terminal out of motor housing along with end cap, Fig. 656.

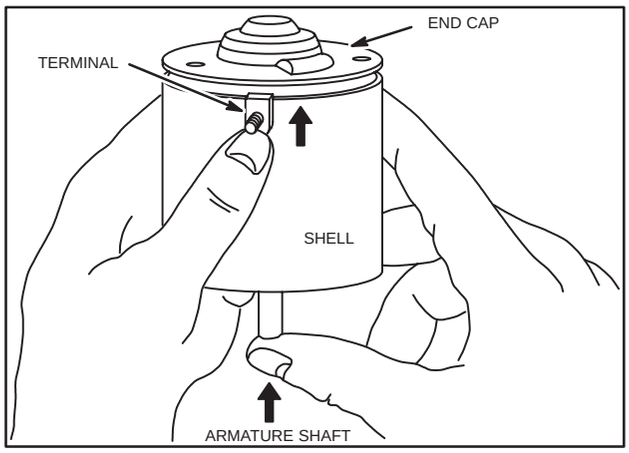

Fig. 656 – REMOVING ARMATURE

8. Before removing armature from end cap, check brushes for freedom of movement. If brushes are found to be sticking in their retainers, this must be corrected, or poor starter motor performance will result, Fig. 657.
9. If brushes are worn to a length of 1/4" (6.0 mm) or less, the brushes should be replaced.
10. Check brush springs for proper tension (sufficient force to keep brush in firm contact with commutator).

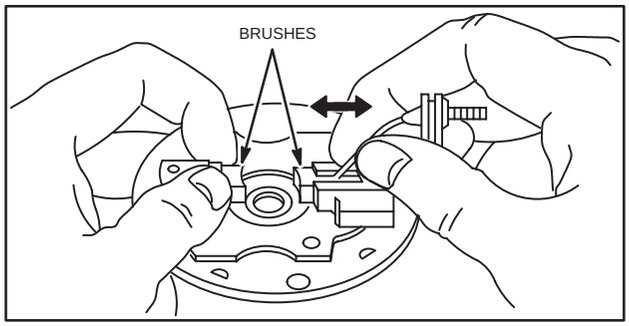

Fig. 657 – CHECKING BRUSHES

11. Clean all dirt from armature, end cap, motor support, gears, etc. The end cap bearings and armature should not be soaked in a solvent.
12. The armature commutator may be cleaned with a fine sandpaper or commutator paper.

NOTE: Do not use emery cloth, as emery will become embedded in the commutator causing rapid brush wear.

13. Slots between commutator bars may be cleaned using an aerosol spray carburetor cleaner and compressed air after sanding or machining.
14. If the armature is suspected to be defective, a new armature should be tried in the motor. If proper testing equipment is available, check the suspected armature to determine if it is defective.

ALTERNATORS, ELECTRIC, MECHANICAL & REWIND STARTERS, STARTER-GENERATORS, (cont'd)

15. Starter motor armatures have very low resistance, usually below detection on available multimeters. To check for shorted armatures, a piece of equipment known as a "growler" may be used. If this equipment is not available, a known good armature should be tried and performance rechecked.

16. If the magnets appear to be weak, a new motor housing should be tried.

Assemble Starter Motor

When all parts have been thoroughly inspected, lightly lubricate bearings with a #20 oil and reassemble in the following manner.

1. Insert brush springs and brushes in holders as far as possible, and hold them in this position with tool shown in Fig. 658.

2. Place thrust washers on armature shaft, using care to ensure brushes clear commutator.

3. Slide armature shaft into end cap bearing, Fig. 658.

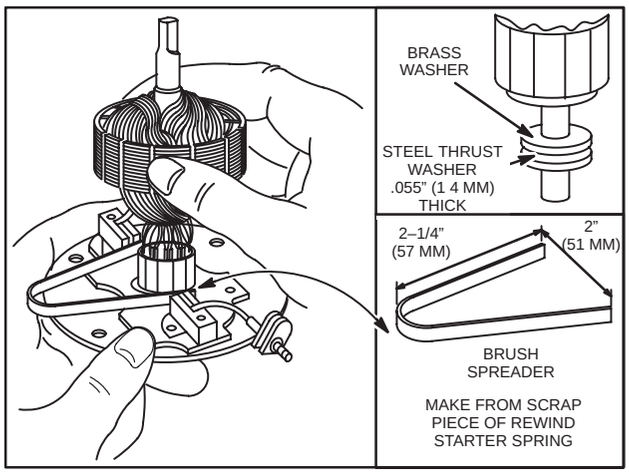

Fig. 658 – ASSEMBLING ARMATURE TO END CAP

4. Support armature shaft and slide it slowly into starter housing, as shown in Fig. 659.

5. Insert rubber mounted terminal into starter housing at this time.

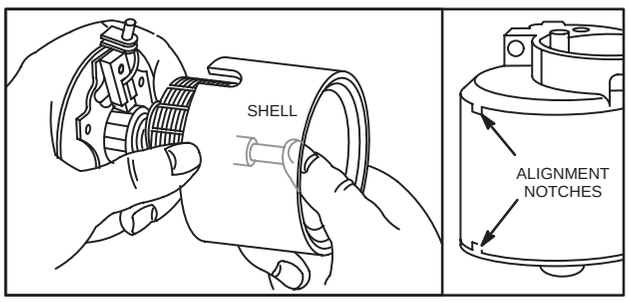

Fig. 659 – INSERTING ARMATURE

6. Place remaining thrust washers on motor PTO shaft, install end head cover and thru bolts.

7. Notches in end cap, housing and end head must be aligned, Fig. 659.

8. Notches in end cap, housing and end head must be aligned, Fig. 659.

9. Check for end play to be sure armature is free.

10. Slip pinion and starter motor clutch gear on shaft, add a small amount of gear lubricant to gears and install gear cover and gasket, Fig. 660.

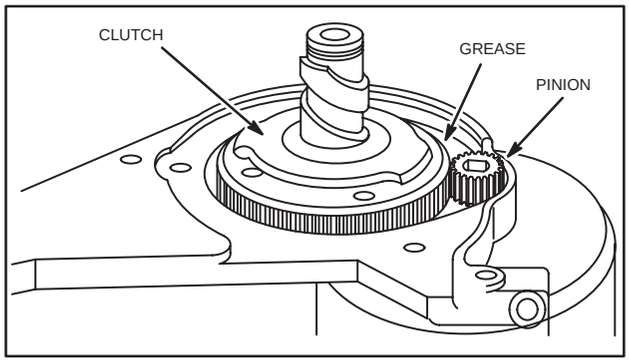

Fig. 660 – LUBRICATING GEARS

11. Tap end cap edge lightly using a soft hammer as this will align the bearings, Fig. 661.

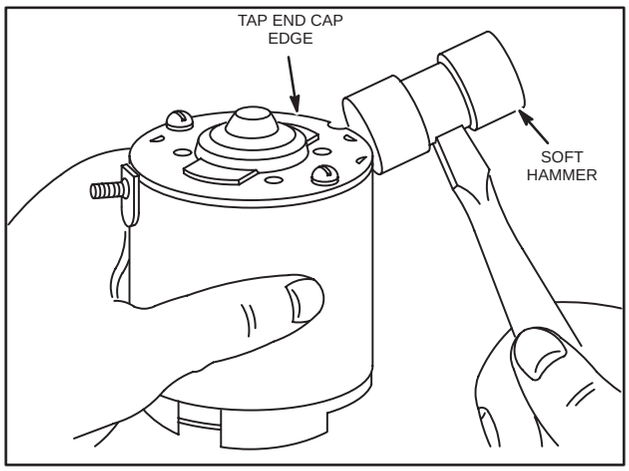

Fig. 661 – ALIGNING END CAP BEARING

12. Replace nylon spur gear and retainer assembly. Tighten retainer screws securely.

NOTE: Do not oil nylon spur gear or clutch helix.

13. Install starter cover and torque screws to 25 in. lbs. (2.8 Nm).

ALTERNATORS, ELECTRIC, MECHANICAL & REWIND STARTERS, STARTER-GENERATORS, (cont'd)

14. Install starter motor on engine. Torque rear starter mounting screw (5/16-18) to 140 in. lbs. (15.8 Nm). Torque front mounting screw (1/4-20) to 90 in. lbs. (10.0 Nm).

12 VOLT DC & 120 VOLT AC GEAR DRIVE STARTER MOTOR, MODEL SERIES 130000

This starting system uses a permanent magnet motor and gear type engagement method similar to an automobile starter. When the starter motor is activated, the pinion gear engages a ring gear attached to the engine flywheel and cranks the engine.

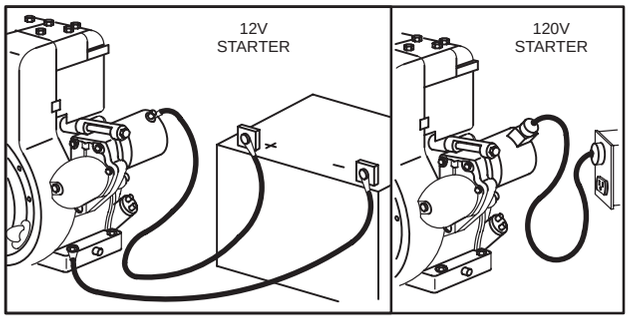

Fig. 662 – TYPICAL STARTER MOTORS

A list is given to aid you in diagnosing problems for 12 volt and 120 volt systems. See page 16.

The 120 volt electric starter is equipped with a three-prong plug for safety. The longer prong in this plug is connected to the starter motor housing. When the starter motor is plugged into the three-wire cord supplied, and the cord is plugged into a properly grounded receptacle, it will protect the user from shock should the starter-motor insulation fail for any reason. If a longer extension cord is used with this starter, it should also have three prong sockets and three hole plugs, Fig. 663.

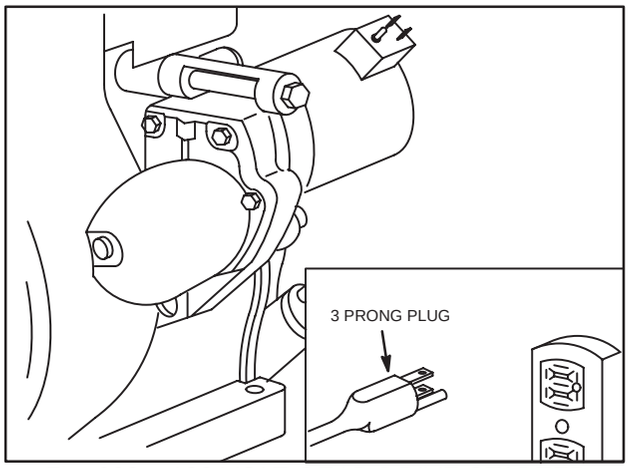

Fig. 663 – 120 VOLT GEAR DRIVE STARTER

CAUTION: DO NOT run starter motor for more than one minute without cooling 15 minutes.

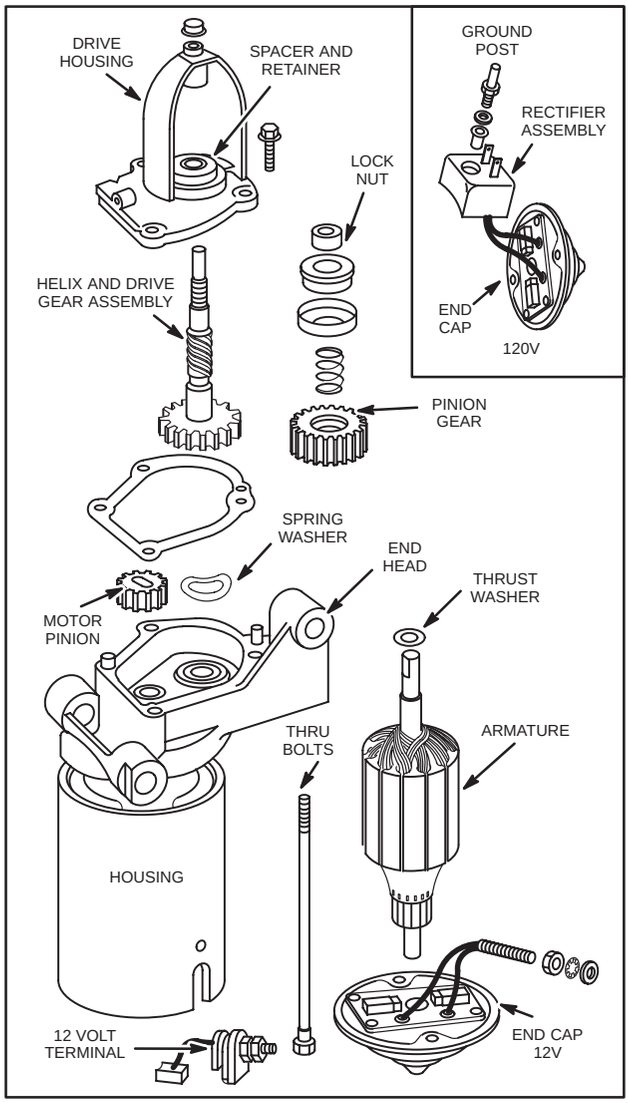

Fig. 664 – 12V & 120V STARTER MOTOR, EXPLODED VIEW

NOTE: If a starting problem is encountered, the engine itself should be thoroughly checked to eliminate it as the cause of starting difficulty. It is a good practice to check the engine for freedom of rotation by removing the spark plug and turning the crankshaft over by hand, to be sure it rotates freely.

A 12 ampere hour battery is suggested for warm temperature operation. For cold temperature operation, use no less than a 24 ampere hour battery.

ALTERNATORS, ELECTRIC, MECHANICAL & REWIND STARTERS, STARTER-GENERATORS, (cont'd)

Check Starter Motor Drive

The service procedure for the 12 volt and 120 volt starter motor drive is the same.

When the starter motor is activated, the pinion gear should engage the flywheel ring gear, and crank the engine. This action can be observed by removing the starter motor. If the starter motor drive does not react properly, inspect the helix and pinion gear for freeness of operation. The pinion gear must move freely on the helix for correct starter motor operation. If any sticking occurs, this must be corrected, Fig. 665.

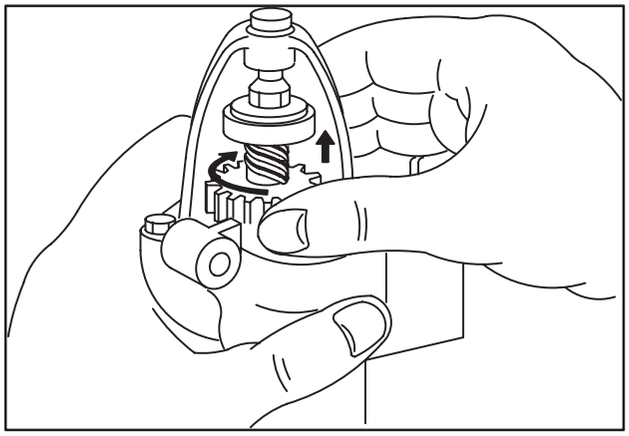

Fig. 665 – CHECKING STARTER MOTOR DRIVE

Disassemble Starter Motor Drive

1. Remove drive housing from end head, Fig. 664.
2. To remove the drive gear assembly for cleaning or replacement, clamp the drive gear in a vise having brass jaws, to prevent damage to the gear teeth.
3. The lock nut may then be removed and the starter drive disassembled for cleaning or replacement.

The pinion gear should be inspected for damaged teeth. If a sticking condition exists between the pinion gear and the helix, the parts may be washed in a solvent such as Stanisol® or Varsol®. If the sticking condition cannot be corrected by cleaning, the complete drive assembly must be replaced. Individual parts of the drive assembly are not available.

Assemble Starter Motor Drive

Reverse disassembly procedure for assembling, Fig. 666. Be sure drive spacer and retainer are correctly positioned in drive housing.

NOTE: Do not lubricate drive assembly. A dry silicone spray may be used if necessary.

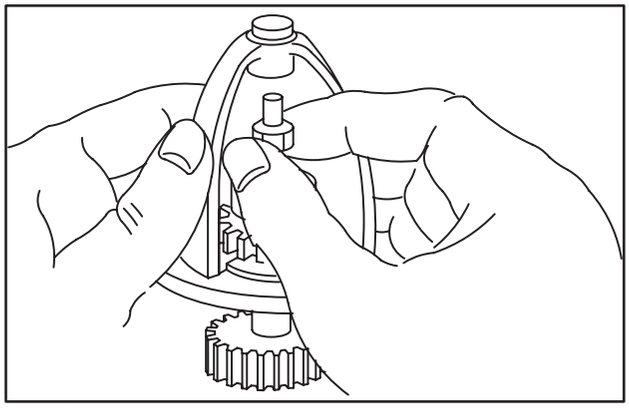

Fig. 666 – ASSEMBLING STARTER MOTOR DRIVE

Testing 12 Volt DC Starter Motor

A performance test of the 12 volt starter motor may be made in the following manner:

Equipment Needed

1. Digital Multimeter, Tool (#19357 or 19390).
2. A tachometer capable of reading 10,000 RPM.
3. A 12 volt battery ± 0.3 volts.

WARNING: Starter motor housing contains two powerful ceramic magnets that may crack if motor housing is clamped in a vise or struck with a hammer or hard object.

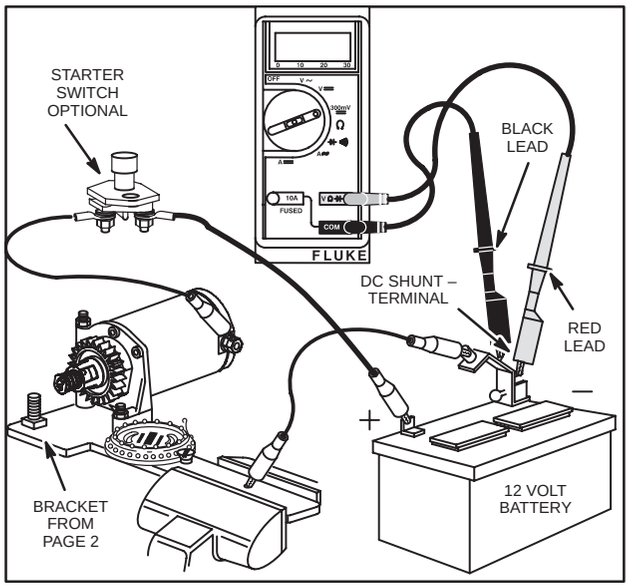

Fig. 667 – TESTING 12 VOLT STARTER MOTOR WITH DIGITAL MULTIMETER

ALTERNATORS, ELECTRIC, MECHANICAL & REWIND STARTERS, STARTER-GENERATORS, (cont'd)

1. Set the meter to read DC amps.
2. Connect the starter motor, battery and meter as shown in Fig. 667.
3. Place the sirometer on the starter motor and activate the starter motor, check specifications table 4.
4. If starter motor does not meet specification check the following and correct as necessary.
   A. Binding condition between the pinion gear, helix and drive gear assembly.
   B. Misalignment or binding of motor bearings.
   C. Brushes sticking in brush holders.
   D. Dirty or worn commutator.
5. Shorted, open or grounded armature.
   A. Shorted armature (wire insulation worn and wires touching one another) will be indicated by slow speed and high current.
   B. Open armature (wire broken) will be indicated by low or no RPM.
   C. Grounded armature (wire insulation worn and wire touching armature lamination or shaft) will be indicated by excessive current or no RPM.

Table No. 42
12 VOLT SPECIFICATIONS

Minimum Motor RPM	Maximum Amps
5600	6 (Disregard surge current)

Test 120 Volt AC Starter Motor

A performance test of the 120 volt starter motor may be made in the following manner:

Equipment Needed

Digital Multimeter, Tool (#19357 or 19390) with AC Shunt, Tool #19358 or VOA Meter, Tool #19236 with 120 Volt Adapter, Tool #19242.

A tachometer capable of reading 10,000 RPM.

WARNING: EXTREME CARE SHOULD BE USED IN MAKING THIS TEST TO MINIMIZE THE HAZARD OF ELECTRICAL SHOCK.

WARNING: Starter motor housing contains two powerful ceramic magnets that may crack if motor housing is clamped in a vise or struck with a hammer or hard object.

1. Clamp the starter motor in a vise as shown in Fig. 668.
2. Set meter to AC amps.
3. Insert leads into meter and plug starter motor cord into AC adapter.
4. Then connect AC adapter to a 120 volt outlet.
5. Refer to specifications and note the maximum allowable amperage.

Table No. 43
120 VOLT SPECIFICATIONS

Minimum Motor RPM	Maximum Amps
8300	1-1/2 (Disregard surge current)

6. Depress starter switch button. When meter reading stabilizes (approximately 3 seconds), amperage should not exceed the specification shown.

WARNING: If amperage is higher than specification shown, immediately stop the test! An amperage reading higher than number in chart indicates a shorted starter motor, which could be dangerous.

7. If amperage is within specification, check RPM of starter motor using Tool #19200, tachometer.

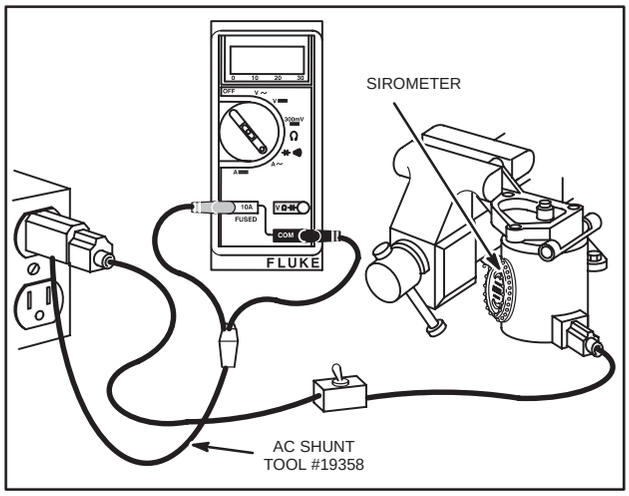

Fig. 668 – TESTING 120 VOLT STARTER MOTOR – DIGITAL MULTIMETER

ALTERNATORS, ELECTRIC, MECHANICAL & REWIND STARTERS, STARTER-GENERATORS, (cont'd)

NOTE: If the 120 volt AC starter motor does not meet the specifications listed, the motor must be replaced.

Disassemble Starter Motor, 120 Volt

WARNING: Starter motor housing contains two powerful ceramic magnets that may crack if motor housing is clamped in a vise or struck with a hammer or hard object.

1. Study Fig. 664 prior to starter motor disassembly.

NOTE: End head, end cap and housing must be placed in the same position as when removed, or interference may result, Fig. 669.

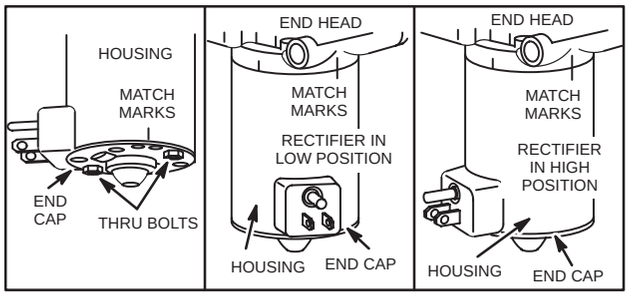

Fig. 669 – MATCH MARKS

2. Remove thru bolts, Fig. 670.

3. The end head may then be removed.

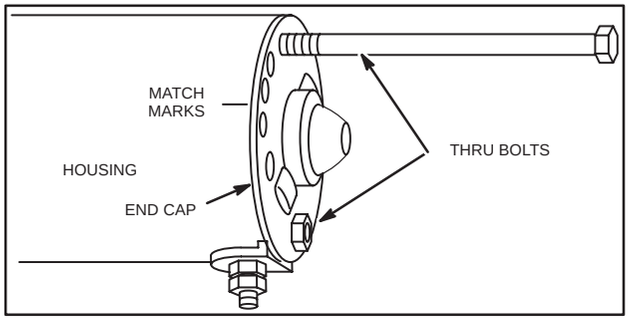

Fig. 670 – REMOVING THRU BOLTS

4. Remove armature and end cap as shown in Fig. 671.

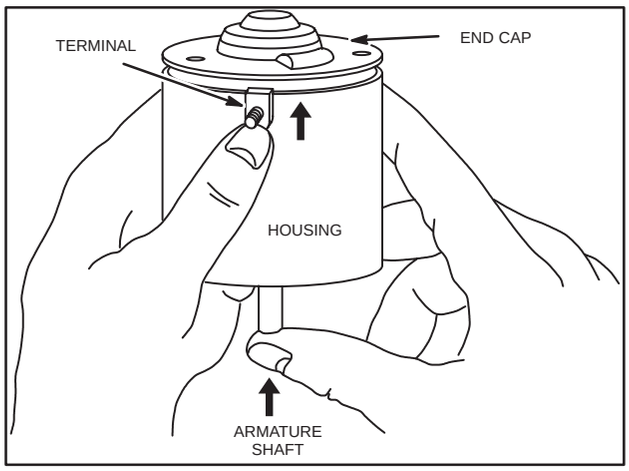

Fig. 671 – REMOVING ARMATURE

5. Clean all dirt or corrosion from the armature, end cap, end head, etc.

6. The bearings, motor housing and armature should not be soaked in a cleaning solution.

7. The armature commutator may be cleaned with a fine sand paper or commutator paper.

NOTE: Do not use emery cloth, as emery will become embedded in the commutator causing rapid brush wear.

8. If it is suspected that the armature is defective, a new armature should be tried in the motor. If proper testing equipment is available, check the suspected armature to determine if it is defective.

NOTE: Starter motor armatures have very low resistance, usually below detection on available multimeters. To check for shorted armatures, take starter to an electric motor repair facility.

9. The brushes should be checked for poor seating, weak brush springs, dirt, oil or corrosion, Fig. 672.

10. If brushes are worn less than 1/4" (6.0 mm), replace the end cap assembly.

11. If the magnets appear to be weak, a new motor housing should be tried.

ALTERNATORS, ELECTRIC, MECHANICAL & REWIND STARTERS, STARTER-GENERATORS, (cont'd)

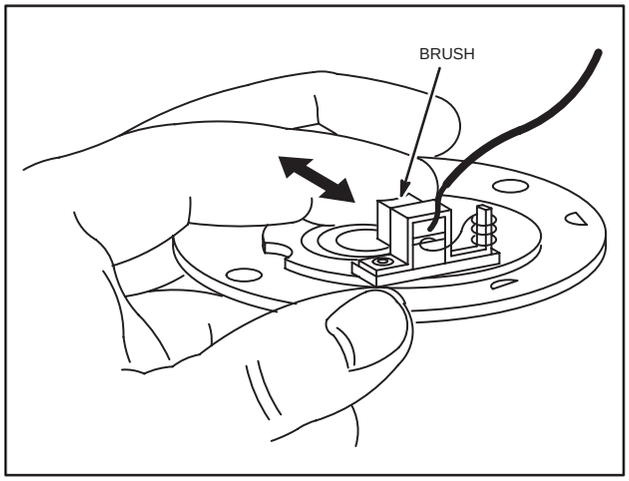

Fig. 672 – CHECK BRUSHES

Assemble Starter Motor

1. When all parts have been thoroughly inspected, lightly lubricate the bearings with #20 oil, and reassemble in the following manner.

2. Insert the brushes in their respective holders.

NOTE: Tools such as shown in Fig's. 646, page 16, and Fig. 673, this page, should be used to hold the brushes clear of the armature commutator when assembling the armature to end cap.

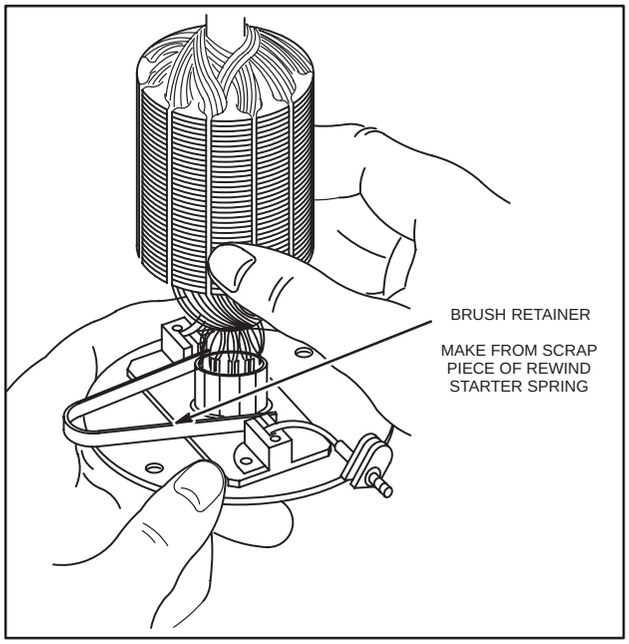

Fig. 673 – ASSEMBLING ARMATURE TO END CAP

3. Support armature shaft and slide it slowly into housing, as shown in Fig. 674.

4. Insert rubber mounted terminal into housing at this time.

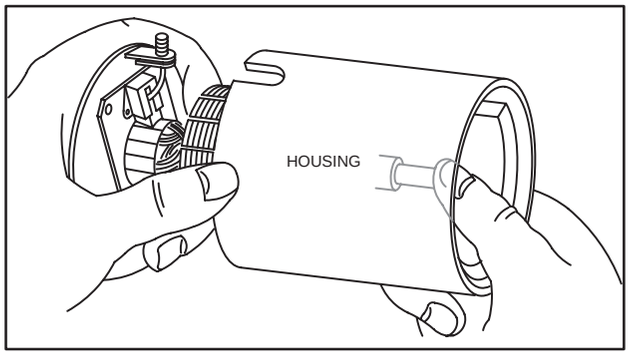

Fig. 674 – INSERTING ARMATURE

5. Place thrust washer on motor PTO shaft.

6. Install end head and thru bolts.

7. Align end cap and end head match marks correctly, Fig. 669.

8. Tighten screws.

9. Tap edge of end cap using a soft hammer to align motor bearings if required, Fig. 675.

10. Check armature shaft for end play. Armature should rotate freely.

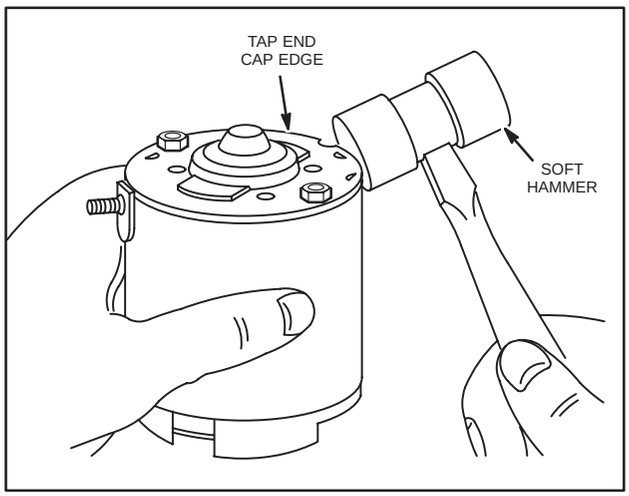

Fig. 675 – ALIGNING BEARINGS

11. Test performance of starter motor, Page 20. If starter motor tests as specified, continue assembly.

12. Slip motor pinion gear on armature shaft.

13. Add a small amount of gear lubricant to gear teeth. Position gasket, spring washer and drive housing assembly, Fig. 664.

14. Fasten drive housing to end head securely with three screws. The starter motor assembly is now ready to be installed on the engine.

ALTERNATORS, ELECTRIC, MECHANICAL & REWIND STARTERS, STARTER-GENERATORS, (cont'd)

AMERICAN BOSCH & MITSUBISHI GEAR DRIVE STARTER MOTORS

120 Volt AC; 12 Volt DC Model Series 140000, 170000, 190000

These starter motors use a gear type engagement method, similar to an automobile starter. When the starter motor is activated, the pinion gear engages a ring gear attached to the engine flywheel and cranks the engine.

WARNING: All 120 volt electric starters are equipped with a three prong plug for safety. The longer prong in this plug is connected to the starter motor housing. When the starter motor is plugged into the three wire cord supplied, and the cord is plugged into a properly grounded receptacle, it will protect the user from shock should the starter motor insulation fail for any reason. If a longer extension cord is used with this starter, it should also have three prongs and a three hole plug. DO NOT USE extension cords longer than 25 feet.

WARNING: After servicing, the 120 volt starter motor should be Hi-Pot tested before reinstalling on engine to determine if a shock hazard exists.

CAUTION: DO NOT run starter motor for more than one minute without cooling 15 minutes.

It is recommended a battery of 32 ampere hour capacity be used with the 12 volt starter. The battery cable size should be #4 or #6.

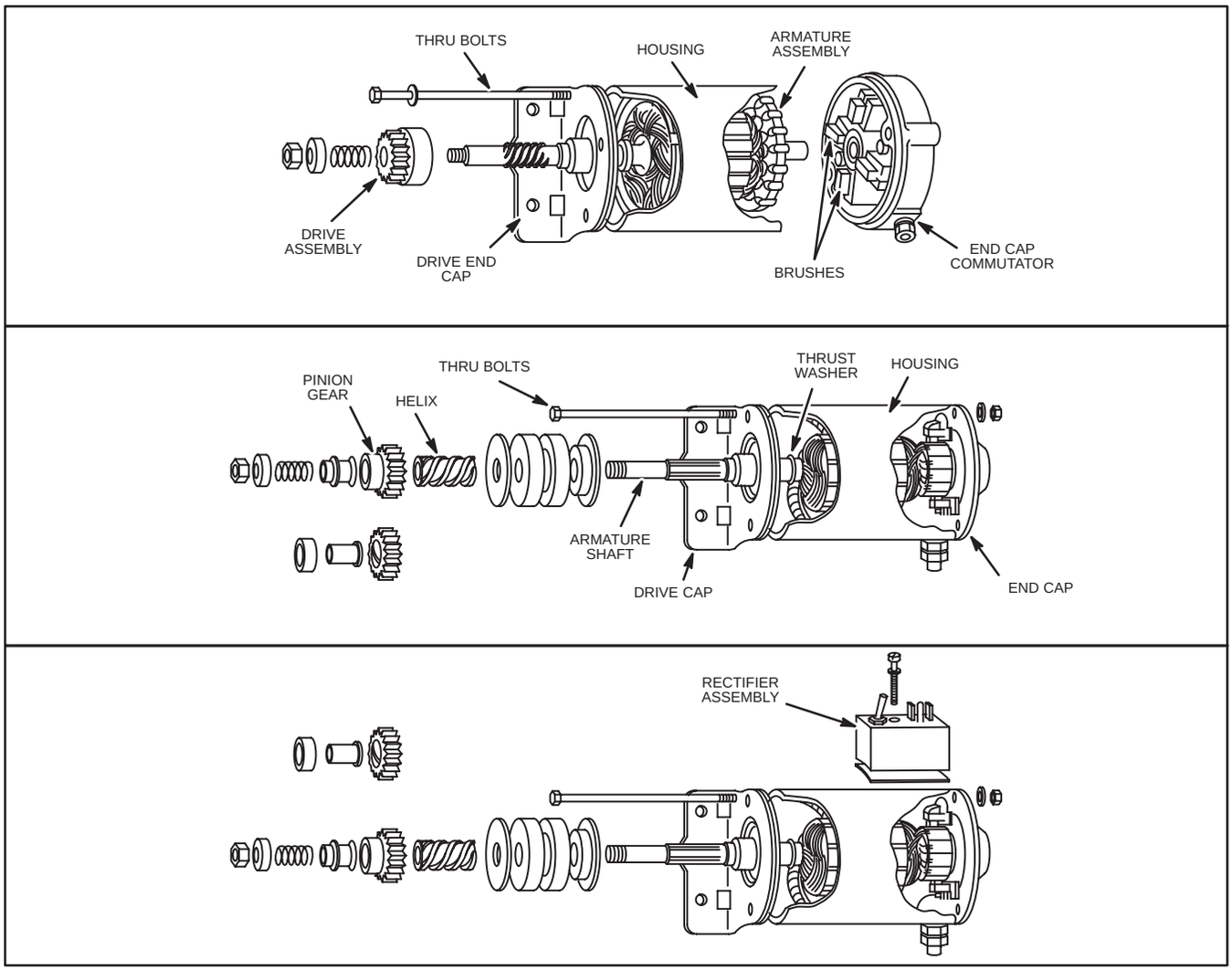

Fig. 676 – STARTER MOTORS (EXPLODED VIEWS)

ALTERNATORS, ELECTRIC, MECHANICAL & REWIND STARTERS, STARTER-GENERATORS, (cont'd)

Replacing Ring Gear

To replace a worn or damaged flywheel ring gear, see page 29, Fig. 677.

Replace Ring Gear

All Briggs & Stratton starter motors use an aluminum ring gear on the flywheel.

To replace a worn or damaged flywheel ring gear, proceed as follows:

NOTE: These starter motors use a steel pinion gear with a steel flywheel ring gear. Use only steel pinion gear with steel ring gear.

WARNING: DO NOT strike flywheel with a hard object or metal tool as this may cause flywheel to shatter in operation, causing personal injury or property damage.

Mark the center of the rivets holding the ring gear to flywheel, with a center punch. Drill out the rivets using a 3/16" drill. Clean holes after drilling, Fig. 677.

Attach new gear to flywheel using four screws and lock nuts provided with gear.

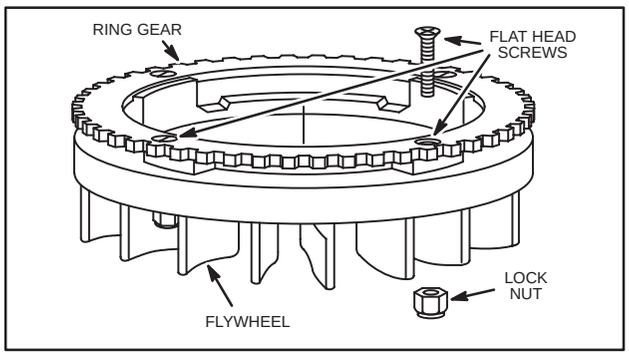

Fig. 677 – REPLACING RING GEAR

Check Starter Motors

If a starting problem is encountered, check the engine thoroughly to be sure it is not the cause of starting difficulty. It is a good practice to remove the spark plug and rotate the crankshaft by hand, to be sure it rotates freely. Any belt, clutch or other parasitic load will affect cranking performance.

Service procedures for both the 12 volt and 120 volt starter motors are similar and will be covered together, except where noted otherwise.

A list is provided to aid in diagnosing problems for 12 volt DC and 120 volt AC systems.

Test Interpretations

1. RPM below minimum and higher than normal amps.
   - A. Excessive Friction. Check for tight, dirty, or worn bearings, bent armature, misalignment of motor bearings.
   - B. Shorted armature.
   - C. Grounded armature.
   - D. Broken magnets
2. Higher than normal amps and starter does not turn.
   - A. Direct ground of brush leads
   - B. Armature can not turn, binding.
3. Starter does not turn and no amps.
   - A. Open armature windings.
4. RPM below minimum and low amps.
   - A. Open armature windings.
   - B. Burned commutator bars.

Check Starter Motor Drive

When the starter motor is activated, the pinion gear should engage the flywheel ring gear and crank the engine. This action can be observed by removing the starter shield. If the starter motor drive does not react properly, inspect the helix and pinion gear for freeness of operation. The pinion must move freely on the helix for proper starter motor operation. If any sticking occurs, this must be corrected, Fig. 678.

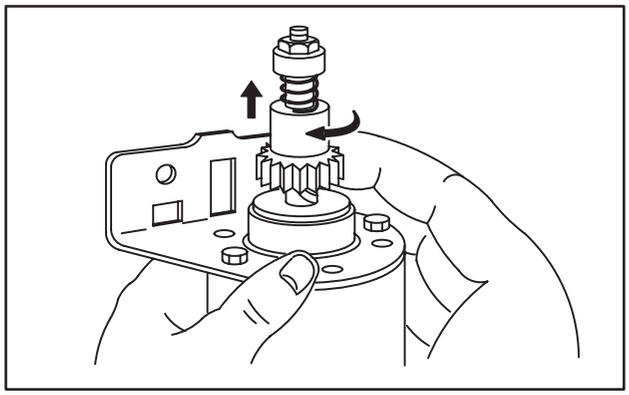

Fig. 678 – CHECKING STARTER MOTOR DRIVE

ALTERNATORS, ELECTRIC, MECHANICAL & REWIND STARTERS, STARTER-GENERATORS, (cont'd)

Disassemble Starter Motor Drive

To remove the drive assembly for cleaning or replacement, clamp the pinion gear in a vise having brass jaws, to prevent damage to the gear teeth. The lock nut may then be removed and the starter drive disassembled for cleaning or replacement.

The pinion gear should be inspected for damaged teeth. If a sticking condition exists between the pinion gear and the helix, the parts may be washed in a solvent such as Stanisol® or Varsol®. If the sticking condition is not corrected by cleaning, the complete drive assembly must be replaced. Individual parts of the drive assembly are not available.

WARNING: DO NOT clean parts with gasoline

Assemble Starter Motor Drive

Reverse disassembly procedure for assembling. When assembling helix to shaft, the spline must face threaded end of shaft, Fig. 679. Torque lock nut to 170 in. lbs. This torque has an effect on pinion travel, so proper torque should be maintained.

NOTE: Do not lubricate drive assembly. If sticking occurs during freezing weather, use only a dry silicone spray on helix.

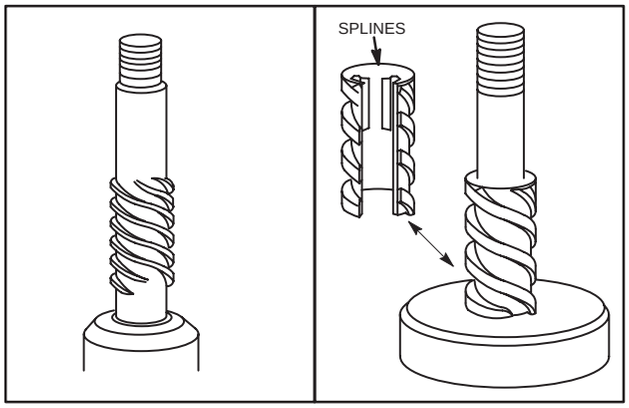

Fig. 679 – ASSEMBLING STARTER MOTOR DRIVE

A performance test of the 120 volt starter motor may be made in the following manner:

Test 12 Volt Starter Motor

A performance test of the 12 volt DC and 120 volt AC starter motors may be made in the following manner:

Equipment Needed

See page 15 for a starter mounting test bracket that can be made.

Digital Multimeter, Tool (#19357 or #19390) and DC Shunt, Tool #19359 or VOA Meter, Tool #19236 and DC Shunt.

See Instruction Manual MS-6574 (Digital Multimeter) or Instruction Manual MS-7585 (VOA Meter) for installation procedure.

Tachometer capable of reading 10,000 RPM.

A 12 volt battery ± 0.3 volts.

NOTE: A 6 volt battery is required in some instances for test purposes only. This allows RPM readings to be made on a lower scale. See Table No. 44.

To Test

1. Set the meter to read 300mV ⎓ (DC AMPS).
2. Connect the starter motor, battery and meter as shown in Fig's. 680 or 681.

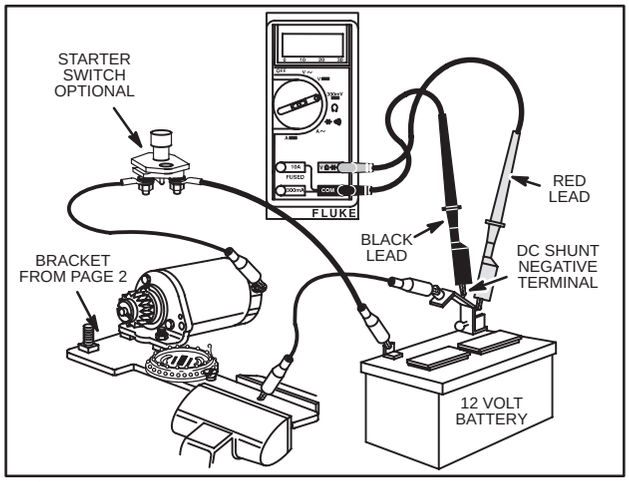

Fig. 680 – TESTING 12 VOLT STARTER MOTOR DIGITAL MULTIMETER

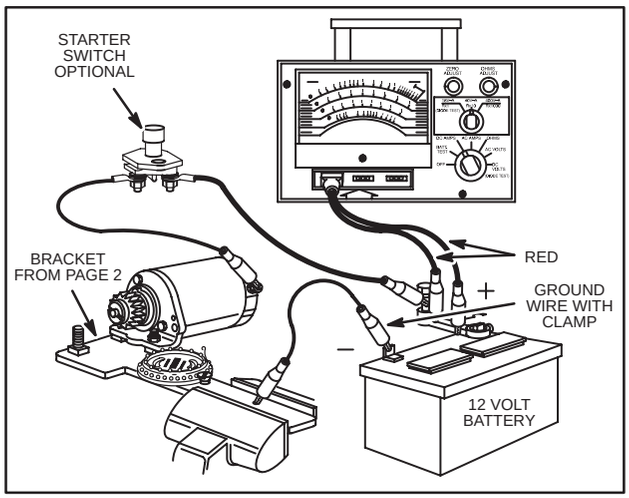

Fig. 681 – TESTING 12 VOLT STARTER MOTOR VOA METER

ALTERNATORS, ELECTRIC, MECHANICAL & REWIND STARTERS, STARTER-GENERATORS, (cont'd)

3. Activate the starter motor and note readings of meter and tachometer (RPM). A starter motor in good condition will be within specifications listed in Table No. 44. Disregard surge current.

If the 12 volt starter motor does not perform satisfactorily, see list on page 29 to aid in diagnosing problems.

Table No. 44
12 VOLT STARTER MOTOR PERFORMANCE CHART

Starter Motor Identification	Voltage Required	Minimum Motor RPM	Maximum Amps	VOA Meter Scale
American Bosch SME-12A-8	6V ± 0.1	5000	25	40 V-A R x 10
American Bosch SMH-12A-11	12V ± 0.3	4800	16	16 V-A R x 1
American Bosch 01965-23-MO-30-SM	12V ± 0.3	5500	16	16 V-A R x 1
Mitsubishi MMO-4FL MMO-5ML MOO1TO2271	6V + 0.1	6700	16	16 V-A R x 1

Testing the 120 Volt AC Starter Motor

A performance test of the 120 volt starter motor may be made in the following manner:

Equipment Needed

See page 16 for a starter mounting test bracket that can be made.

Digital Multimeter, Tool #19357 with AC shunt, Tool #19358.

A performance test of the 120 volt starter motor may be made in the following manner:

Testing 12 Volt Starter Motor

A performance test of the 12 volt DC and 120 volt AC starter motors may be made in the following manner:

Equipment Needed

See page 16 for a starter mounting test bracket that can be made.

1. Digital Multimeter, Tool #19357 and DC Shunt, Tool #19359 <u>or</u> VOA Meter, Tool #19236 and DC Shunt.

See Instruction Manual MS-6574 (Digital Multimeter) or Instruction Manual MS-7585 (VOA Meter) for installation procedure.

2. Tachometer capable of reading 10,000 RPM.
3. A 12 volt battery ± 0.3 volts.
4. A 6 volt battery is required in some instances for test purposes only. This allows RPM readings to be made on a lower scale. See Table No. 44.

To Test

1. Set the meter to read DC amps.
2. Connect the starter motor, battery and meter as shown in Fig's. 680 or 681.

Testing the 120 Volt AC Starter Motor

A performance test of the 120 volt starter motor may be made in the following manner:

Equipment Needed

1. See page 15 for a starter mounting test bracket that can be made.
2. Digital Multimeter, Tool #19357 with AC shunt, Tool #19358.
3. VOA meter, Tool #19236 with 120 Volt Adapter, Tool #19242.
4. A tachometer capable of reading 10,000 RPM.

WARNING: Extreme care should be used in making this test to minimize the hazard of electrical shock.

WARNING: Starter motor housing contains two powerful ceramic magnets that may crack if motor housing is clamped in a vise or struck with a hammer or hard object.

ALTERNATORS, ELECTRIC, MECHANICAL & REWIND STARTERS, STARTER-GENERATORS, (cont'd)

To Test

1. Clamp the starter motor test bracket in a vise as shown in Fig's. 682 or 683.
2. Set meter to AC amps.
3. Insert leads into meter and plug starter motor cord into AC adapter.
4. Then connect AC adapter to a 120 volt outlet.
5. Refer to Table 7 and note the maximum allowable amperage.

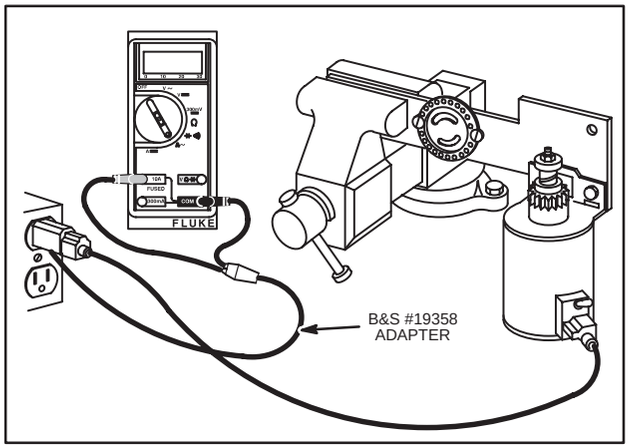

Fig. 682 – TESTING 120 VOLT STARTER MOTOR DIGITAL MULTIMETER

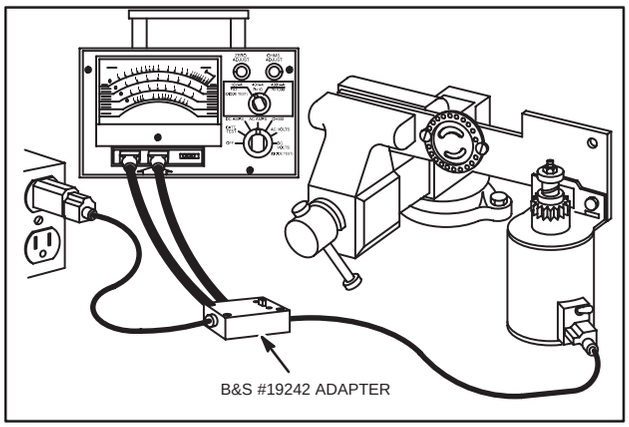

Fig. 683 – TESTING 120 VOLT STARTER MOTOR VOA METER

6. Depress starter switch button. When meter reading stabilizes (approximately 3 seconds), amperage should not exceed the specification shown.

WARNING: If amperage is higher than specification shown, immediately stop the test! An amperage reading higher than number in chart indicates a shorted starter motor, which could be dangerous.

7. If amperage is within specification, check RPM of starter motor.

Table No. 45
120 VOLT STARTER MOTOR PERFORMANCE CHART

Starter Motor Identification	Voltage Required	Minimum Motor RPM	Maximum Amperes
Amer. Bosch SME-110-C3 SME-110-C6 SME-110-C8	120	7400	3-1/2
Amer. Bosch 06026-28-M030SM	120	7400	3
Mitsubishi J282188	120	7800	3-1/2

If the 120 volt starter motor does not meet these specifications, it must be replaced.

Disassemble Starter Motor

Remove the lockwasher, nuts and thru bolts, Fig. 684. The armature, drive cap and gear drive can now be removed as an assembly.

NOTE: THRU BOLTS AND NUTS MUST BE PLACED IN THE SAME POSITION AS WHEN REMOVED OR INTERFERENCE MAY RESULT.

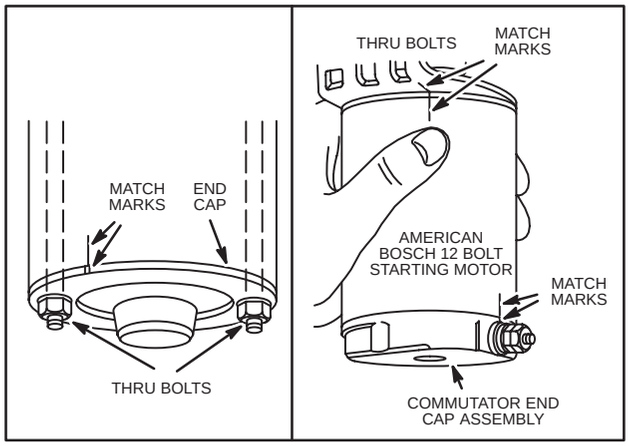

Fig. 684 – REMOVING THRU BOLTS

WARNING: Do not clamp the motor in a vise or strike the motor with a hammer. Some motors include two powerful ceramic magnets which can be broken or cracked if the motor housing is deformed or dented.

To remove the commutator end cap, lift the brush springs and slide brushes out of the brush holders.

ALTERNATORS, ELECTRIC, MECHANICAL & REWIND STARTERS, STARTER-GENERATORS, (cont'd)

Clean all dirt or corrosion from the armature, commutator end cap, drive end cap, etc. The bearings, housing and armature should not be soaked in a cleaning solution. The armature commutator may be cleaned with a fine sand paper. Do not use emery cloth as emery will become embedded in the commutator causing rapid brush wear. If it is suspected that the armature, field coil or motor housing is defective, new parts should be tried in the motor.

If proper testing equipment is available, check the suspected armature or field coil to determine if it is defective. The brushes should be checked for proper seating, weak brush springs, dirt, oil or corrosion. Also check to be sure brushes are not sticking in their respective brush holders, Fig. 685.

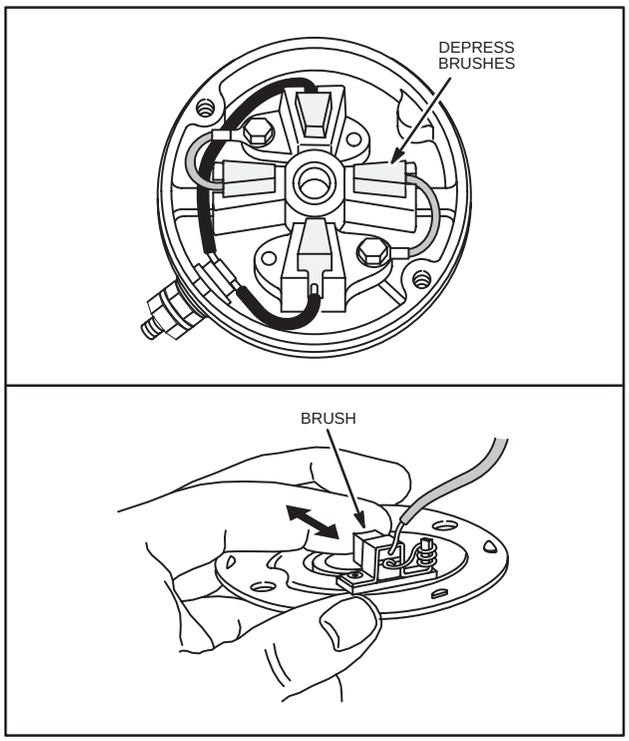

Fig. 685 – CHECKING BRUSHES

Assemble Starter Motor

When all parts have been thoroughly inspected, lightly lubricate the bearings with #20 oil and reassemble in the following manner.

Insert the brushes in their respective holders.

NOTE: A tool such as shown in Fig. 646 should be used to hold the brushes clear of the armature commutator when assembling the commutator end cap to the motor housing, Fig's. 686 and 687.

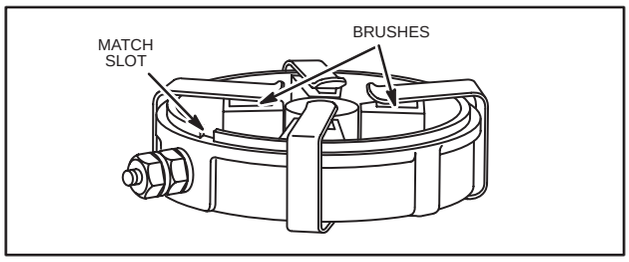

Fig. 686 – INSERTING BRUSHES

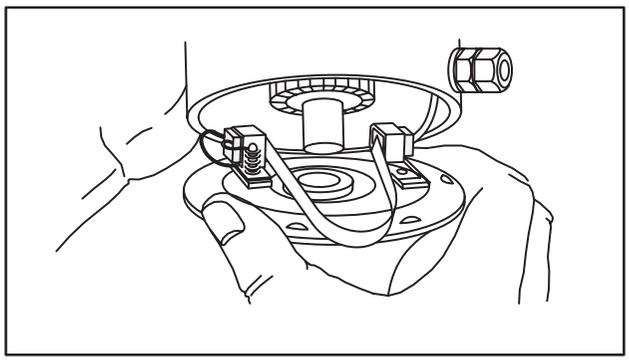

Fig. 687 – INSTALLING END CAP

Slide the armature into the motor housing, being sure to match the drive end cap keyway to the stamped key in motor housing. Assemble end cap, again matching the keyway to key in housing. Care should be used to prevent damage to ceramic magnets, where used.

Assemble thru bolts, lockwashers and nuts.

NOTE: THRU BOLTS AND NUTS MUST BE PLACED IN THE SAME POSITION AS WHEN REMOVED OR INTERFERENCE MAY RESULT.

After assembly of the starter motor drive, the starter motor is now ready for installation to the engine.

BRIGGS & STRATTON GEAR DRIVE STARTER MOTORS

120 Volt AC; 12 Volt DC with Housings 3–1/16" (78.0 MM) to 4–9/16" (115.9 MM) long, Model Series 170000, 190000, 220000, 240000, 250000, and 320000

WARNING: All 120 volt electric starters are equipped with a three prong plug for safety. The longer prong in this plug is connected to the starter motor housing. When the starter motor is plugged into the three wire cord supplied, and the cord is plugged into a properly grounded receptacle, it will protect the user from shock should the starter motor insulation fail for any reason. If a longer extension cord is used with this starter, it should also have three prongs and a three hole plug.

ALTERNATORS, ELECTRIC, MECHANICAL & REWIND STARTERS, STARTER-GENERATORS, (cont'd)

Both starter motors use a gear type engagement method, similar to an automobile starter. When the starter motor is activated, the pinion gear engages a ring gear attached to the engine flywheel and cranks the engine.

These battery size recommendations are based on minimum temperature expected and correct weight of oil being used. See Section 8.

30 Amp. Hr. +20° F (-6.65 C) or higher
40 Amp. Hr. –5° F (-20.55 C) or higher
50 Amp. Hr. –15° F (-26.15 C) or higher

These cable sizes are based on total length of cable from battery positive post to starter switch or solenoid, and to starter plus ground return to battery negative post.

#6 AWG – 4 ft. (1.2 M) or less
#5 AWG – 5 ft. (1.5 M) or less
#4 AWG – 6 ft. (1.8 M) or less

Briggs & Stratton starter motors use either an aluminum or plastic ring gear on the flywheel.

To replace a worn or damaged flywheel ring gear, proceed as follows:

If a starting problem is encountered, check the engine thoroughly to be sure it is not the cause of starting difficulty. It is a good practice to remove the spark plug and rotate the crankshaft by hand, to be sure it rotates freely. Any belt, clutch or other parasitic load will affect cranking performance.

A list is provided to aid in diagnosing problems for 12 volt DC and 120 volt AC systems. See page 3.

The early style is protected by a plastic cap over the drive assembly. Carefully remove the plastic cap from the cup using two screwdrivers, Fig. 693.

The pinion gear should be inspected for damaged teeth. If a sticking condition exists between the pinion gear and the helix, this must be corrected. The parts may be washed in a solvent such as Stanisol® or Varsol®.

A performance test of the 12 volt DC and 120 volt AC starter motors may be made in the following manner.

See page 15 for a starter mounting test bracket that can be made.

If either the 12 or the 120 volt starter motor does not perform satisfactorily, the following should be checked and corrected if necessary:

BRUSHES MUST MOVE FREELY IN HOLDERS!

The AC control assembly housing contains a spring loaded starter button, cord assembly and rectifier. It is equipped with a three wire grounded receptacle. Fig. 703. The test procedure for checking the rectifier control assembly is as follows:

When re-assembling switch, position starter button and return spring as noted in Fig. 703.

With the starter motor and controller disassembled, the cord assembly may be tested for continuity using the Digital Multimeter or with the VOA meter.

This design of starter housing has a large notch which indexes over the insulated terminal, Fig. 714.

WARNING: DO NOT USE extension cords longer than 25 feet (7.6 M).

Both starter motors use a gear type engagement method, similar to an automobile starter. When the starter motor is activated, the pinion gear engages a ring gear attached to the engine flywheel and cranks the engine.

WARNING: After servicing, the 120 volt starter motor should be Hi-Pot tested by an electric motor repair shop before reinstalling on engine to determine if a shock hazard exists.

Table No. 46
BRIGGS & STRATTON
STARTER MOTOR IDENTIFICATION

Housing Length "L"	Motor Voltage
3–1/16" (78.0 MM)	12
3–1/2" (89.0 MM)	120
3–21/32" (93.0 MM)	12
3–3/4" (95.0 MM)	12
3–13/16" (97.0 MM)	12
4–1/2" (111.0 MM)	12
4–9/16" (115.9 MM)	12

ALTERNATORS, ELECTRIC, MECHANICAL & REWIND STARTERS, STARTER-GENERATORS, (cont'd)

Battery Cable Recommendations

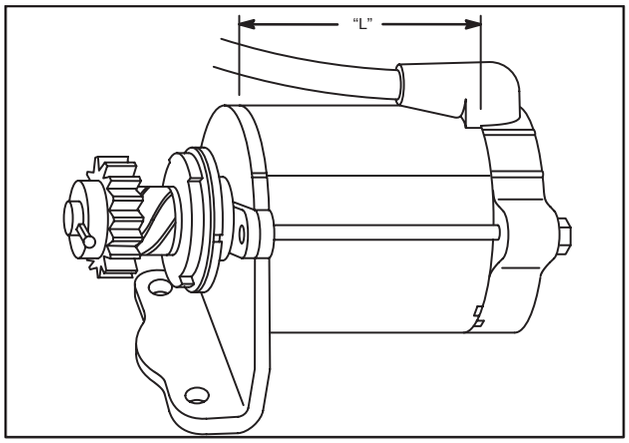

Fig. 688 – 120 VOLT AC STARTER MOTOR

CAUTION: DO NOT run starter motors for more than one minute without cooling 15 minutes.

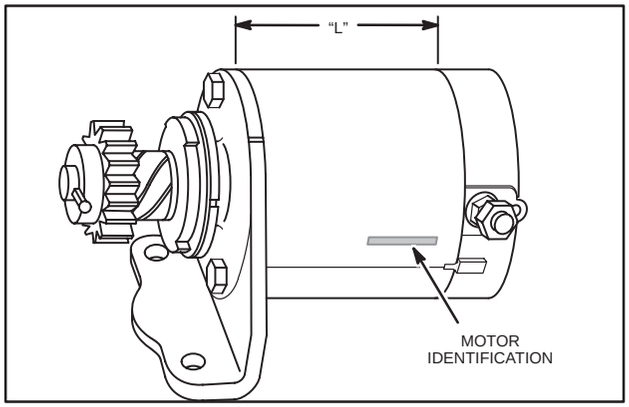

Fig. 689 – TYPICAL 12 VOLT DC STARTER MOTOR

Battery Recommendations

These battery size recommendations are based on minimum temperature expected and correct weight of oil being used. See Section 8.

30 Amp. Hr. +20° F (-6.65 C) or higher
40 Amp. Hr. –5° F (-20.55 C) or higher
50 Amp. Hr. –15° F (-26.15 C) or higher

Battery Cable Recommendations

These cable sizes are based on total length of cable from battery positive post to starter switch or solenoid, and to starter plus ground return to battery negative post.

#6 AWG – 4 ft. (1.2 M) or less
#5 AWG – 5 ft. (1.5 M) or less
#4 AWG – 6 ft. (1.8 M) or less

NOTE: A battery of higher amperage may be required for extremely cold weather starting conditions.

Replace Ring Gear

Briggs & Stratton starter motors use either an aluminum or plastic ring gear on the flywheel.

To replace a worn or damaged flywheel ring gear, proceed as follows:

WARNING: DO NOT strike flywheel with a hard object or metal tool as this may cause flywheel to shatter in operation, causing personal injury or property damage.

1. Mark the center of the rivets holding the ring gear to flywheel, with a center punch.
2. Drill out the rivets using a 3/16" (5.0 mm) drill.
3. Clean holes after drilling, Fig. 690.

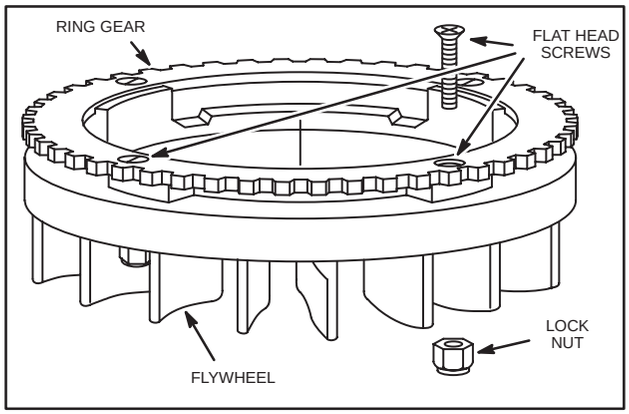

Fig. 690 – REPLACING RING GEAR

4. Attach new gear to flywheel using four screws and lock nuts provided with gear.

Check Engine

If a starting problem is encountered, check the engine thoroughly to be sure it is not the cause of starting difficulty. It is a good practice to remove the spark plug and rotate the crankshaft by hand, to be sure it rotates freely. Any belt, clutch or other parasitic load will affect cranking performance.

A list is provided to aid in diagnosing problems for 12 volt DC and 120 volt AC systems. See page 3.

ALTERNATORS, ELECTRIC, MECHANICAL & REWIND STARTERS, STARTER-GENERATORS, (cont'd)

Disassemble Starter Motor Drive, Roll Pin Retainer Style

1. Disconnect and remove starter from engine.
2. Place in "V" block as shown in Fig. 691.
3. Drive the roll pin out with a hammer and 1/8" (3.0 mm) diameter punch to remove the retainer.

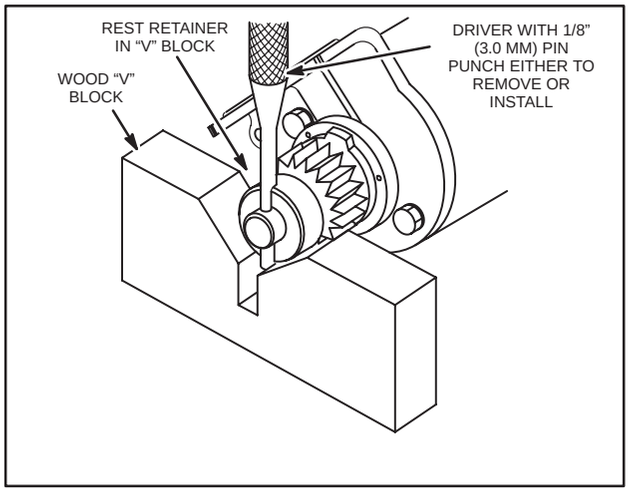

Fig. 691 – DISASSEMBLING STARTER MOTOR DRIVE

NOTE: Some starter drive assemblies utilize a gear return spring. Two (2) styles of returns have been used, current style, Fig. 692 and early style, Fig. 693. The current style is removed after removing the roll pin, Fig. 691.

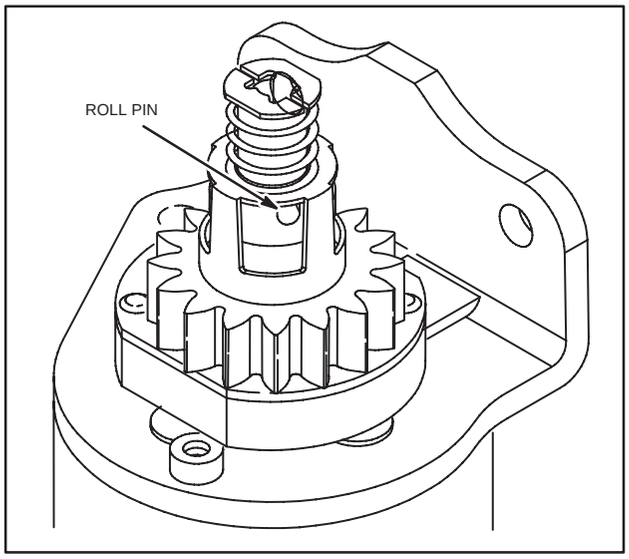

Fig. 692 – CURRENT STYLE SPRING RETURN

The early style is protected by a plastic cap over the drive assembly. Carefully remove the plastic cap from the cup using two screwdrivers, Fig. 693.

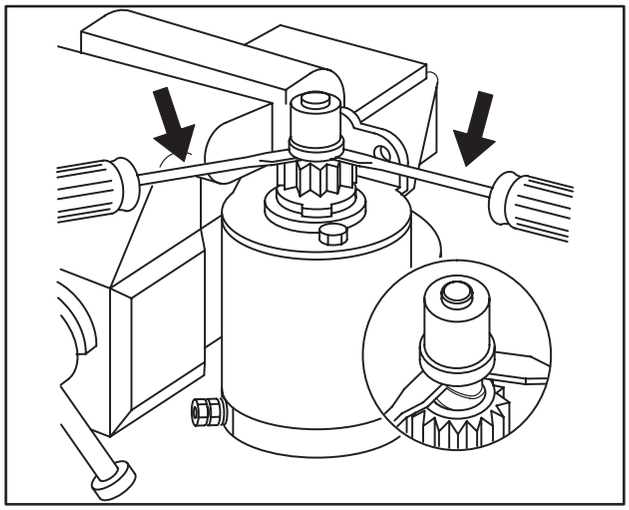

Fig. 693 – REMOVING CAP ASSEMBLY (SOME MODELS)

The pinion gear should be inspected for damaged teeth. If a sticking condition exists between the pinion gear and the helix, this must be corrected. The parts may be washed in a solvent such as Stanisol® or Varsol®.

Assemble Starter Motor Drive, Roll Pin Retainer Type

1. Assemble pinion gear with beveled edge on the gear up as shown in Fig. 694.
2. Assemble cup and spring on gear if original assembly was so equipped.
3. Drive new roll pin through retainer slot and armature shaft hole. The roll pin should be centered in shaft within 1/32" (.8 mm). Assemble with new roll pin only.

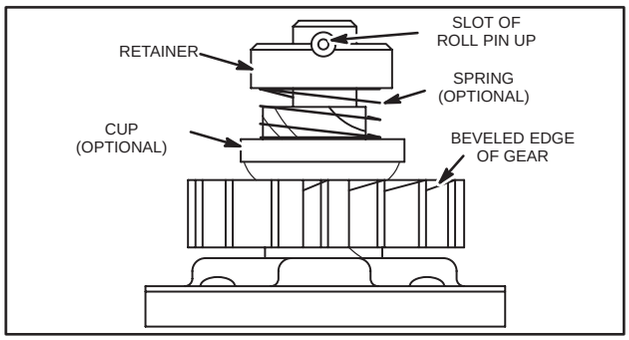

Fig. 694 – ASSEMBLING STARTER MOTOR DRIVE

4. If the original assembly is equipped with a spring cap assembly, assemble cap as follows:

ALTERNATORS, ELECTRIC, MECHANICAL & REWIND STARTERS, STARTER-GENERATORS, (cont'd)

5. To install plastic cap, use a socket approximately the same diameter as the plastic cap, for a driver as shown in Fig. 695.

6. Press cap in position. Cap should lock in position when properly assembled.

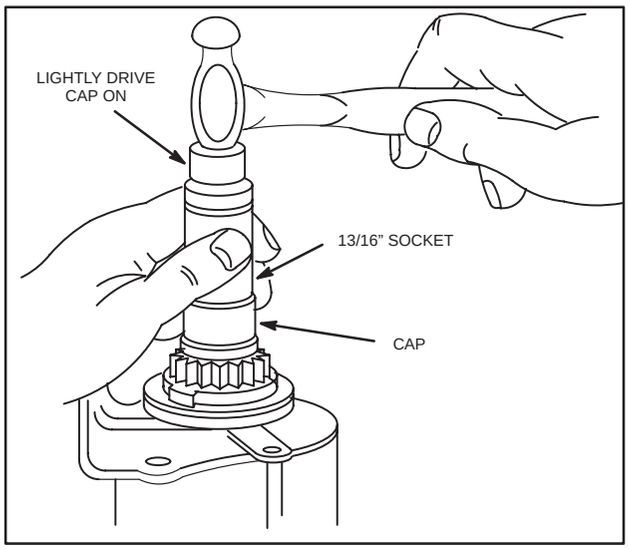

Fig. 695 – INSTALLING PLASTIC CAP

Test 12 Volt DC Starter Motor

A performance test of the 12 volt DC and 120 volt AC starter motors may be made in the following manner.

Equipment Needed

See page 15 for a starter mounting test bracket that can be made.

Digital Multimeter, Tool (#19357 or 19390) and Tool #19359, DC Shunt.

See Instruction Manual MS-6574 (Digital Multimeter).

A tachometer capable of reading 10,000 RPM.

A 12 volt battery fully charged.

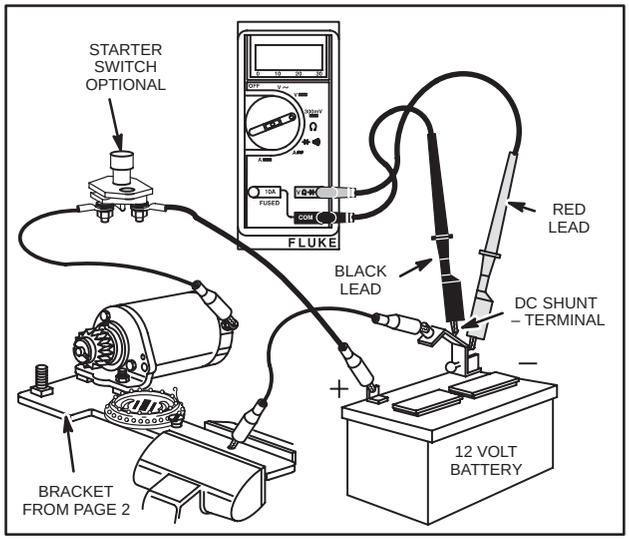

Fig. 696 – TESTING 12 VOLT STARTER MOTOR DIGITAL MULTIMETER

WARNING: Starter motor housing contains two powerful ceramic magnets that may crack if motor housing is clamped in a vise or struck with a hammer or hard object.

1. Connect the starter motor, battery and meter as shown in Fig. 696.

2. Note length of starter motor housing as shown in Fig. 688 and refer to Table No. 47 for specifications for motor being tested.

3. Activate the starter motor and note readings of meter and tachometer (RPM). A starter motor in good condition will be within specifications listed. If starter motor is not within specifications shown, see list on page 39 for possible causes.

Table No. 47
12 VOLT DC STARTER SPECIFICATIONS

Motor Housing Length	Minimum RPM	Maximum Amps
3–1/16" (78.0 MM)	6500	18 (Disregard surge current)
3–21/32" (93.0 MM)	6500	18 (Disregard surge current)
3–3/4" (95.0 MM)	6900	19 (Disregard surge current)
3–13/16" (97.0 MM)	6900	19 (Disregard surge current)
4–1/2" (111.0 MM)	6500	20 (Disregard surge current)
4–9/16" (115.9 MM)	6500	35 (Disregard surge current)

ALTERNATORS, ELECTRIC, MECHANICAL & REWIND STARTERS, STARTER-GENERATORS, (cont'd)

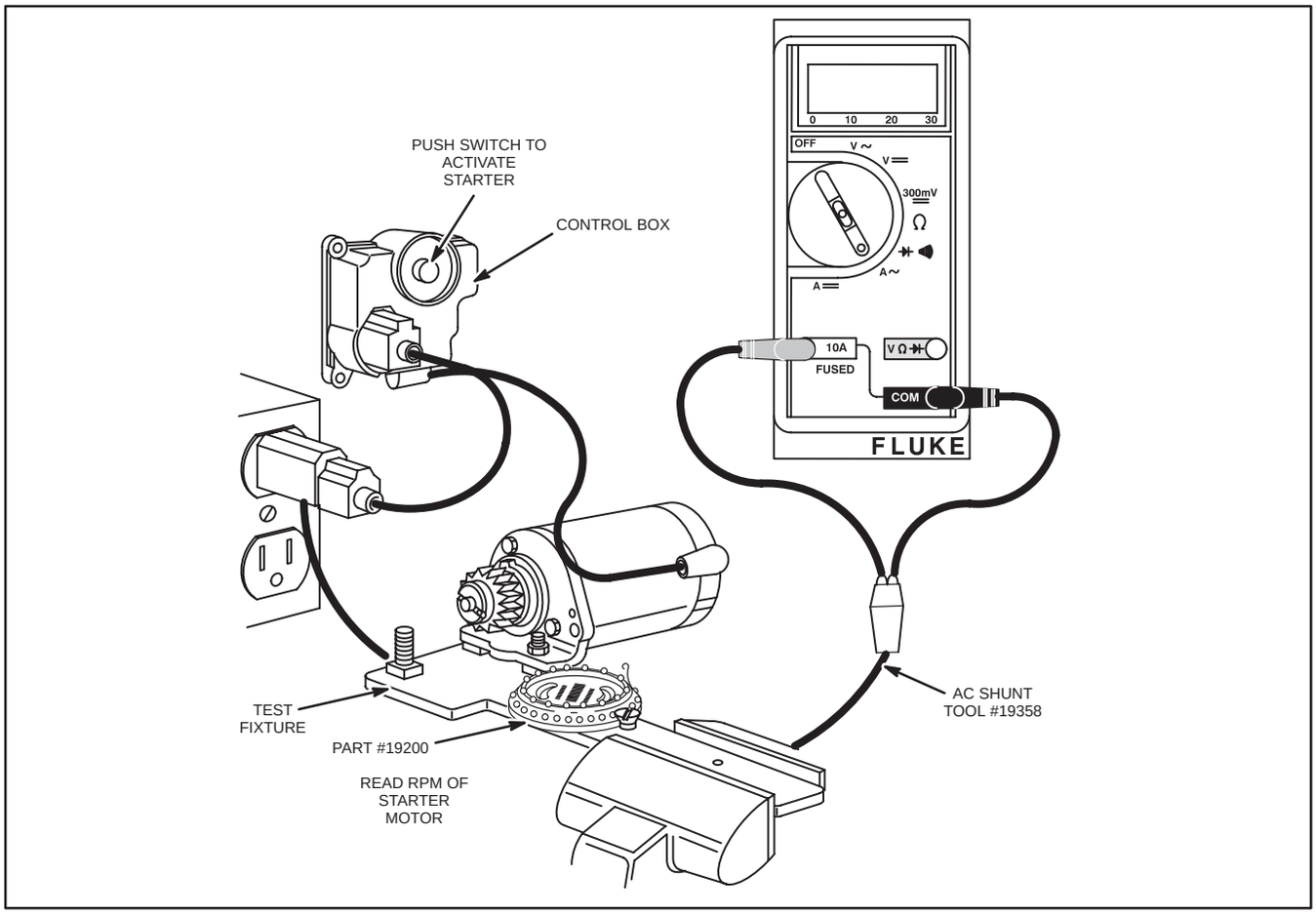

Fig. 697 – TESTING 120 VOLT AC STARTER – DIGITAL MULTIMETER

ALTERNATORS, ELECTRIC, MECHANICAL & REWIND STARTERS, STARTER-GENERATORS, (cont'd)

Test 120 Volt AC Starter Motor

See page 15 for a starter mounting test bracket that can be made.

Digital Multimeter, Tool (#19357 or #19390) with AC Shunt, Tool #19358.

A tachometer capable of reading 10,000 RPM.

WARNING: The following test procedure must be used to avoid any accidental shock hazard to the service technician.

1. Set meter to AC amps position.
2. Insert leads into meter and plug starter motor cord into AC shunt, Fig. 697.
3. Then connect AC shunt to a 120 volt outlet.
4. Refer to Table No. 48 and note the maximum allowable amperage draw.
5. Depress starter switch button. When meter reading stabilizes, (approximately 3 seconds) amperage should not exceed the specification shown in Table No. 48.
6. If starter motor amperage is within specification, check RPM with Tachometer Tool #19200.

WARNING: If amperage is higher than specification shown, immediately stop the test! An amperage reading higher than number in chart indicates a shorted starter motor, which could be dangerous.

Table No. 48
120 VOLT AC STARTER SPECIFICATIONS

Motor Housing Length	Minimum RPM	Maximum Amps
3-1/2" (89.0 MM)	6500	2.7 (Disregard surge current)

If either the 12 or the 120 volt starter motor does not perform satisfactorily, the following should be checked and corrected if necessary:

1. A binding or seizing condition in the starter motor bearings.
2. Starter motor brushes sticking in brush holders.
3. A dirty or worn armature commutator or brushes.
4. A shorted, open or grounded armature.
   A. Shorted armature (wire insulation worn and wires touching one another). Will be indicated by low or no RPM.
   B. Open armature (wire broken) will be indicated by low or no RPM.
   C. Grounded armature (wire insulation worn and wire touching armature lamination or shaft). Will be indicated by excessive current or no RPM.
5. A defective starter motor switch.
6. A defective starter motor control box rectifier assembly (120 volt AC only).
7. Weakened magnets.

Disassemble Starter Motor, Roll Pin Retainer Type

WARNING: DO NOT clamp motor housing in a vise or strike with a steel hammer. Starter motors contain two powerful ceramic magnets which can be broken or cracked if the motor housing is hit, deformed, dented or dropped.

1. Study Fig. 698 prior to starter motor disassembly.

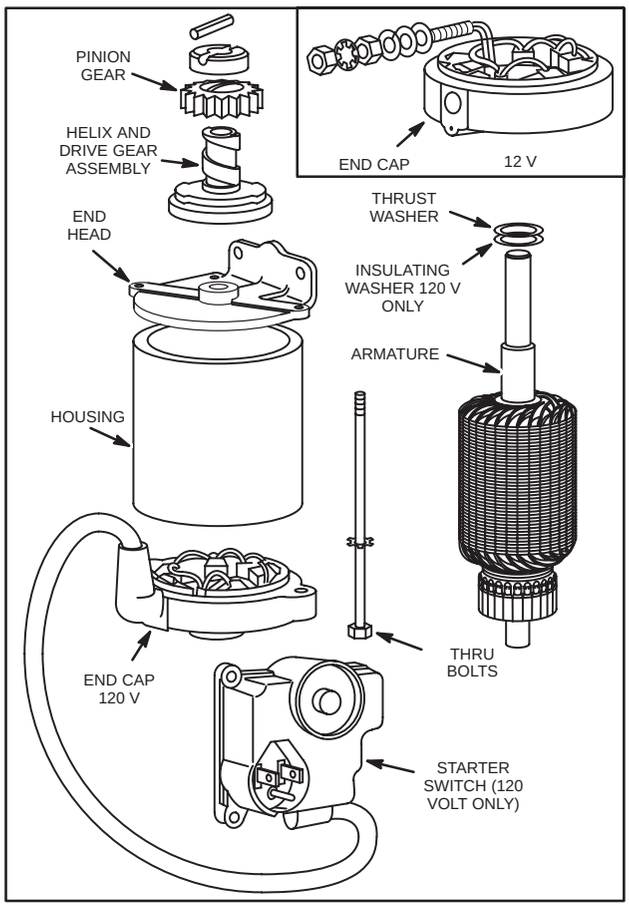

Fig. 698 – 12 VOLT & 120 VOLT STARTER MOTOR – EXPLODED VIEW

ALTERNATORS, ELECTRIC, MECHANICAL & REWIND STARTERS, STARTER-GENERATORS, (cont'd)

2. Mark drive end cap at seam on housing. Remove thru bolts.

3. The drive head end may now be removed. Inspect bushing for wear. If worn, replace drive head end assembly, Fig. 699.

NOTE: Match marks and thru bolts must be placed in the same position as when removed or interference may result.

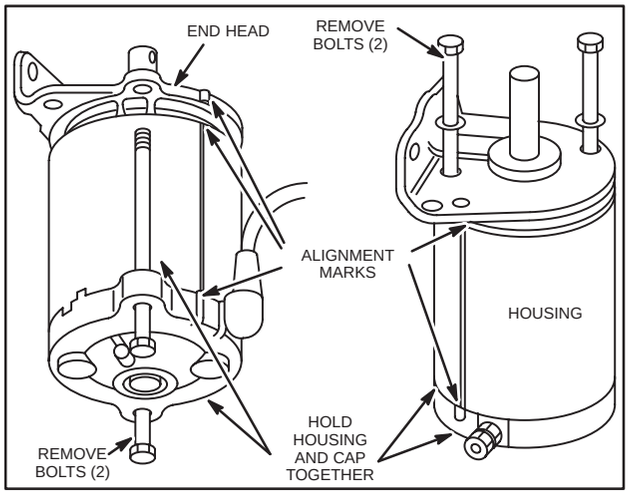

Fig. 699 – REMOVING THRU BOLTS

4. Hold the armature and commutator end cap against a work surface while sliding housing off the armature. This allows the armature to remain in the end cap for inspection of brush contact to armature, Fig. 700.

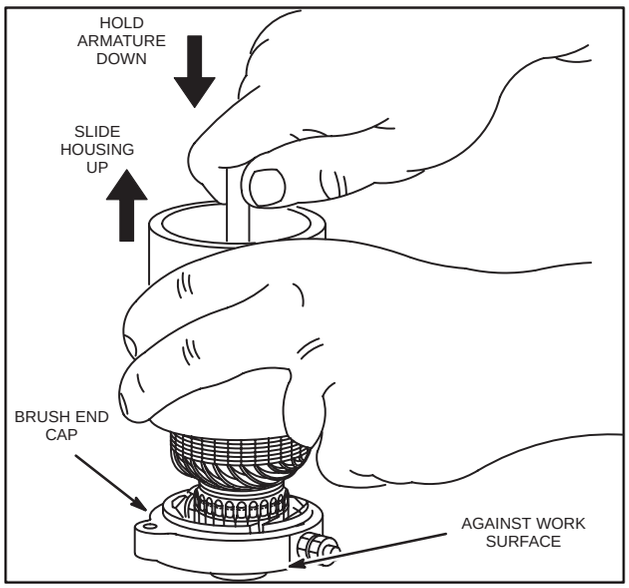

Fig. 700 – REMOVING MOTOR HOUSING

Remove Armature from Brush End Cap

1. Clean all dirt or corrosion from the armature, end cap, motor support, etc. The bearings, housing and armature should not be soaked in a cleaning solution. The armature commutator may be cleaned with a fine sand paper such as flint or commutator paper and an aerosol carburetor cleaner and compressed air.

NOTE: Do not use emery cloth, as emery will become embedded in the commutator causing rapid brush wear.

2. The commutator may also be machined with the use of a diamond cutting tool to no less than 1.230" (31.24 mm) – 12 volt, 1.320" (33.53 mm) – 120 volt, outside diameter.

3. Slots between commutator bars may be cleaned as shown in Fig. 105, or using an aerosol spray carburetor cleaner after sanding or machining.

4. If it is suspected that the armature field coil, magnets or motor housing is defective, a new part should be tried in the motor. If proper testing equipment is available, check the suspected armature or field coil to determine if it is defective (opens or grounds).

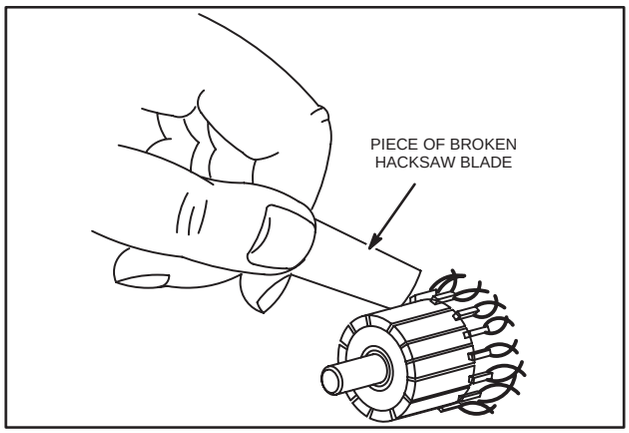

Fig. 701 – CLEANING COMMUTATOR

ALTERNATORS, ELECTRIC, MECHANICAL & REWIND STARTERS, STARTER-GENERATORS, (cont'd)

5. The brushes should be checked for poor seating, weak brush springs, dirt, oil or corrosion.

6. Brush spring pressure should be strong enough to ensure good brush contact with armature.

7. If brushes are worn to dimension shown in Fig. 702, replace.

8. Check to be sure brushes are not sticking in their holders.

9. Use holders to retain brushes and spring during assembly.

BRUSHES MUST MOVE FREELY IN HOLDERS!

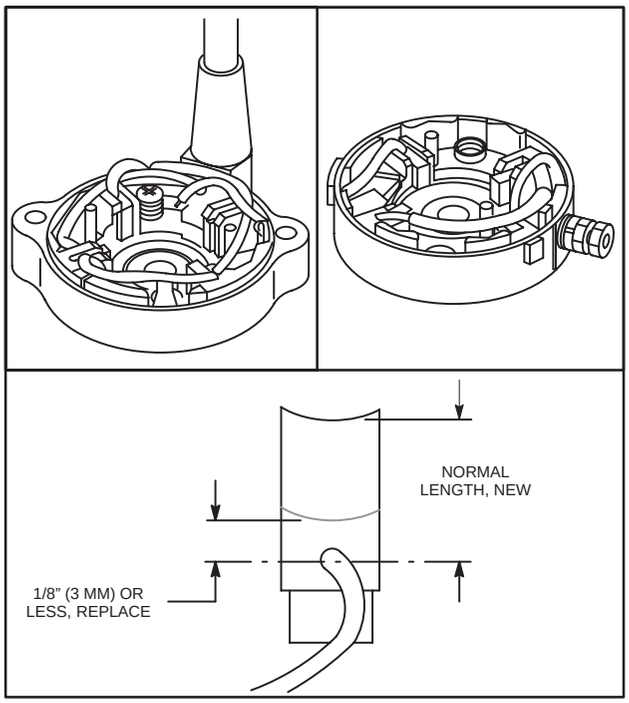

Fig. 702 – CHECKING BRUSHES

Testing Rectifier Control Assembly Briggs & Stratton 120 Volt Starter Motor

The AC control assembly housing contains a spring loaded starter button, cord assembly and rectifier. It is equipped with a three wire grounded receptacle. Fig. 703. The test procedure for checking the rectifier control assembly is as follows:

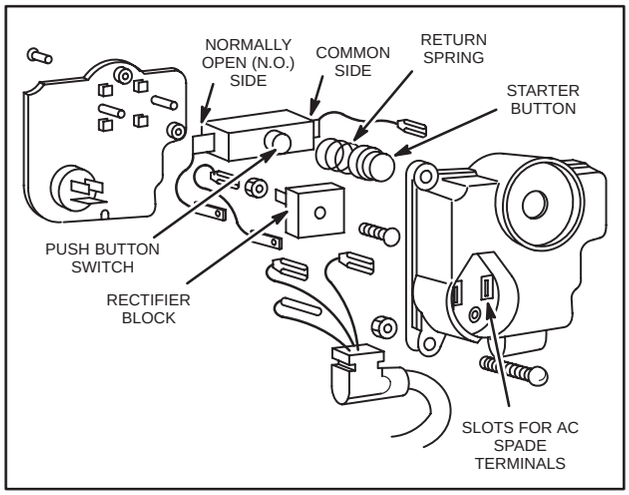

Fig. 703 – EXPLODED VIEW – CONTROL ASSEMBLY

Disassemble Control Assembly

WARNING: Disconnect extension cord from AC outlet and control assembly before disassembling.

1. With control assembly removed from mounting surface, remove three screws holding back plate to housing, Fig. 704.

2. Note position of wires, page 43.

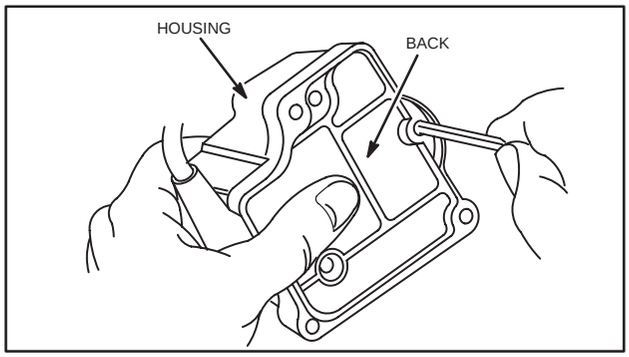

Fig. 704 – REMOVING BACK PLATE

ALTERNATORS, ELECTRIC, MECHANICAL & REWIND STARTERS, STARTER-GENERATORS, (cont'd)

Test Rectifier (Shorts or Opens)

1. Remove all wires from rectifier before checking.
2. Use Digital Multimeter, Tool (#19357 or #19390) or VOA Meter, Tool #19236.
3. Set meter to "Diode Test."
4. Using test leads, place RED test lead and BLACK test lead on rectifier terminals in sequence shown in Fig. 705, and Table No. 49.

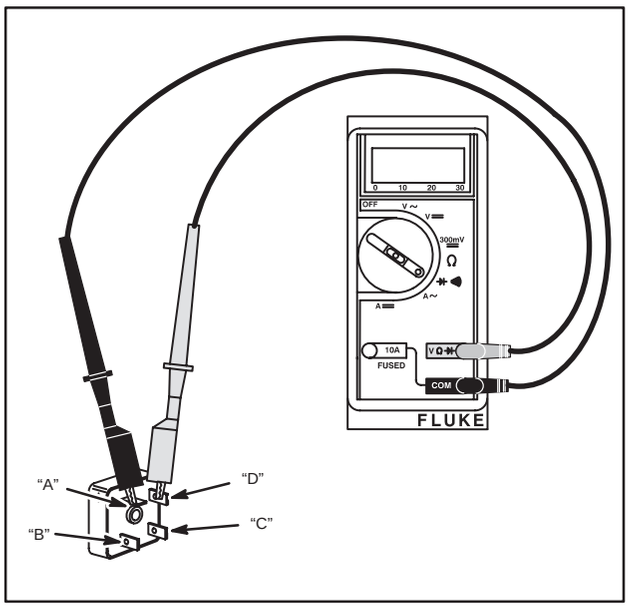

Fig. 705 – TESTING RECTIFIER

Table No. 49
DIGITAL MULTIMETER

Red Test Lead (+) Positive	Black Test Lead (–) Negative	"Beep" (Continuity)
A	B	NO
B	A	YES
B	C	NO
C	B	YES
C	D	YES
D	C	NO
D	A	YES
A	D	NO

5. If test results differ from those shown, the rectifier is defective and must be replaced.

Test Rectifier (Grounded)

1. Leave Digital Multimeter in Diode Test position.
2. With BLACK meter test lead contacting metal rectifier case, touch RED meter test lead to each rectifier terminal, Fig. 706.
3. Meter should display "OL" at each terminal. If meter makes a continuous tone when any terminal is contacted, the rectifier is grounded and must be replaced.
4. Set VOA meter to Ohms Position.
5. With one lead contacting metal rectifier case, touch other lead to each rectifier terminal, Fig. 706. There should be no continuity from any terminal to case.
6. Replace rectifier if grounded.

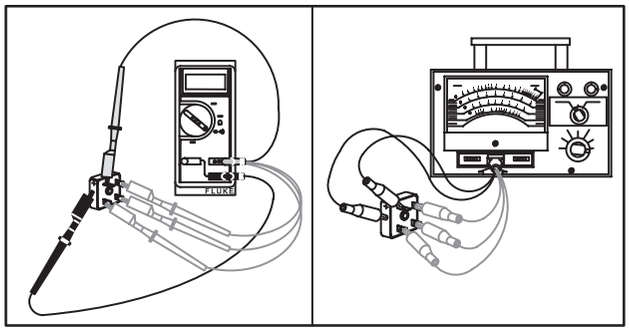

Fig. 706 – CHECKING FOR GROUNDS

7. To replace rectifier assembly, remove retainer spring washer.

NOTE: If rectifier post should break, drill a 3/16" (5.0 mm) diameter hole in post location.

8. Attach rectifier with plastic screw and nut. Assemble as shown in Fig. 707.

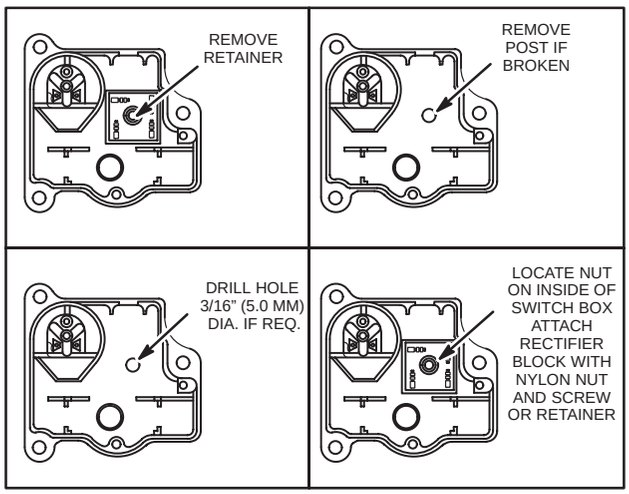

Fig. 707 – REPLACING RECTIFIER

ALTERNATORS, ELECTRIC, MECHANICAL & REWIND STARTERS, STARTER-GENERATORS, (cont'd)

Test Switch

1. Test switch assembly using the Digital Multimeter, with meter in the Diode Test position.

2. Attach meter test leads to switch terminals, Fig. 708.

3. Meter should display "OL," indicating no continuity.

4. When button is depressed, the meter should make a continuous tone, indicating continuity. Meter should indicate continuity only when button is depressed.

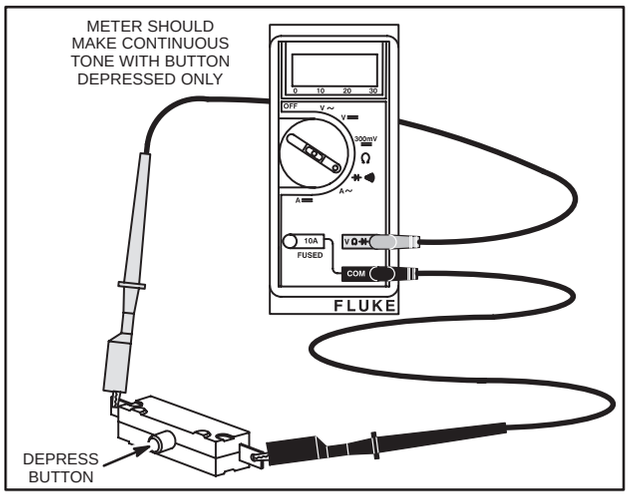

Fig. 708 – TESTING SWITCH ASSEMBLY

When re-assembling switch, position starter button and return spring as noted in Fig. 703.

With the starter motor and controller disassembled, the cord assembly may be tested for continuity using the Digital Multimeter or with the VOA meter.

Assemble 120 Volt Control Assembly

1. Connect wires as shown in Fig. 709.

WARNING: Incorrect assembly of black and white wires from cord to rectifier will cause motor to run backwards.

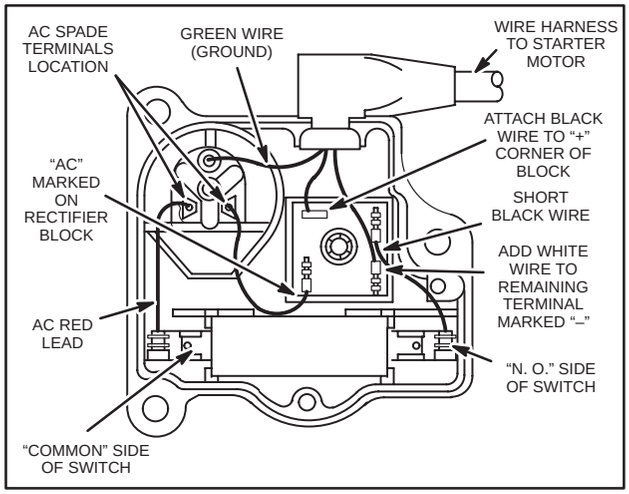

Fig. 709 – WIRING DIAGRAM

2. Re-assemble back plate to housing using three (3) screws.

Assemble Starter Motor

1. When all parts have been thoroughly inspected, lightly lubricate the bearings with #20 oil and reassemble in the following manner.

2. Assemble wiring in commutator end cap for 120 volt AC motor as shown in Fig. 710.

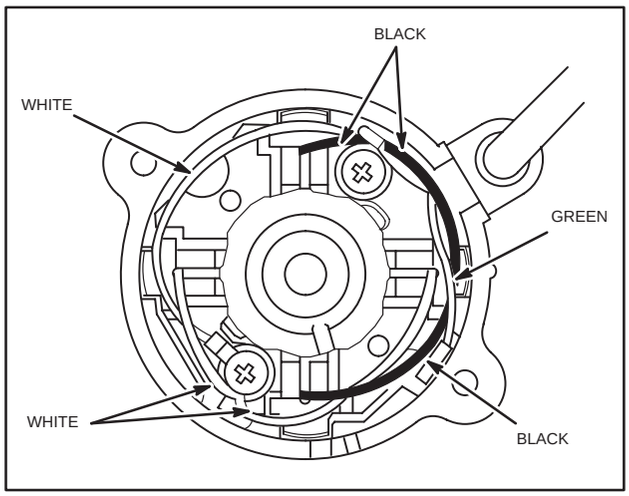

Fig. 710 – END CAP WIRING 120 VOLT AC

3. Insert brushes and springs in their respective holders, except 4–1/2" (111.0 mm) and 4–9/16" (115.9 mm) housing starters.

ALTERNATORS, ELECTRIC, MECHANICAL & REWIND STARTERS, STARTER-GENERATORS, (cont'd)

NOTE: A brush holding tool as shown in Fig's. 646 and 711 should be used to hold the brushes clear of the armature commutator during assembly.

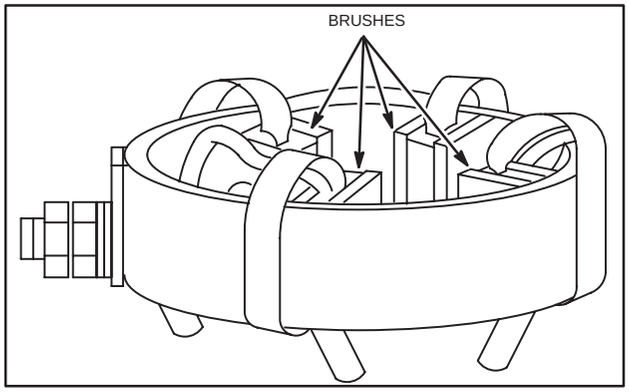

Fig. 711 – POSITIONING BRUSHES

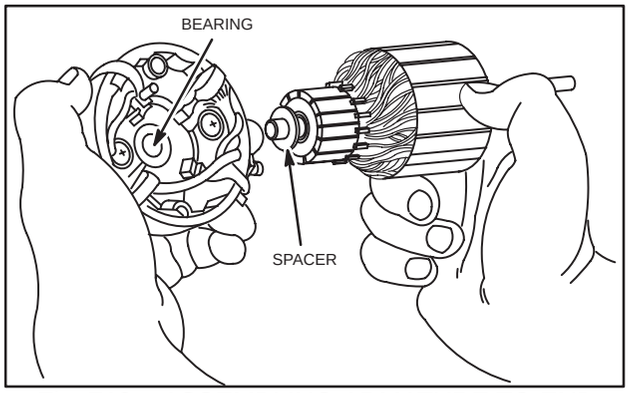

Fig. 712 – ASSEMBLING ARMATURE TO END CAP

Assemble Housing All Except 4–1/2" (111.0 mm), 4–9/16" (115.9 mm) Housings

1. Slide motor housing over armature with the notch toward commutator end cap.
2. Match alignment marks, Fig. 699.
3. Care should be used to prevent damage to magnets in motor housing during assembly.
4. Assemble spacers and drive head end bracket, again aligning match marks.
5. Assemble thru bolts and washers.
6. Torque thru bolts, 45 to 55 in. lbs. (5.1 to 6.3 Nm) for 1/4-20 thru bolts and 40 to 45 in. lbs. (4.5 to 5.1 Nm) for 10-24 thru bolts.
7. Armature end play is .006" (.18 mm) to .038" (1.22 mm) after assembly.

Install Brushes, 4–1/2" (111.0 mm) and 4–9/16" (115.9 mm) Housings

With a small blade screwdriver, bend brush spring out and insert brush in brush holder, Fig. 44.

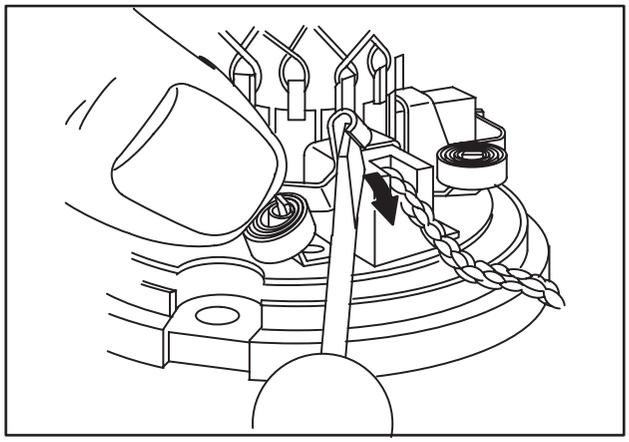

Fig. 713 – INSTALLING BRUSHES

Assemble Housing to Brush End Cap 4–1/2" (111.0 mm), 4–9/16" (115.0 mm) Housings

This design of starter housing has a large notch which indexes over the insulated terminal, Fig. 714.

1. While pushing down on armature and brush end cap. Slide starter housing down until large notch indexes with insulated terminal boss, Fig. 714. DO NOT damage magnets in starter housing.

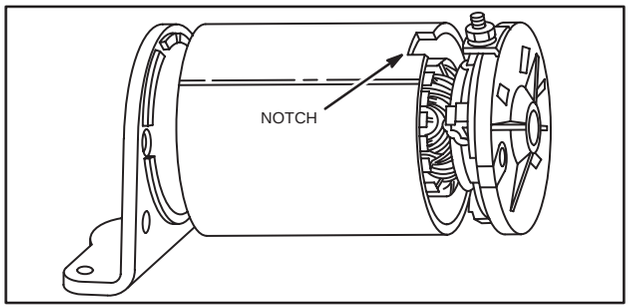

Fig. 714 – ASSEMBLING STARTER

2. Assemble thru bolts and washers.
3. Torque thru bolts, 45 to 55 in. lbs. (5.1 to 6.3 Nm) for 1/4-20 thru bolts and 40 to 45 in. lbs. (4.5 to 5.1 Nm) for 10-24 thru bolts.

WARNING: Before and after repairing the 120 volt AC starter motor, a Hi-Pot test must be made to prevent injury. If the proper test equipment is not available, take the starter motor to a qualified electric motor repair shop for testing.

After assembly of the starter motor drive and Hi-Pot test is passed, the starter motor is now ready for installation to the engine.

ALTERNATORS, ELECTRIC, MECHANICAL & REWIND STARTERS, STARTER-GENERATORS, (cont'd)

STARTER-GENERATORS

12 Volt Electric Starter – Generator Unit

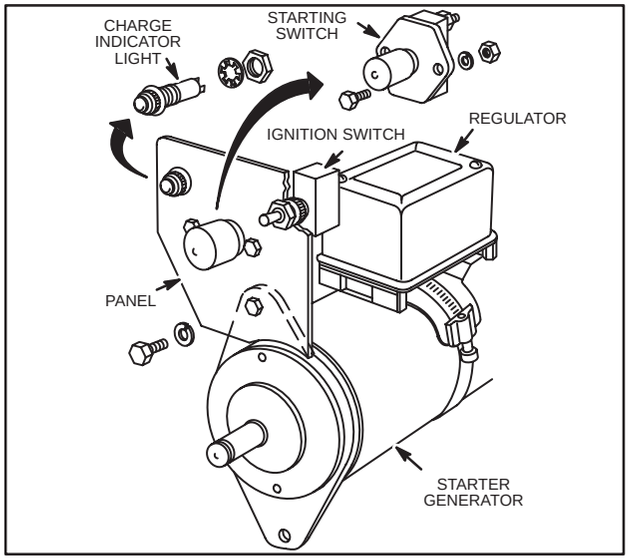

Fig. 715 – STARTER PANEL ASSEMBLY

Removing and Replacing Belts

Remove belt guard. Loosen starter-generator unit mounting bolts and push the unit toward the engine as far as it will go. The belt(s) can then be removed. Do not force belts onto pulleys. There is sufficient adjustment to allow them to be slipped in place. After belt has been installed, apply a 30 lb. force to the upper pulley and flange.

Tighten mounting bolts securely and replace belt guard.

NOTE: Starter-generator units on some models are equipped with two belts. On these units, both belts should be replaced even though only one belt appears to be worn. (Use only matched sets of belts.)

NOTE: Belts are of special high strength design, Fig's. 716 and 717. Use only genuine factory replacements available at an Authorized Briggs & Stratton Service Center.

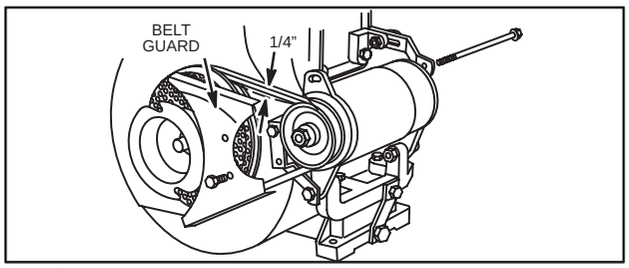

Fig. 716 – 12 VOLT STARTER – GENERATOR (LOW POSITION)

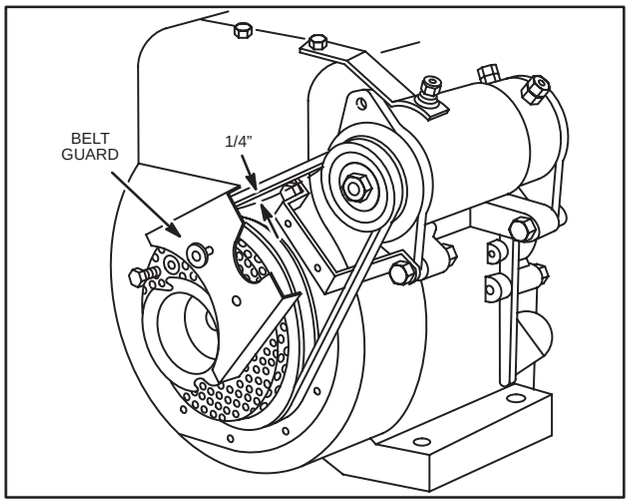

Fig. 717 – 12 VOLT STARTER – GENERATOR (HIGH POSITION)

Emergency Winter Operation

If run-down batteries are repeatedly experienced due to short or infrequent operation at low temperatures, it is advisable to temporarily increase the generator charge rate.

A simple method of increasing the charge rate is to disconnect the lead to the regulator BAT terminal and reconnect this lead to the regular (L) terminal. This bypasses the current-voltage feature of the regulator automatically increasing the amount of charge to the battery, Fig. 719.

WARNING: Operate the regulator in this manner only during cold weather when operating periods are short or infrequent. Re-establish the original lead connections as soon as mild weather returns or operating time becomes normal: otherwise the battery will be damaged by overcharging.

Battery Size

A 12 volt battery of 50 ampere hour capacity is recommended. See Fig. 718 for battery cable sizes.

WARNING: Battery must have negative (–) terminal grounded to engine or machine frame.

Warranty and Service

For warranty and service on all Delco-Remy parts, contact United Motors Service Agencies.

ALTERNATORS, ELECTRIC, MECHANICAL & REWIND STARTERS, STARTER-GENERATORS, (cont'd)

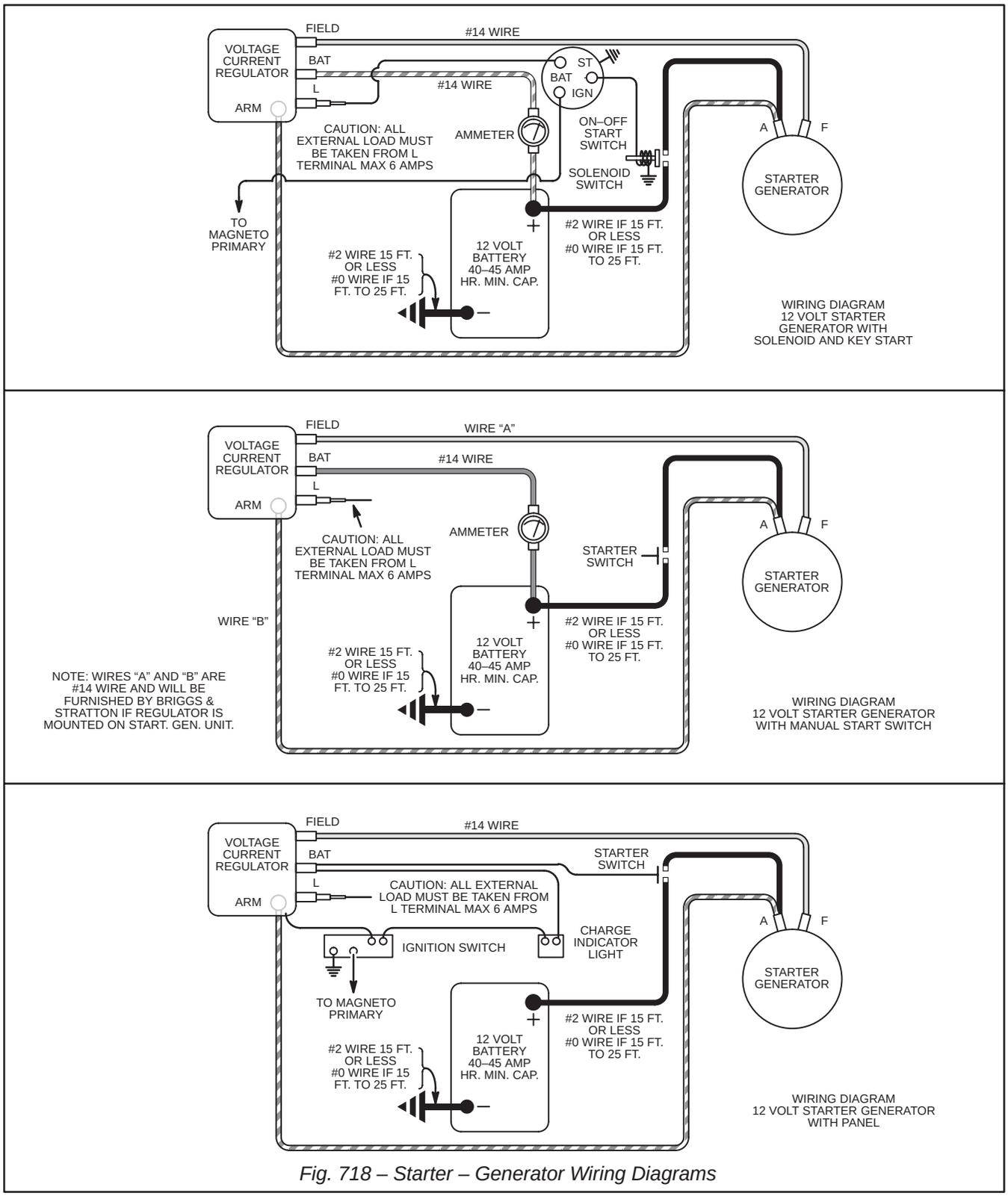

Fig. 718 – Starter – Generator Wiring Diagrams

Starter-Generator Wiring Diagram

The three drawings shown in Fig. 718 illustrate the most common methods of wiring 12 volt starter-generator units.

ALTERNATORS, ELECTRIC, MECHANICAL & REWIND STARTERS, STARTER-GENERATORS, (cont'd)

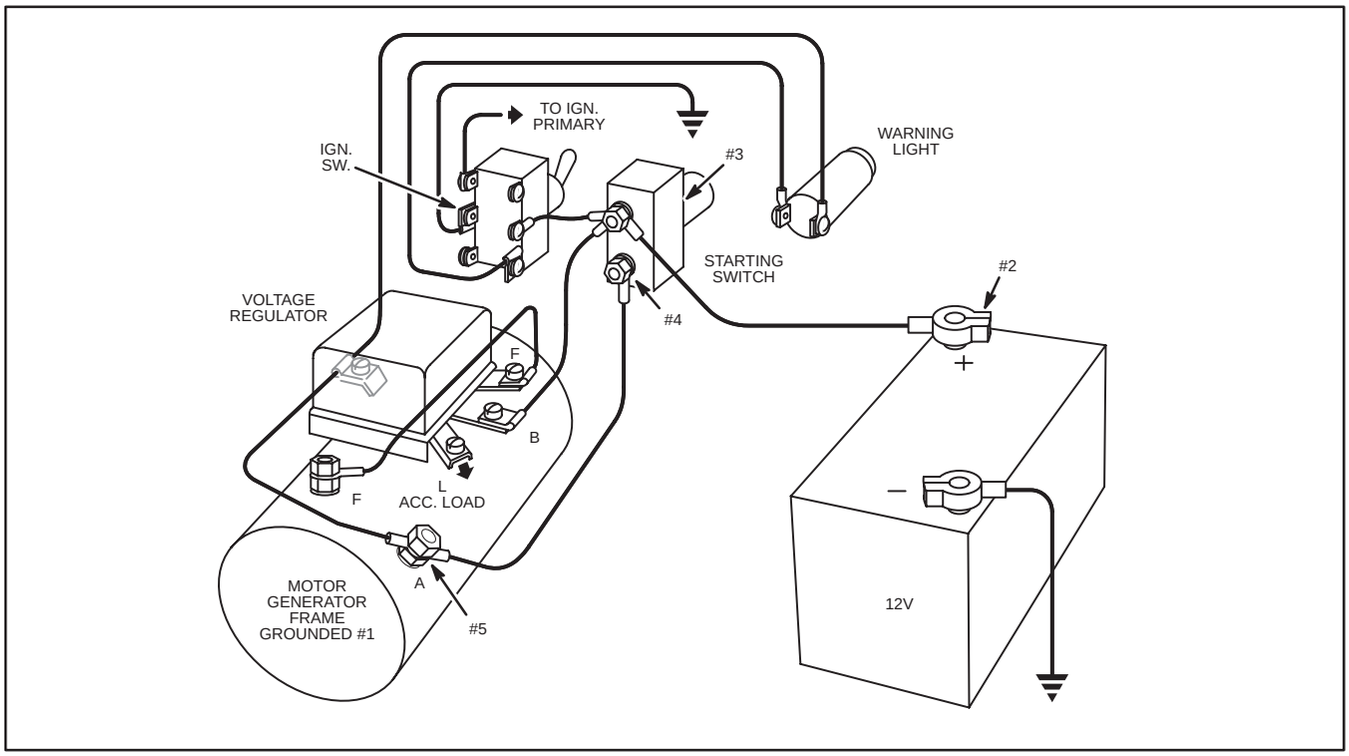

Fig. 719 – WIRING DIAGRAM

CHECKING STARTER-GENERATOR AND REGULATOR (See Fig. 719)

Use Digital Multimeter, Tool #19357 or VOA meter, Tool #19236. Set meter to read DC volts for tests 1-4. Set meter to read DC amps for test 5.

NOTE: All tests to be made with ignition off and starter switch pressed long enough for meter reading to stabilize.

1. Checking Ground Resistance (Poor Connection)

Attach BLACK meter test lead to #1 (ground). Leave attached through Step 4. Attach RED meter test lead to #2. Press starter switch. Meter should read 10 volts or more.

2. Checking Lead to Switch

Attach RED meter test lead to #3. A low or no voltage reading while pressing starter switch indicates defective positive battery cable or connection.

3. Checking Starter Switch

Attach RED meter test lead to #4. The meter should read "close to battery voltage" when starter switch is pressed. Very low or no voltage indicates a defective starter switch.

4. Checking Lead from Switch to Starter

Attach RED meter test lead to #5. Press the starter switch. The meter should display "close to battery voltage." If the starter motor does not crank and battery voltage is displayed, the starter motor is defective. If voltage is not displayed, cable or connection between test-point #5 and #4 is defective.

5. Generator-Regulator Test

Set meter to read DC amps. Disconnect wire at voltage regulator terminal "B". Attach RED meter test lead to terminal "B" and BLACK meter test lead to positive (+) battery terminal. The meter will register charge, if any, to the battery when the engine is running. Charging will start approximately 1800 to 2000 RPM, and will vary according to the battery state of charge.

ALTERNATORS, ELECTRIC, MECHANICAL & REWIND STARTERS, STARTER-GENERATORS, (cont'd)

If meter reads 10 amps or more, disconnect "F" terminal at regulator. If output remains high, the generator is defective. If output stops, the regulator is defective.

If no charge is shown on meter, short the regulator "F" terminal to ground. Meter should then show a 10 amp or more charge. No charge would indicate a defective generator. A charge would indicate a defective regulator.

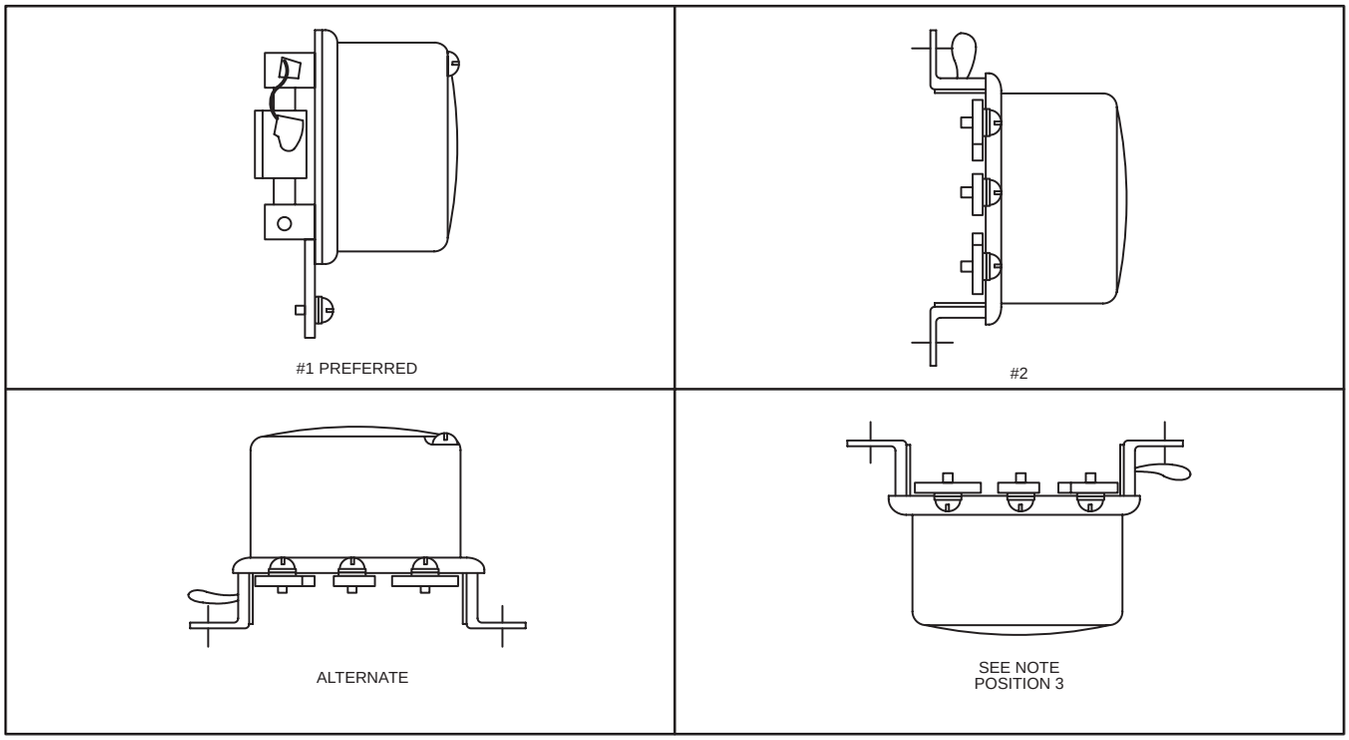

Fig. 720 – VOLTAGE REGULATOR MOUNTING POSITIONS

Installation of Voltage Regulators

NOTE: Regulator will not function when installed in this position.

Regulator should be mounted at a point of minimum vibration.

There must be a good ground connection between regulator mounting feet and equipment frame and between the engine and equipment frame. If this is not possible, a #14 wire must be run from the grounded regulator mounting foot to the engine.

12 Volt Starter-Generator Belt Adjustment Procedure

To adjust, tilt away from blower housing until belts move up and down 1/4" with thumb pressure at a point midway between pulleys. Tighten screws to hold in place and install guard and tighten in place, Fig's. 716 and 717.

WARNING: DO NOT EXCEED CHARGE RATE OF 1/10 AMPERE FOR EVERY AMPERE OF BATTERY RATING. Consult battery manufacturer for maximum charge recommendations.

1. Use a taper charger (automatically reduces charge rate).

2. Fill battery cells with distilled water or tap water after charging (for batteries that have been in service).

NOTE: If battery gets "Hot" to the touch or is spitting acid (gassing) excessively, unplug charger periodically.

3. With battery fully charged, check specific gravity readings of each cell with a Battery Hydrometer and record readings, Fig. 723. All readings should be above 1.250 (compensating for temperature). If specific gravity readings varied .050 or if ALL cells read less than 1.225, replace battery.

ALTERNATORS, ELECTRIC, MECHANICAL & REWIND STARTERS, STARTER-GENERATORS, (cont'd)

Installation:

1. Before installing battery, connect all equipment to be operated.

2. Place battery in holder with a flat base. Tighten hold downs evenly until snug. DO NOT over-tighten.

3. Connect positive terminal to positive post FIRST to prevent sparks from accidental grounding. Tighten connectors securely.

4. Connect negative terminal to negative battery terminal. Tighten connectors securely.

Use Digital Multimeter, Tool #19357 or VOA meter, Tool #19326.

Attach RED meter test clip to positive (+) battery terminal. Attach BLACK meter test lead to negative (–) battery terminal. With ignition switch "OFF," press starter button. If ignition switch and starter switch are the same switch, disconnect wire from spark plug and ground ignition using Ignition Tester, Tool #19051. Turn switch to "START." Meter should display 9 volts or more while cranking engine. If less than 9 volts, replace battery.

Battery Information

The battery used to operate starter motors on most Briggs & Stratton engines above 4 horsepower, is of the 12 volt, lead acid – wet cell type. This type is available as a wet charge or dry charge battery.

The wet charged maintenance-free battery is filled with electrolyte at the time of manufacture. The level of electrolyte cannot be checked.

The dry charge battery is manufactured with fully charged plates. Electrolyte must be added at the time that the battery is placed in service. Before activating a dry charge battery, read and follow the manufacturer's recommended procedure, Fig. 721.

WARNING: BATTERY GAS IS EXPLOSIVE. DO NOT store, charge or use a battery near an open flame or devices which utilize a pilot light or can create a spark.

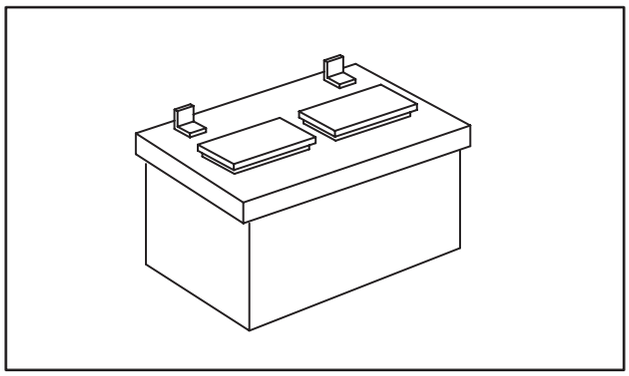

Fig. 721 – TYPICAL DRY CHARGE BATTERY

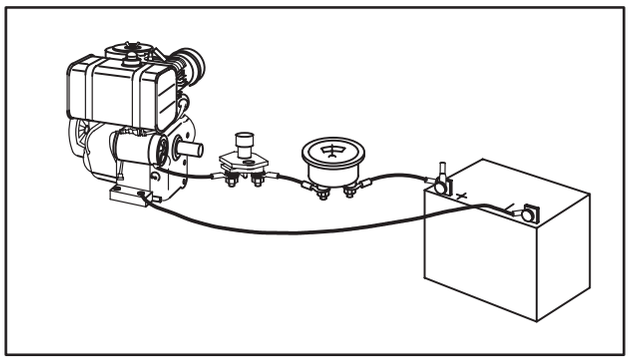

Fig. 722 – TYPICAL 12V WIRING DIAGRAM

Checking Battery

1. Physical check – clean if necessary

   A. Corrosion

   B. Dirt

   C. Terminal and clamps (secure – good conditions)

2. Bring battery to full charge.

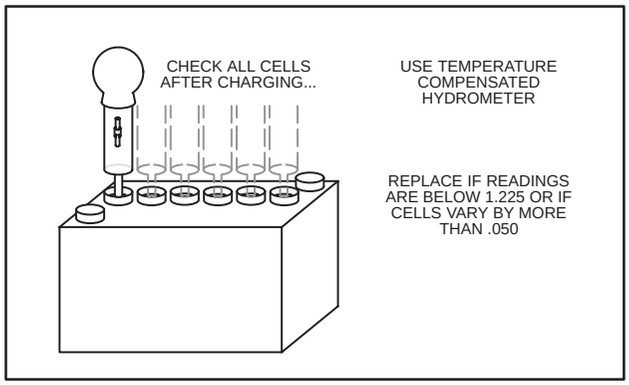

Fig. 723 – CHECKING 12V BATTERY CELLS (LEAD ACID – WET CELL – DRY CHARGE)

ALTERNATORS, ELECTRIC, MECHANICAL & REWIND STARTERS, STARTER-GENERATORS, (cont'd)

ALTERNATORS (using 19326 VOA Meter)

The alternator systems used on Briggs & Stratton single cylinder engines can be identified by the color of the output wire and connector. Table No. 50 lists the various alternator systems and engine models where they are used. Figures can be used to identify type of alternator. Page number is for test procedures.

Table No. 50

Basic Model Series	130000	140000	170000	190000	220000	240000	250000	300000 320000
1-1/2 Amp	Fig. 724 p. 55							
4 Amp		Fig. 725 p. 58						
7 Amp		Fig. 726 p. 59						
DC Only		Fig. 727 p. 62	Fig. 727 p. 62	Fig. 727 p. 62	Fig. 727 p. 62	Fig. 727 p. 62	Fig. 727 p. 62	Fig. 727 p. 62
AC Only				Fig. 728 p. 63	Fig. 728 p. 63	Fig. 728 p. 63	Fig. 728 p. 63	Fig. 728 p. 63
Dual Circuit (Early)		Fig. 729, p. 63	Fig. 729 p. 63	Fig. 729 p. 63	Fig. 729 p. 63	Fig. 729 p. 63	Fig. 729 p. 63	Fig. 729 p. 63
Dual Circuit (Current)		Fig. 730 p. 65	Fig. 730 p. 65	Fig. 730 p. 65	Fig. 730 p. 65	Fig. 730 p. 65	Fig. 730 p. 65	Fig. 730 p. 65
Tri-Circuit				Fig. 731 p. 65	Fig. 731 p. 65	Fig. 731 p. 65	Fig. 731 p. 65	Fig. 731 p. 65
Quad Circuit							Fig. 732 p. 67	
5 & 9 Amp Regulated				Fig. 733 p. 69			Fig. 733 p. 69	Fig. 733 p. 69
10 Amp Regulated								Fig. 734 p. 70
10 & 16 Amp Regulated				Fig. 735 p. 71	Fig. 735 p. 71	Fig. 735 p. 71	Fig. 735 p. 71	Fig. 735 p. 71

ALTERNATORS, ELECTRIC, MECHANICAL & REWIND STARTERS, STARTER-GENERATORS, (cont'd)

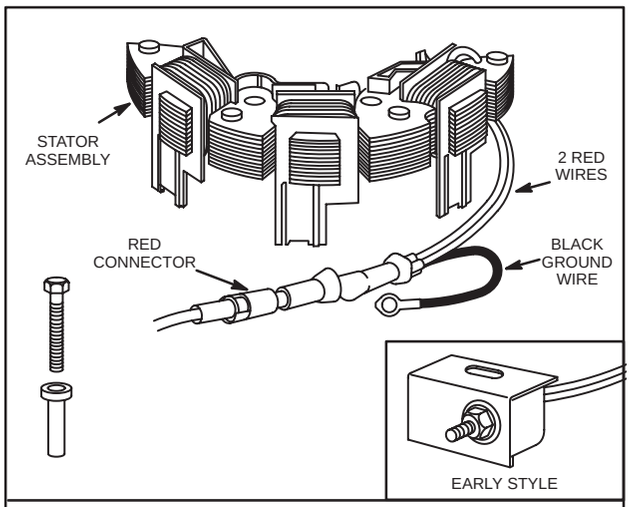

- 1-1/2 amps DC+ charging for battery
- Two RED leads from stator
- RED connector output lead

Fig. 724 – 1-1/2 AMP

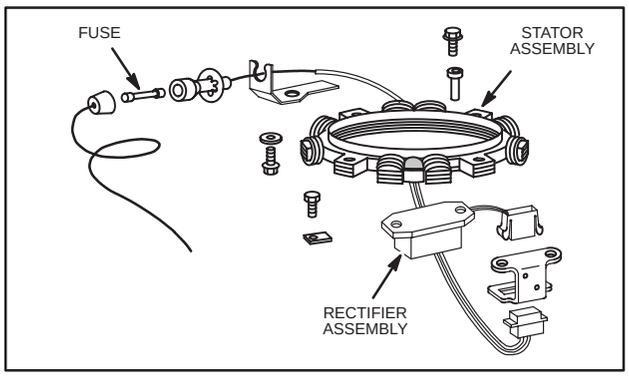

Fig. 725 – 4 AMP

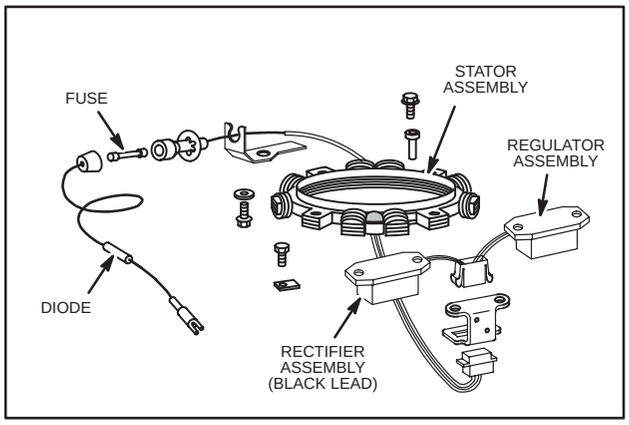

Fig. 726 – 7 AMP

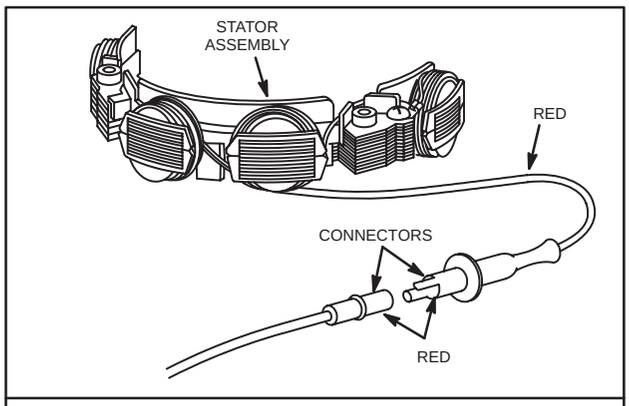

- 3 amps DC+ for charging battery
- One RED lead from stator
- Diode encased at connector
- RED connector output lead

Fig. 727 – DC ONLY

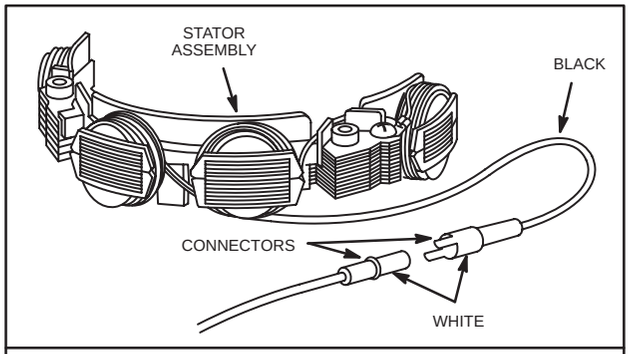

- 14 volts AC for lighting circuit
- One BLACK lead from stator
- WHITE connector output lead

Fig. 728 – AC ONLY

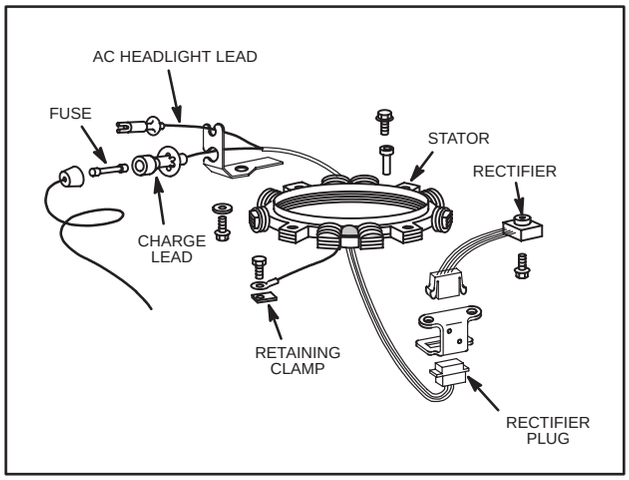

Fig. 729 – DUAL CIRCUIT – FUSED (EARLY STYLE)

ALTERNATORS, ELECTRIC, MECHANICAL & REWIND STARTERS, STARTER-GENERATORS, (cont'd)

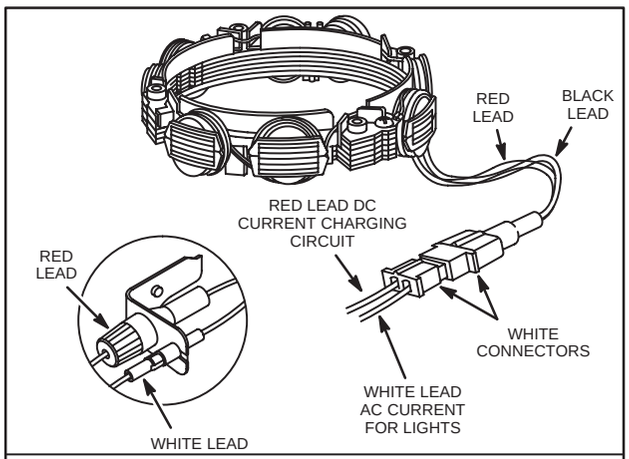

- 3 amps DC+ for charging battery (RED lead)
- 14 volts AC for lighting circuit (BLACK lead)
- Diode encased at connector
- WHITE connector with two pin terminals

Fig. 730 – DUAL CIRCUIT (CURRENT STYLE)

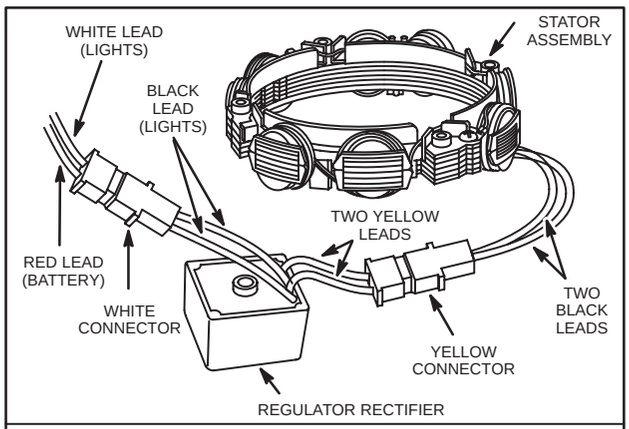

- 5 amps DC+ regulated for charging battery (Red lead)
- 5 amps DC– unregulated for lights (White lead)
- Two BLACK leads from stator into yellow connector
- WHITE lead to lights
- RED lead to battery

Fig. 732 – QUAD CIRCUIT

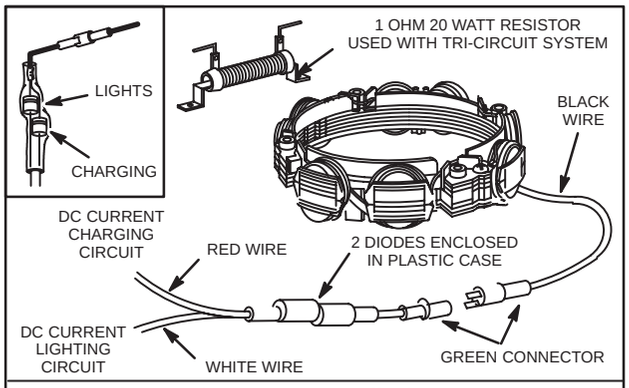

- 28 volts AC from stator to diodes
- One BLACK lead from stator
- GREEN connector
- WHITE lead for lights
- RED lead connector to battery and clutch

Fig. 731 – TRI-CIRCUIT

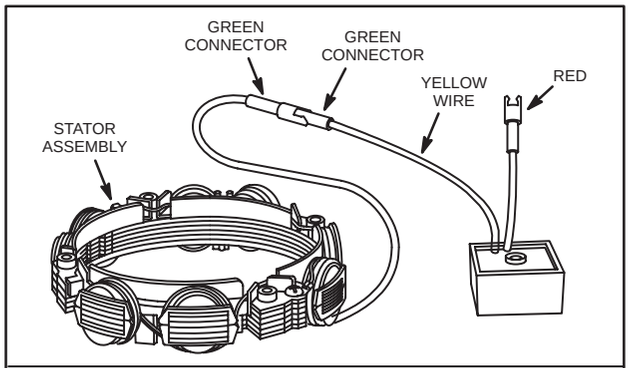

- 5 or 9 amps DC+ regulated for charging battery
- One BLACK lead from stator
- GREEN connector from stator
- YELLOW lead to regulator-rectifier
- One RED lead from regulator-rectifier with RED connector

Fig. 733 – 5 OR 9 AMP REGULATED

ALTERNATORS, ELECTRIC, MECHANICAL & REWIND STARTERS, STARTER-GENERATORS, (cont'd)

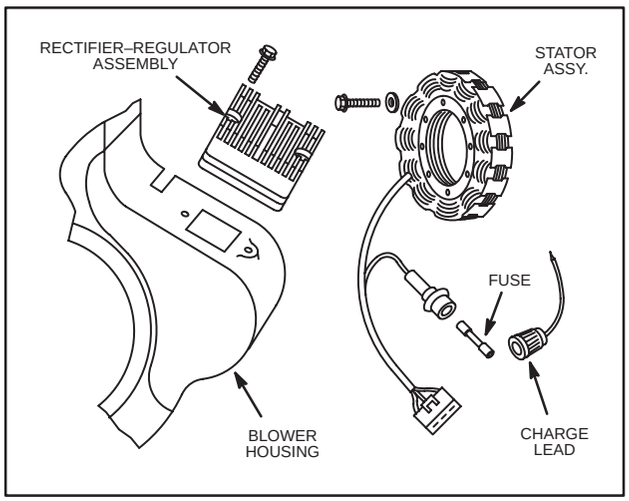

Fig. 734 – ALTERNATOR ASSEMBLY

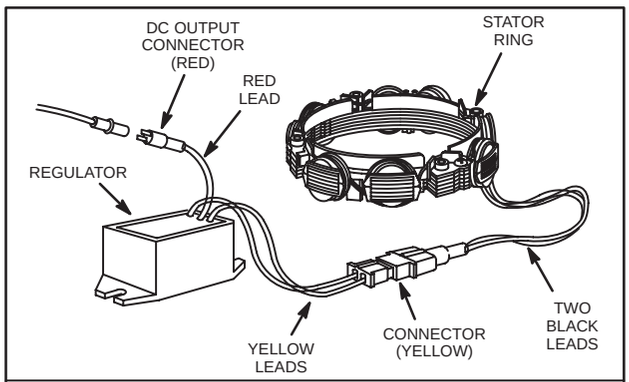

- 10 or 16 amps DC+ regulated for charging battery
- Two BLACK leads from stator
- YELLOW connector with two pin terminals
- Two YELLOW leads to regulator-rectifier
- One RED lead from regulator-rectifier to RED connector output lead
- 10 and 16 amp systems use the same stator, color coding and regulator-rectifier
- Alternator output is determined by flywheel alternator magnet size

Fig. 735 – 10 OR 16 AMP REGULATED

ALTERNATORS, ELECTRIC, MECHANICAL & REWIND STARTERS, STARTER-GENERATORS, (cont'd)

COMPLAINT	POSSIBLE CAUSES
"Battery not charging"	Engine RPM too low Defective battery Loose belt Loose or corroded battery ground leads Loose or corroded battery charge leads Open, shorted, or grounded wires between output connector and battery Defective diode (open or shorted) Defective or improperly grounded regulator-rectifier Diode installed incorrectly (reversed) Damaged battery (shorted battery cells) Excessive current draw from accessories Low magnetic flux or damaged alternator magnets
"Battery in state of overcharge"	Severe battery vibration (missing or broken tie down straps) Battery rate of charge not matched to alternator output. Damaged battery (shorted battery cells) Defective regulator One ohm resistor shorted or grounded (Tri-Circuit only)
"Headlights not working"	Inline fuse "blown" (if so equipped) Defective headlights Loose or corroded wires Open, shorted, or grounded wires between output connector and headlights Light switch defective Defective diode (Tri-Circuit, open or shorted, white output lead side) Low magnetic flux or damaged alternator magnets
"Electric clutch not working" (Tri-Circuit)	Engine RPM too low Inline fuse "blown" (if so equipped) Loose or corroded wires Open, shorted or grounded wires between output connector and electric clutch Defective diode (open or shorted, red output lead side) NOTE: Battery will also not charge. Defective electric clutch switch Open, shorted, or grounded clutch circuit Low magnetic flux or damaged alternator magnets

Equipment To Test Alternators

The following list of equipment is recommended for testing alternators.

Volt/Ohm/Ampere (VOA) Meter

The VOA meter is available from your Briggs & Stratton source of supply. Order as Tool #19236. The meter may be used to read volts, ohms or amperes when leads are attached to appropriate connector, Fig. 736.

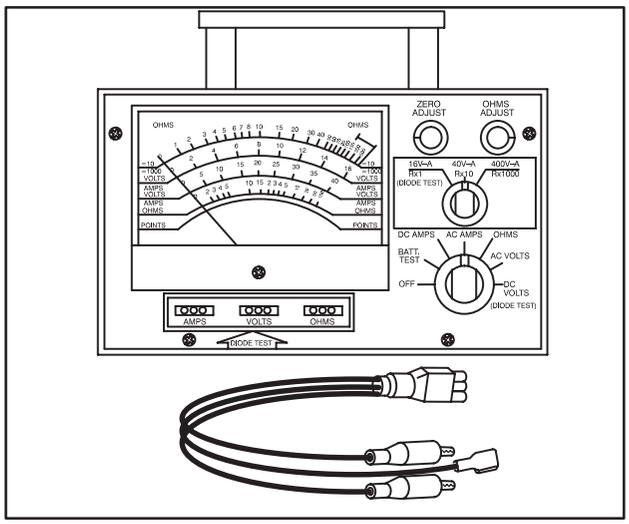

Fig. 736 – VOA METER

ALTERNATORS, ELECTRIC, MECHANICAL & REWIND STARTERS, STARTER-GENERATORS, (cont'd)

Fuse Cap Test Lead

Use on fused type alternator systems. Make from Part #390888, fuse cap. Attach alligator clip as shown in Fig. 737.

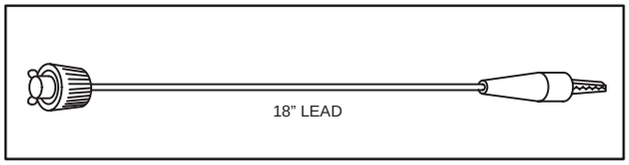

Fig. 737 – FUSE CAP TEST LEAD

Fuses

AGC or 3AG, 7-1/2 and 15 amp fuses, available from automotive parts supplier or Briggs & Stratton Part #67125 (7-1/2 amp) and Part #67345 (15 amp).

NOTE: Before testing alternator output (volts, amps), first use an accurate tachometer and temporarily adjust engine speed to the RPM specified in the test instructions.

WARNING: Upon completion of the alternator output test, always readjust the engine RPM to its correct Top No Load Governed Speed as found in the Service Engine Sales Manual Microfiche MS-6225 or the Service Sales Manual, MS-4052.

When checking alternators, make the tests in the following sequence.

1. Test alternator output.
2. Test diode(s) or regulator-rectifier (if equipped).

1-1/2 AMP ALTERNATOR USED ON MODEL SERIES 130000

The integral 1-1/2 amp alternator, with solid state rectifier, is designed for use with a compact battery. A 12 ampere hour battery is suggested for warm temperature operation and a 24 ampere hour battery should be used in cold service.

The alternator is rated at 3600 RPM. Output is reduced at lower engine RPM.

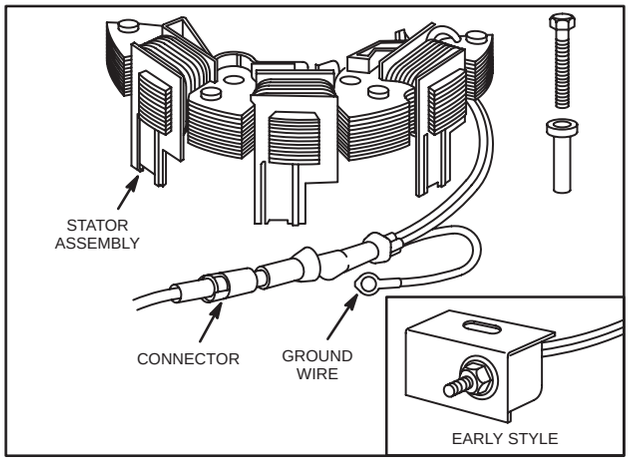

Fig. 738 – ALTERNATOR ASSEMBLY

Check 1-1/2 Amp Alternator

Check battery polarity. Negative (-) side of battery should be grounded to engine or frame; positive (+) side of battery to starter motor and alternator charge lead, Fig. 739. If reversed, rectifier and/or, battery will be damaged.

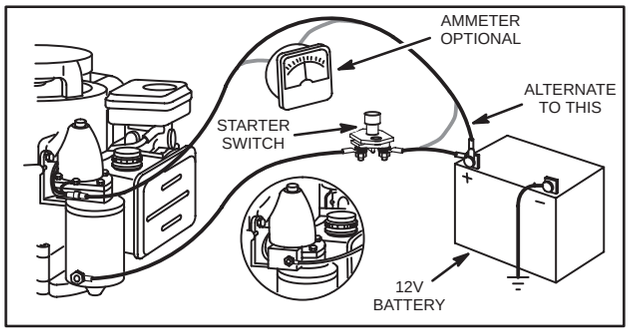

Fig. 739 – TYPICAL WIRING INSTALLATION

Test DC Amp Output

Disconnect charging lead at positive (+) battery terminal. Then disconnect charging lead at output terminal.

1. Insert RED test lead into 10A receptacle in meter.
2. Insert BLACK test lead into COM receptacle in meter.
3. Rotate selector to **A** ⎓ (DC amps) position.
4. Attach RED test lead clip to DC output terminal, Fig. 740.
5. Attach BLACK test lead clip to positive (+) battery terminal.

ALTERNATORS, ELECTRIC, MECHANICAL & REWIND STARTERS, STARTER-GENERATORS, (cont'd)

6. With engine running at 3600 RPM, DC output should be no less than 1.2 amps DC.

7. If low output or no output is found, test rectifier.

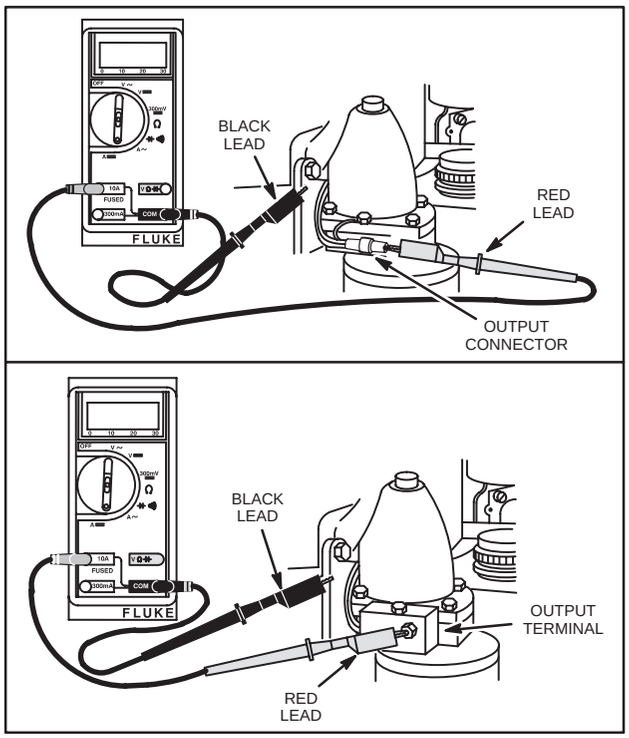

Fig. 740 – CHECKING ALTERNATOR OUTPUT

Test Rectifier (Diode Test)

In the Diode Test position, the meter will display the forward voltage drop across the diode(s) in the rectifier. If the voltage drop is less than 0.7 volts, the meter will "Beep" once as well as display the voltage drop. A continuous tone indicates continuity (shorted diode). An incomplete circuit (open diode) will be displayed as "OL."

1. Insert RED test lead into **V** Ω ⊣⊢ receptacle in meter.

2. Insert BLACK test lead into COM receptacle in meter.

3. Rotate selector to ⊣⊢))) (Diode Test) position.

4. Attach BLACK test lead clip to output terminal. Leave BLACK test lead attached through Step 6, below.

5. Pierce one output wire with a pin and touch RED test lead probe to pin as shown in Fig. 741.

   A. Meter should "Beep."

   B. If meter makes a continuous tone or displays "OL" rectifier is defective. Replace.

6. Repeat test with other output wire.

   A. Meter should "Beep."

   B. If meter makes a continuous tone or displays "OL" rectifier is defective. Replace.

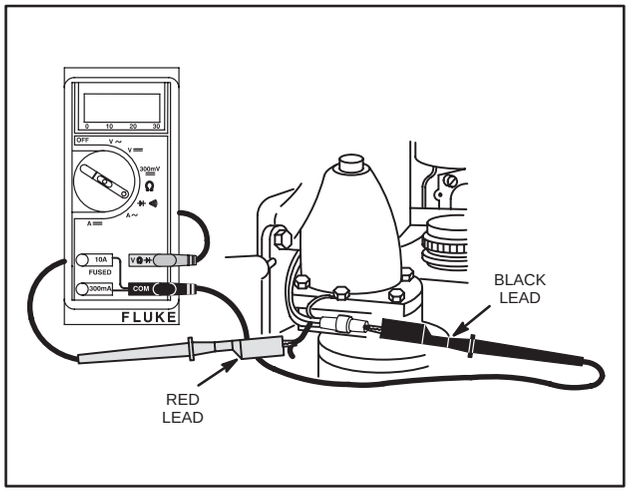

Fig. 741 – TESTING RECTIFIER

7. Attach RED test lead clip to a clean unpainted area on engine (good ground). Leave RED test lead clip attached for remainder of test.

8. Pierce one stator output wire with a pin and touch BLACK test lead probe to pin as shown in Fig. 742.

   A. Meter should "Beep."

   B. If meter makes a continuous tone or displays "OL" rectifier is defective. Replace.

9. Repeat test with other stator output wire.

   A. Meter should "Beep."

   B. If meter makes a continuous tone or displays "OL" rectifier is defective. Replace.

10. If rectifier tests OK, replace stator. If rectifier is defective, replace rectifier. Then re-test DC output.

ALTERNATORS, ELECTRIC, MECHANICAL & REWIND STARTERS, STARTER-GENERATORS, (cont'd)

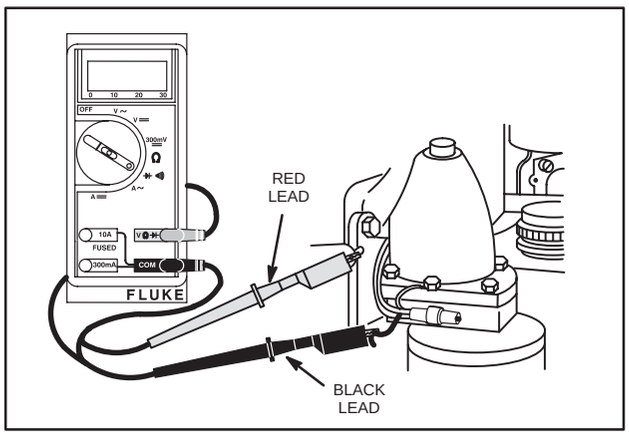

Fig. 742 – TESTING RECTIFIER

Replace Defective Stator

1. Remove the blower housing, rotating screen, rewind clutch and flywheel.

Note location of stator wires: under one coil spool and between starter and starter drive housing as shown in Fig. 743.

2. Remove ground wire or rectifier assembly (early style) from starter drive housing.

3. Remove the two stator mounting screws and bushings.

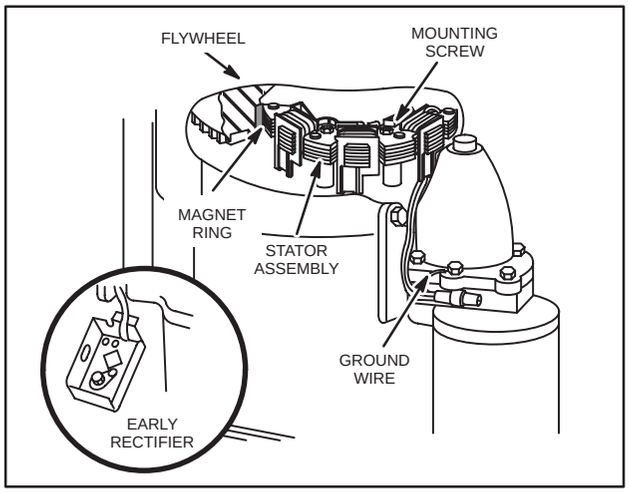

Fig. 743 – STATOR ASSEMBLY LOCATION

4. Install new stator assembly with stator mounting screws and bushings. Be sure leads are properly positioned as shown in Fig. 744.

5. While tightening mounting screws, push stator toward crankshaft to take up clearance in bushing.

6. Torque mounting screws to 20 in. lbs. (2.2 Nm).

7. Before re-assembly, locate stator wires against cylinder in order to clear ring gear and flywheel.

8. Attach ground wire or rectifier assembly (early style) to drive housing.

9. Replace flywheel and torque rewind clutch as noted on specification chart.

10. Reassemble rotating screen and blower housing.

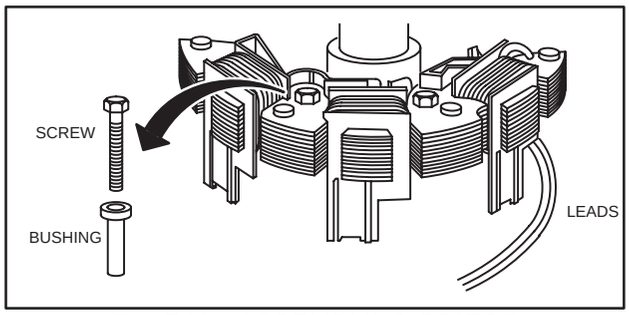

Fig. 744 – ASSEMBLING STATOR

Replace Rectifier

NOTE: Early style rectifier box is replaced by rectifier harness shown in Fig. 745.

1. Cut stator wires close to rectifier so that stator wires remain as long as possible.

2. Discard old rectifier.

3. Strip insulation back 3/8" (9.53 mm) from stator wires.

NOTE: Replacement rectifier has two exposed wires which are already stripped of insulation.

4. Twist and solder each stator wire to a rectifier wire.

5. Insulate each connection with electrical friction tape or shrink tubing. Keep connected areas as compact as possible.

6. Attach ground wire to drive housing using original rectifier mounting screw, Fig. 743.

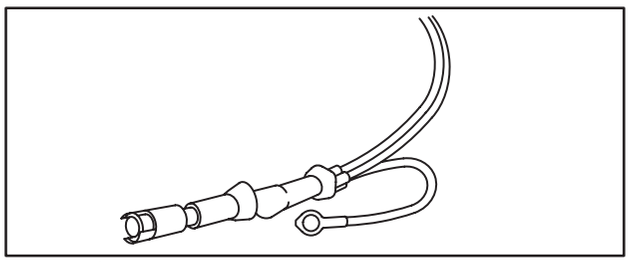

Fig. 745 – REPLACEMENT RECTIFIER

ALTERNATORS, ELECTRIC, MECHANICAL & REWIND STARTERS, STARTER-GENERATORS, (cont'd)

4 AMP NON-REGULATED ALTERNATOR

The 4 amp non-regulated alternator is entirely self contained. It incorporates a solid state rectifier with a fuse. DC output is 4 amps at 3600 RPM. Output will vary with engine RPM and battery voltage, Fig. 746.

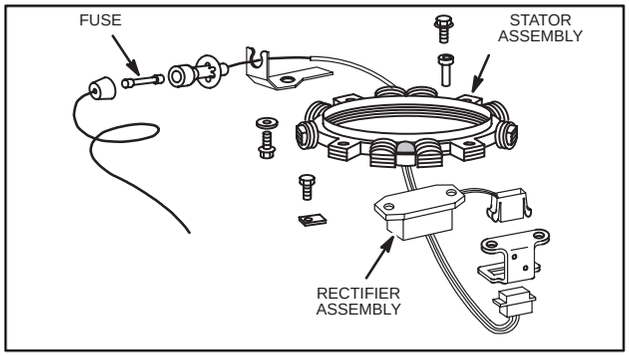

Fig. 746 – ALTERNATOR ASSEMBLY

Condition Found (Fuse Blown)

Check if battery polarity is correct: Negative (–) side of battery should be grounded to engine or frame; positive (+) side of battery to alternator output lead, Fig. 751. If reversed, correct and put in new fuse.

Condition Found (Battery Run Down)

WHEN CHECKING ALTERNATOR COMPONENTS, MAKE THE TEST IN THE FOLLOWING SEQUENCE:

Test Alternator Output

Temporarily disconnect charging output connector from fuse holder and install fuse cap test lead in fuse holder. Leave fuse in place.

1. Insert RED ("Amps") test lead into amps receptacle on meter.
2. Set meter selector switch to DC AMPS position.
3. Set range switch to 16 VA.
4. Zero the meter.
5. Attach RED test lead clip to fuse cap test lead, Fig. 747.
6. Attach BLACK test lead clip to positive (+) battery terminal.
7. With engine running at 3600 RPM, DC output should be no less than 2.5 amps.
8. If no or low output is found, test rectifier.

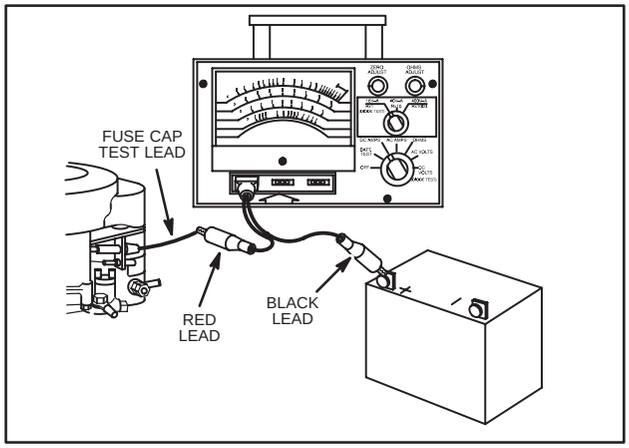

Fig. 747 – TESTING ALTERNATOR OUTPUT

Test Rectifier (Diode Test)

Attached to blower housing baffle is a small black rectifier box. A black lead from the rectifier connects to a single pin in the detachable plug, Fig. 748. Rectifier may be tested on blower housing.

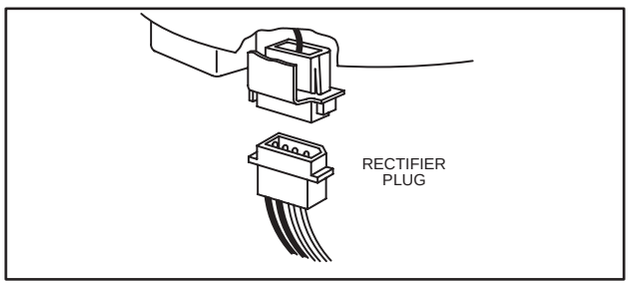

Fig. 748 – RECTIFIER PLUG

1. Insert BLACK ("Diode") test lead into the diode test receptacle on meter.

ALTERNATORS, ELECTRIC, MECHANICAL & REWIND STARTERS, STARTER-GENERATORS, (cont'd)

2. Set meter selector switch to DIODE TEST.
3. Set range switch to DIODE TEST.
4. Attach BLACK test lead clip to fuse cap test lead, Fig. 749.
5. Attach RED test lead clip to a clean unpainted area on engine.
   A. Meter should show a reading (approximately half scale).
   B. If meter does not show a reading, rectifier is defective.
6. Now, reverse test leads.
   A. Meter should not show a reading.
   B. If meter shows a reading, diode is defective.
7. If rectifier tests OK, replace stator. If rectifier is defective, replace rectifier. Then re-test DC output.

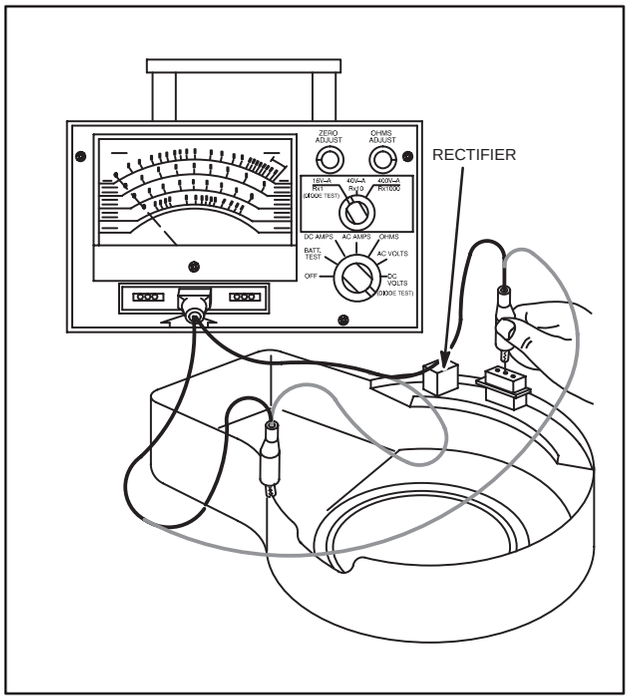

Fig. 749 – TESTING RECTIFIER

7 AMP REGULATED ALTERNATOR – USED ON MODEL SERIES 140000, 170000 AND 190000

The 7 amp regulated alternator uses both a rectifier and a solid state regulator for rapid charging or extra electrical loads. The regulator protects the battery from overcharge. Output will vary with engine RPM and battery voltage, Fig's. 750 and 751.

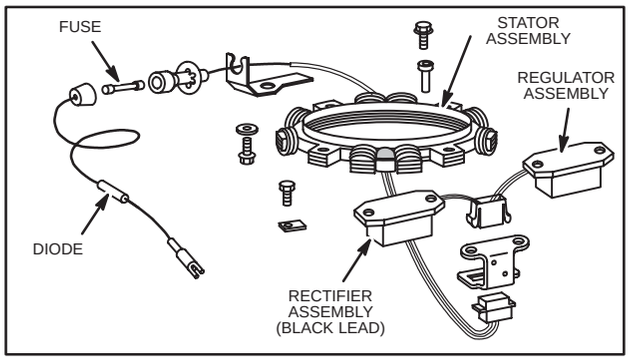

Fig. 750 – 7 AMP ALTERNATOR ASSEMBLY

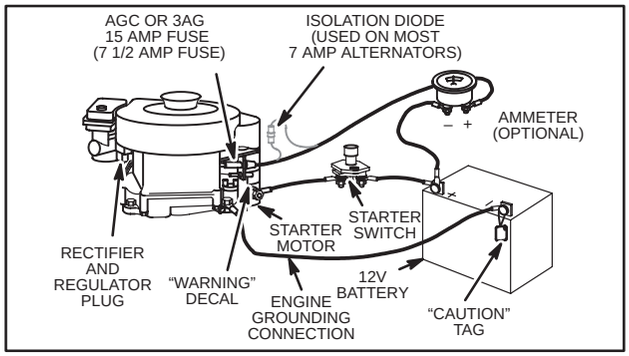

Fig. 751 – TYPICAL WIRING INSTALLATION

Condition Found (Fuse Blown)

Check if battery polarity is correct. Negative (–) side of battery should be grounded to engine or frame; positive (+) side of battery to alternator output lead.

If reversed, correct and put in new fuse.

Condition Found (Battery Run Down)

Certain operating conditions could cause the regulator to malfunction, permitting the battery to discharge even after the engine is stopped. To prevent such a malfunction, and the possible inconvenience of a "dead" battery, an isolation diode assembly (an electronic check-valve) is installed in the alternator output lead, on engines with 7 amp regulated alternators.

NOTE: An isolation diode is not required if the equipment manufacturer routes the alternator output lead through a special ignition switch, which disconnects the alternator when the switch is in the "OFF" position.

WHEN CHECKING ALTERNATOR COMPONENTS, MAKE THE TEST IN THE FOLLOWING SEQUENCE:

ALTERNATORS, ELECTRIC, MECHANICAL & REWIND STARTERS, STARTER-GENERATORS, (cont'd)

Test Isolation Diode (If Equipped)

1. Insert BLACK ("Diode") test lead into the diode test receptacle on meter.
2. Set meter selector switch to DIODE TEST.
3. Set range switch to DIODE TEST.
4. Pierce WHITE wire with a pin and attach RED test lead clip to point "A" as shown in Fig. 752.
5. Pierce RED wire with a pin and attach BLACK test lead clip to point "B."
   A. Meter should show a reading (approximately half scale).
   B. If meter does not show a reading, diode is defective.
6. Now, reverse test leads.
   A. Meter should not show a reading.
   B. If meter shows a reading, diode is defective.
7. Replace defective diode.

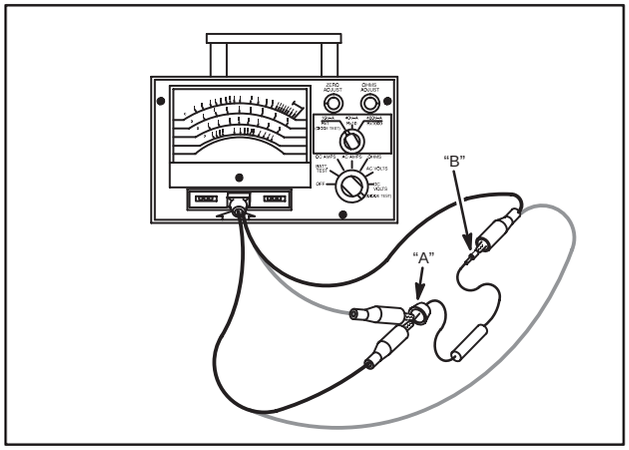

Fig. 752 – TESTING ISOLATION DIODE

Test Alternator Output

Temporarily disconnect charging output connector from fuse holder and install fuse cap test lead in fuse holder. Leave fuse in place.

1. Insert RED ("Amps") test lead into amps receptacle on meter.
2. Set meter selector switch to DC AMPS position.
3. Set range switch to 16 VA.
4. Zero the meter.
5. Attach RED test lead clip to fuse cap test lead, Fig. 753.
6. Attach BLACK test lead clip to positive (+) battery terminal.
7. With engine running at 3600 RPM, DC output should be between 1 and 7 amps DC, depending upon battery voltage. For instance, if battery voltage was 12.6 volts, DC output would be approximately 1 amp. If battery voltage was below 11 volts, DC output would be 7 amps.
8. If low or no output is found, the next step is to test for "Shorts."

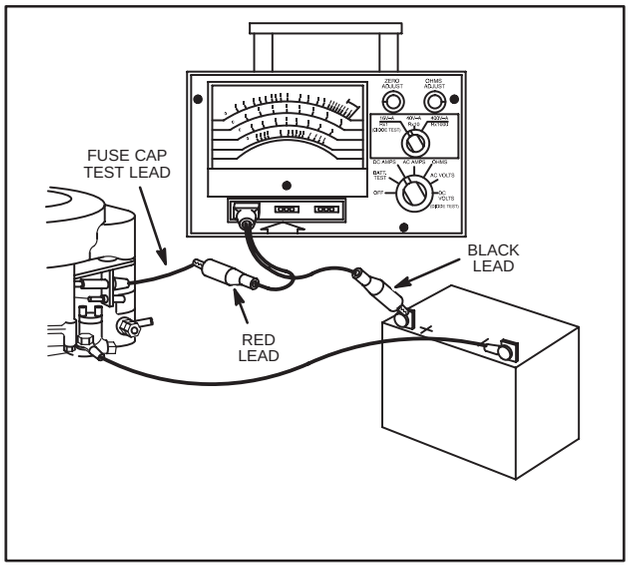

Fig. 753 – TESTING ALTERNATOR OUTPUT

Test For Shorts

CAUTION: Do Not Start or Run Engine While Making This Test.

1. Insert BLACK ("Volts") test lead into volts receptacle on meter.
2. Set meter selector to DC VOLTS position.
3. Set range switch to 16 VA.
4. Zero the meter.
5. Attach BLACK test lead clip to fuse cap test lead, Fig. 754.
6. Attach RED test lead clip to positive (+) battery terminal.
7. There should be no reading.
8. If meter displays battery voltage, this indicates that stator, rectifier, or regulator is defective.

ALTERNATORS, ELECTRIC, MECHANICAL & REWIND STARTERS, STARTER-GENERATORS, (cont'd)

9. Unplug the regulator – rectifier plug located under the blower housing.

   A. If the meter then displays no reading, the regulator-rectifier is defective. Further testing is necessary.

   B. If the meter still displays battery voltage, the stator is grounded. Check for bare wires or other obvious defects. If grounded leads are not visible, replace the stator.

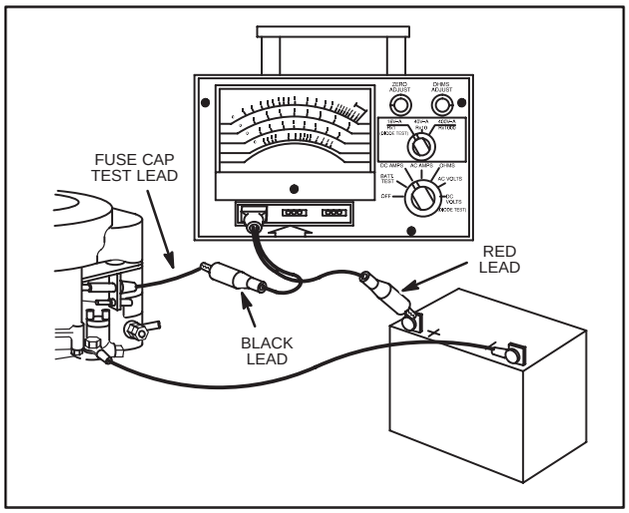

Fig. 754 – TESTING FOR SHORTS

Test Rectifier

Remove blower housing from engine. The rectifier and regulator are attached to the blower housing baffle. The rectifier has two black leads.

1. Insert BLACK ("Diode") test lead into the diode test receptacle on meter.
2. Set meter selector switch to DIODE TEST.
3. Set range switch to DIODE TEST.
4. Attach RED test lead clip to a clean, unpainted area on blower housing, Fig. 755.
5. Touch BLACK test lead clip to one of the rectifier terminal sockets in the plastic connector.

   A. Meter should show a reading (approximately half scale).

   B. If meter does not show a reading, rectifier is defective.

6. Reverse test leads.

   A. Meter should not show a reading.

   B. If meter shows a reading, rectifier is defective.

7. Repeat Steps 4 through 6 with other rectifier terminal socket.

   A. Results must be the same.

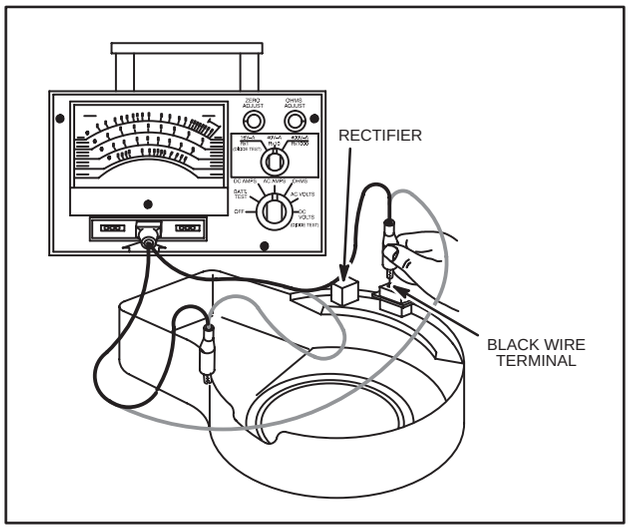

Fig. 755 – TESTING RECTIFIER

Test Regulator

The regulator has one red lead and one white lead.

1. Insert BLACK ("Diode") test lead into the diode test receptacle on meter.
2. Set meter selector switch to DIODE TEST.
3. Set range switch to DIODE TEST.
4. Attach RED test lead clip to a clean, unpainted area on blower housing, Fig. 756.
5. Touch BLACK test lead clip to the white lead terminal in the plastic connector.

   A. Meter should show a reading (approximately half scale).

   B. If meter does not show a reading, regulator is defective.

6. Reverse test leads.

   A. Meter should not show a reading.

   B. If meter shows a reading, regulator is defective.

7. Attach RED test lead clip to a clean, unpainted area on blower housing.
8. Touch BLACK test lead clip to the red lead terminal in the plastic connector.

   A. Meter should not show a reading.

   B. If meter shows a reading, regulator is defective.

ALTERNATORS, ELECTRIC, MECHANICAL & REWIND STARTERS, STARTER-GENERATORS, (cont'd)

9. Reverse test leads.

   A. Meter should not show a reading.

   B. If meter shows a reading, regulator is defective.

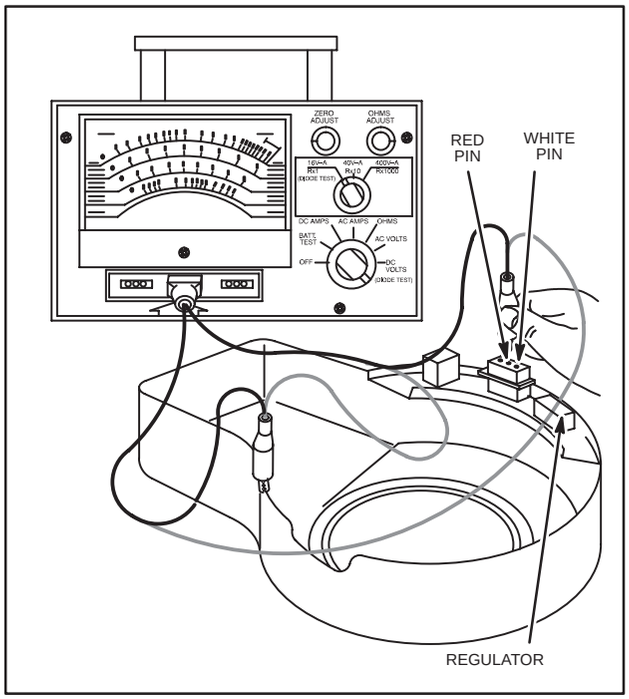

Fig. 756 – TESTING REGULATOR

DC ONLY ALTERNATOR

The DC alternator provides DC current for charging a 12 volt battery. The current from the alternator is unregulated and is rated at 3 amps with an engine speed of 3600 rpm.

NOTE: When checking alternator components, make the test in the following sequence:

DC ONLY ALTERNATOR
Test DC Amps Output

1. Insert RED test lead into 10 A receptacle in meter.
2. Insert BLACK test lead into COM receptacle in meter.
3. Rotate selector to **A** ⎓ (DC amps) position.
4. Attach RED test lead clip to DC output terminal, Fig. 757.
5. Attach BLACK test lead clip to positive (+) battery terminal.
6. Run engine at 3600 RPM, output should be between 2 to 4 amps DC.

   A. Output will vary with battery voltage. If battery voltage is at its maximum, output may be approximately 2 amps.

7. If no or low output is found, test diode.

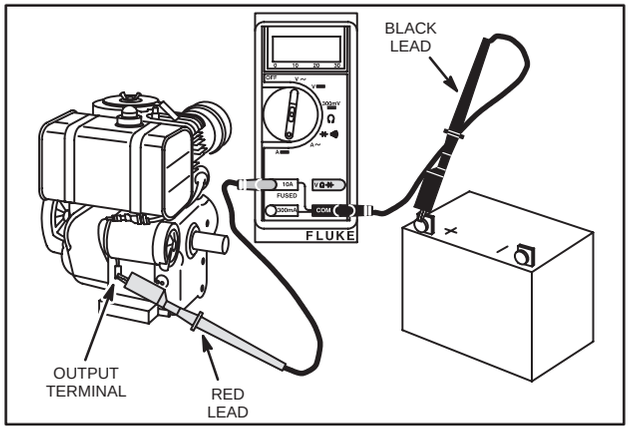

Fig. 757 – TESTING ALTERNATOR OUTPUT

Test Diode

1. In the Diode Test position, the meter will display the forward voltage drop across the diode(s). If the voltage drop is less than 0.7 volts, the meter will "Beep" once as well as display the voltage drop. A continuous tone indicates continuity (shorted diode). An incomplete circuit (open diode) will be displayed as "OL."
2. Insert RED test lead into **V** Ω ⊣◀ receptacle in meter.
3. Insert BLACK test lead into COM receptacle in meter.
4. Rotate selector to ⊣◀))) (Diode Test) position.
5. Attach RED test lead clip to point "A" and Black test lead clip to point "B," Fig. 758. (It may be necessary to pierce wire with a pin as shown.)

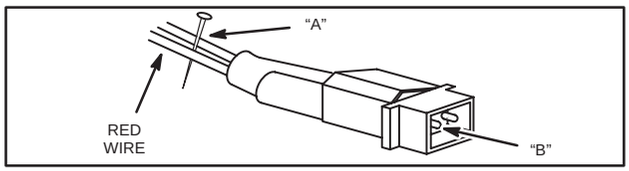

Fig. 758 – TESTING DIODE

   A. If meter "Beeps" once, diode is OK.

   B. If meter makes a continuous tone, diode is defective (shorted).

   C. If meter displays "OL," proceed to step 5.

6. Reverse test leads.

ALTERNATORS, ELECTRIC, MECHANICAL & REWIND STARTERS, STARTER-GENERATORS, (cont'd)

AC ONLY ALTERNATOR

The AC alternator provides current for headlights only. Current for the lights is available as long as the engine is running. The output depends upon engine speed. 12 volt lights with a total rating of 60 to 100 watts may be used. With lights rated at 70 watts, the voltage rises from 8 volts at 2400 RPM to 12 volts at 3600 RPM, so the brightness of the light changes with the engine speed.

Test AC Voltage Output

1. Insert RED test lead into **V** Ω ⊣⊢ receptacle in meter.
2. Insert BLACK test lead into COM receptacle in meter.
3. Rotate selector to V∼ (AC volts) position.
4. Attach RED test lead clip to AC output terminal, Fig. 759.
5. Attach BLACK test lead clip to engine ground.
6. With engine running at 3600 RPM, AC output should be no less than 14 volts.

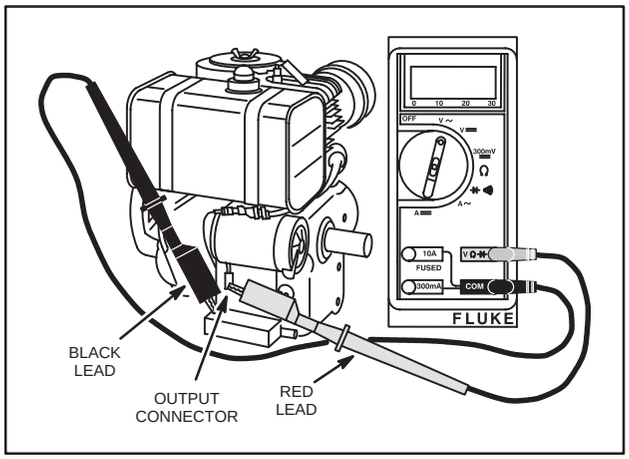

Fig. 759 – TESTING AC OUTPUT

DUAL CIRCUIT ALTERNATOR – FUSE TYPE (EARLY STYLE)

The dual circuit alternator provides DC current for battery charging and an independent AC circuit for headlights. The battery is not used for lights, so lights are available even if battery is disconnected or removed.

Current for lights is available as long as the engine is running. The output depends upon engine speed, so brightness of the lights changes with engine speed. 12 volt lights with a total rating of 60 to 100 watts may be used. With lights rated at 70 watts, the voltage rises from 8 volts at 2400 RPM to 12 volts at 3600 RPM.

The current from the DC side of the alternator is unregulated and is rated at 3 amps. The output rises from 2 amps at 2400 RPM to 3 amps at 3600 RPM. There are two external connections. A 7.5 amp fuse protects the 3 amp charging circuit and rectifier from burnout due to improper (reverse polarity) battery connections.

The 5 amp lighting alternator does not require a fuse as a short circuit will not damage it, Fig's. 760 and 761.

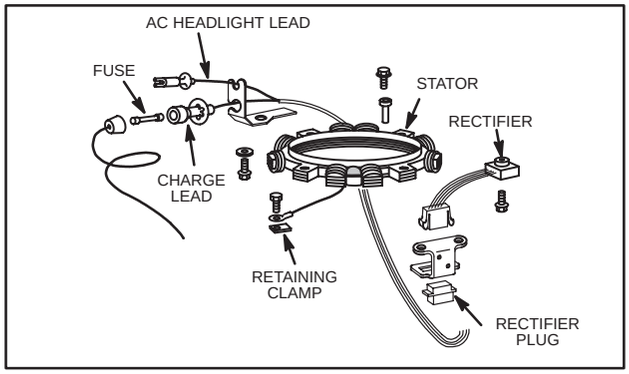

Fig. 760 – ALTERNATOR ASSEMBLY

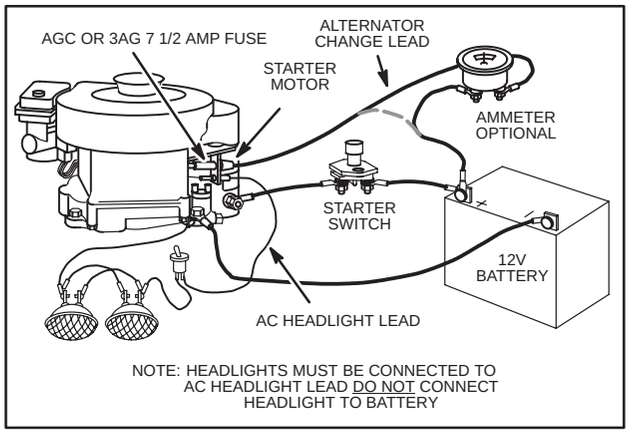

Fig. 761 – TYPICAL WIRING INSTALLATION

Check Dual Circuit Alternator

Fuse Blown

Check if battery polarity is correct: Negative (–) side of battery should be grounded to engine or frame; positive (+) side of battery to (fused) alternator output lead, Fig. 761. If reversed, correct and put in new fuse.

WHEN CHECKING ALTERNATOR COMPONENTS, MAKE THE TEST IN THE FOLLOWING SEQUENCE:

ALTERNATORS, ELECTRIC, MECHANICAL & REWIND STARTERS, STARTER-GENERATORS, (cont'd)

Test Alternator Output

1. Insert RED ("AMPS") test lead into amps receptacle on meter.
2. Set meter selector switch to DC AMPS position.
3. Set range switch to 16 VA.
4. Zero the meter.
5. Attach RED test lead clip to DC output terminal, Fig. 762.
6. Attach BLACK test lead clip to positive (+) battery terminal.

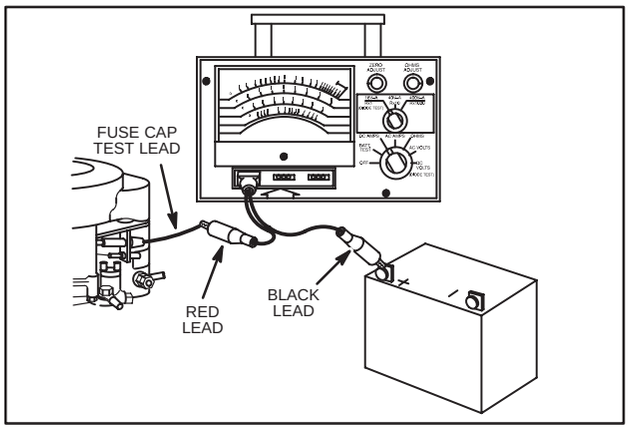

Fig. 762 – TESTING ALTERNATOR OUTPUT

7. With engine running at 3600 RPM output should be between 2-4 AMPS DC.

NOTE: Output will vary with battery voltage. If battery voltage is at its maximum, output will be approximately 2 amps.

8. If no output or low output is found, test rectifier.

Test Rectifier

Disconnect stator wires from rectifier plug and remove blower housing from engine. The rectifier is attached to the blower housing baffle.

1. Insert BLACK ("Diode") test lead into the diode test receptacle on meter.
2. Set meter selector switch to DIODE TEST.
3. Set range switch to DIODE TEST.
4. Attach RED test lead clip to a clean, unpainted area on blower housing, Fig. 763.
5. Touch BLACK test lead clip to <u>red</u> rectifier terminal.
   A. Meter <u>should</u> show a reading (approximately half scale).
   B. If meter does not show a reading, rectifier is defective.
6. Reverse test leads.
   A. Meter <u>should not</u> show a reading.
   B. If meter shows a reading, rectifier is defective.
7. Repeat Steps 4 through 6 with the two <u>black</u> rectifier terminals.
   A. Results <u>must</u> be the same.
8. If rectifier tests OK, check stator for bare wires or other obvious defects. If shorted leads are not visible, replace the stator.

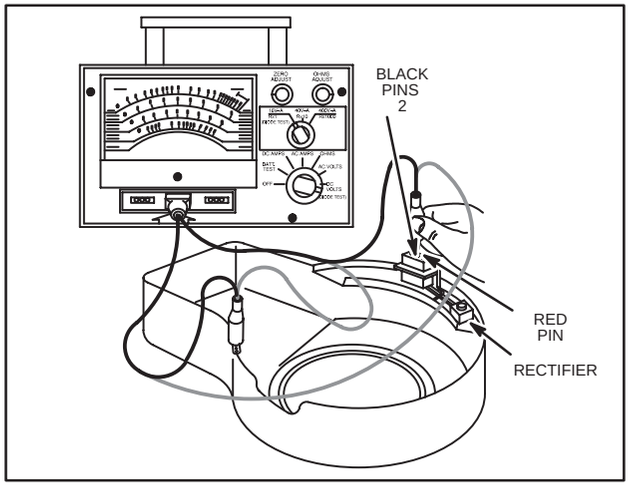

Fig. 763 – TESTING RECTIFIER

AC Output Test

1. Insert BLACK ("VOLTS") test lead into volts receptacle on meter.
2. Set meter selector switch to AC VOLTS position.
3. Set range switch to 16 VA.
4. Zero the meter.
5. Attach RED test lead clip to AC output terminal, Fig. 764.
6. Attach BLACK test lead clip to engine ground.
7. With engine running at 3600 RPM, AC output should be no less than 14 volts.
8. If no or low output is found, replace the stator.

ALTERNATORS, ELECTRIC, MECHANICAL & REWIND STARTERS, STARTER-GENERATORS, (cont'd)

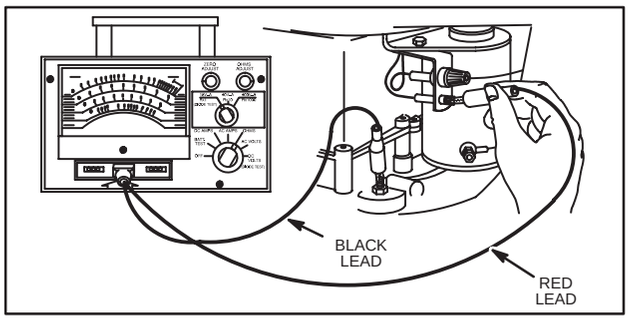

Fig. 764 – TESTING AC OUTPUT

DUAL CIRCUIT ALTERNATOR (Current Style)

The dual circuit alternator uses a single polarized plug with two pins. One pin is for charging the battery and the second is for the lights. Earlier dual circuit alternators used a separate connector for each of the circuits, Fig. 765.

The dual circuit alternator provides DC current for battery charging and an independent AC circuit for headlights. The battery is not used for lights, so lights are available even if battery is disconnected or removed.

Current for lights is available as long as the engine is running. The output depends upon engine speed, so brightness of the lights changes with engine speed. 12 volt lights with a total rating of 60 to 100 watts may be used. With lights rated at 70 watts, the voltage rises from 8 volts at 2400 RPM to 12 volts at 3600 RPM.

The current from the DC side of the alternator is unregulated and is rated at 3 amps. The output rises from 2 amps at 2400 RPM to 3 amps at 3600 RPM.

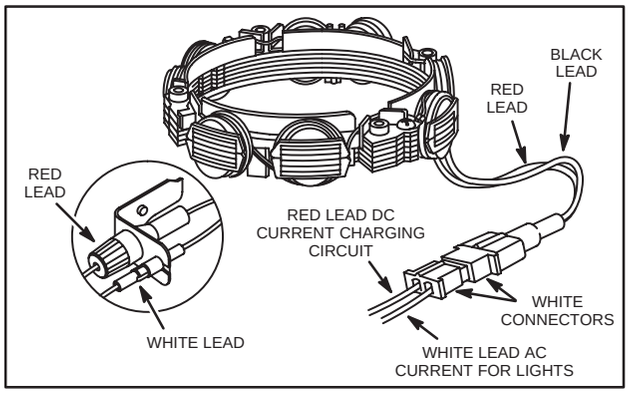

Fig. 765 – DUAL CIRCUIT ALTERNATOR

NOTE: When checking alternator components, make tests in the following sequence:

Test DC Amps Output

1. Insert RED test lead into 10 A receptacle in meter.
2. Insert BLACK test lead into COM receptacle in meter.
3. Rotate selector to **A** ⎓ (DC amps) position.
4. Attach RED test lead clip to DC output pin in connector, Fig. 766.
5. Attach BLACK test lead clip to positive (+) battery terminal.

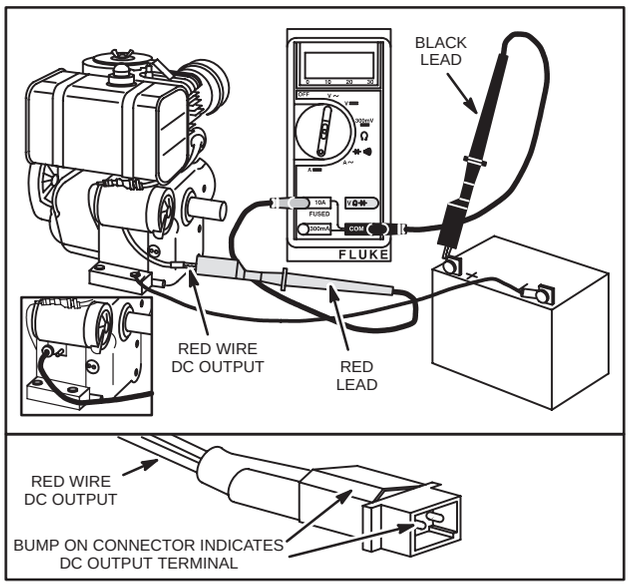

Fig. 766 – TESTING ALTERNATOR OUTPUT

6. With engine running at 3600 RPM output should be between 2 to 4 AMPS DC.
   A. Output will vary with battery voltage. If battery voltage is at its maximum, output will be approximately 2 amps.
7. If no output or low output is found, test diode.

TRI-CIRCUIT ALTERNATOR

The tri-circuit alternator provides alternating current through a single output lead and connector to a wiring harness containing two diodes.

One diode rectifies the AC current to 5 Amps – (negative) DC for lights. The second diode rectifies the AC current to 5 Amps + (positive) DC for battery charging and external loads, such as an electric clutch, Fig. 767.

ALTERNATORS, ELECTRIC, MECHANICAL & REWIND STARTERS, STARTER-GENERATORS, (cont'd)

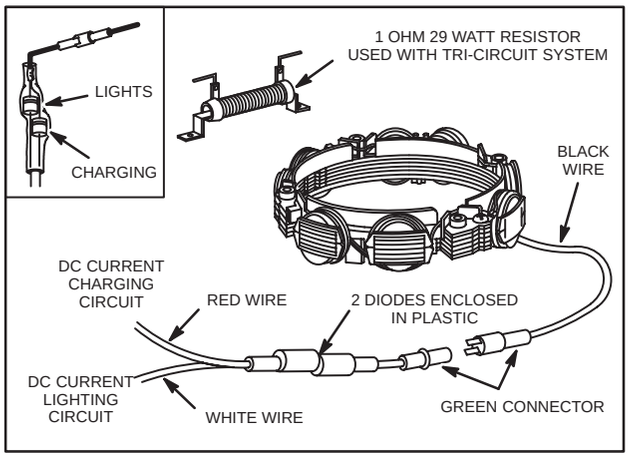

Fig. 767 – TRI-CIRCUIT ALTERNATOR

NOTE: Some equipment manufacturers supply the diodes as an integral part of the equipment wiring harness.

A 1 OHM 20 Watt resistor is sometimes placed in series with the (+) DC charging lead, limiting the charging current to approximately 3 amps when the clutch is not engaged. When the clutch is engaged the resistor is bypassed allowing full output to the battery and clutch.

NOTE: The 1 OHM 20 Watt resistor is supplied by the equipment manufacturer, when required.

Test AC Voltage Output

1. Insert RED test lead into **V** Ω ⊣⊢ receptacle in meter.
2. Insert BLACK test lead into COM receptacle in meter.
3. Rotate selector to V∼ (AC volts) position.
4. Attach RED test lead clip to output terminal, Fig. 768.
5. Attach BLACK test lead clip to engine ground.

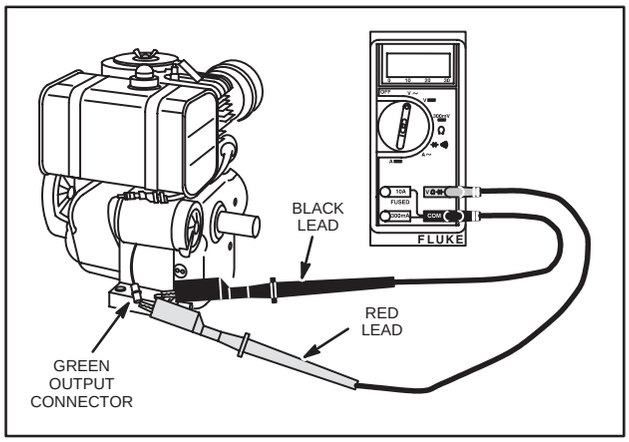

Fig. 768 – TESTING ALTERNATOR OUTPUT

6. With engine running at 3600 RPM, output should be no less than 28 Volts AC.
7. If no output or low output is found, replace stator.
8. If alternator output is good, test diodes located in wiring harness.

Diode Test

NOTE: One diode is for the charging circuit and the other diode is for the lighting circuit.

In the Diode Test position, the meter will display the forward voltage drop across the diode(s). If the voltage drop is less than 0.7 volts, the meter will "Beep" once as well as display the voltage drop. A continuous tone indicates continuity (shorted diode) An incomplete circuit (open diode) will be displayed as "OL."

Charging Circuit (Red Wire B+)

1. Insert RED test lead into **V** Ω ⊣⊢ receptacle in meter.
2. Insert BLACK test lead into COM receptacle in meter.
3. Rotate selector to ⊣⊢))) (Diode Test) position.
4. Attach BLACK test lead clip to point "A," Fig. 769. (It may be necessary to pierce wire with a pin as shown.)
5. Insert RED test lead probe into harness connector.
   A. If meter "Beeps" once, diode is OK.
   B. If meter makes a continuous tone, diode is defective (shorted). Replace.
   C. If meter displays "OL," proceed to step 6.

ALTERNATORS, ELECTRIC, MECHANICAL & REWIND STARTERS, STARTER-GENERATORS, (cont'd)

6. Reverse test leads.

   A. If meter "Beeps" once, diode is installed backwards.

   B. If meter still displays "OL," diode is defective (open). Replace.

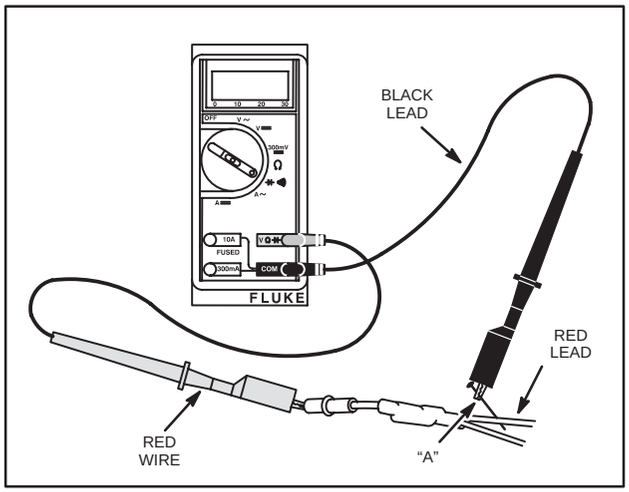

Fig. 769 – DIODE TESTING – CHARGING CIRCUIT

Lighting Circuit (White Wire B–)

1. Insert RED test lead into **V** Ω ⊣⊢ receptacle in meter.

2. Insert BLACK test lead into COM receptacle in meter.

3. Rotate selector to ⊣⊢))) (Diode Test) position.

4. Attach RED test lead clip to point "A," Fig. 770. (It may be necessary to pierce wire with a pin as shown.)

5. Insert BLACK test lead probe into harness connector.

   A. If meter "Beeps" once, diode is OK.

   B. If meter makes a continuous tone, diode is defective (shorted). Replace.

   C. If meter displays "OL," proceed to step 6.

6. Reverse test leads.

   A. If meter "Beeps" once, diode is installed backwards.

   B. If meter still displays "OL," diode is defective (open).

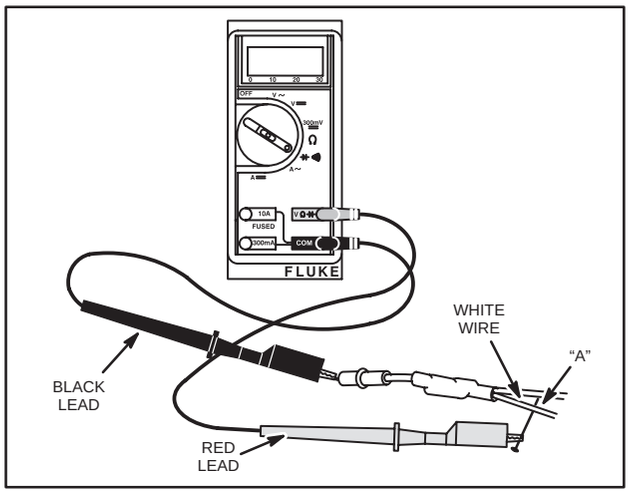

Fig. 770 – DIODE TESTING – LIGHTING CIRCUIT

QUAD CIRCUIT ALTERNATOR

The quad circuit alternator system provides AC current through two output leads to the regulator-rectifier. The regulator-rectifier converts AC current to DC and provides unregulated current (5 amps DC–) for lighting and regulated current (5 amps DC+) for charging the battery. The charging rate will vary with engine RPM and temperature.

NOTE: The quad circuit and 10-16 amp regulated system use the same stator.

NOTE: When checking alternator components, make tests in the following sequence:

Test AC Voltage Output

1. Insert RED test lead into **V** Ω ⊣⊢ receptacle in meter.

2. Insert BLACK test lead into COM receptacle in meter.

3. Rotate selector to V∼ (AC volts) position.

4. Attach RED test lead clip to one of the output pins in the yellow connector, Fig. 771.

5. Attach BLACK test lead clip to the other output pin. (Test lead clips may be attached to either output pin.)

6. With engine running at 3600 RPM, AC output should be no less than 20 volts AC.

7. If no or low output is found, replace stator.

ALTERNATORS, ELECTRIC, MECHANICAL & REWIND STARTERS, STARTER-GENERATORS, (cont'd)

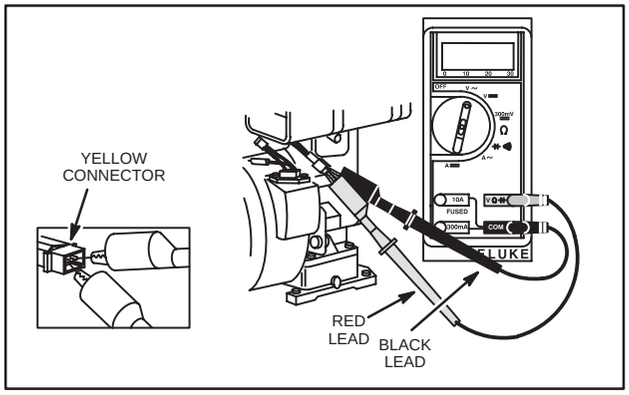

Fig. 771 – TESTING ALTERNATOR OUTPUT

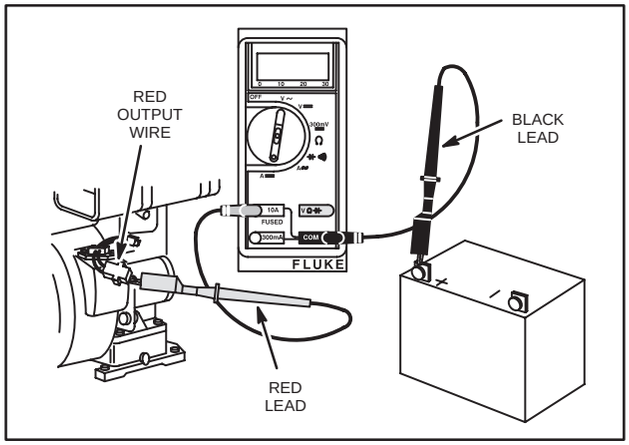

Fig. 772 – TESTING REGULATOR OUTPUT

Test Charging Circuit (DC+)

NOTE: Regulator-rectifier will not function unless it is grounded to engine. Make sure the regulator-rectifier is securely mounted to engine.

When testing regulator-rectifier for amperage output a 12 volt battery with a minimum charge of 5 volts is required. There will be no charging output if battery voltage is below 5 volts.

NOTE: Connect test leads before starting engine. Be sure connections are secure. If a test lead vibrates loose while engine is running, regulator-rectifier may be damaged.

1. Insert RED test lead into 10 A receptacle in meter.
2. Inset BLACK test lead into COM receptacle in meter.
3. Rotate selector to **A** ⎓ (DC amps) position.
4. Attach RED test lead clip to charging output pin (red wire), Fig. 772.
5. Attach BLACK test lead clip to positive (+) battery terminal.
6. With engine running at 3600 RPM output should be 3 to 5 amps.

Amperage will vary with battery voltage, for example, if battery voltage was below 11 volts output reading would be approximately 5 amps. If battery voltage is at its maximum, the amperage will be less.

7. If no output or low output is found, replace regulator-rectifier.

Test Lighting Circuit (DC-)

The black wire from the regulator-rectifier provides 5 amps (-) DC and is used only for lighting. If the headlights do not operate, make sure that the problem is not with the bulbs, wiring and/or light switch.

To test the lighting circuit the following tools are required.

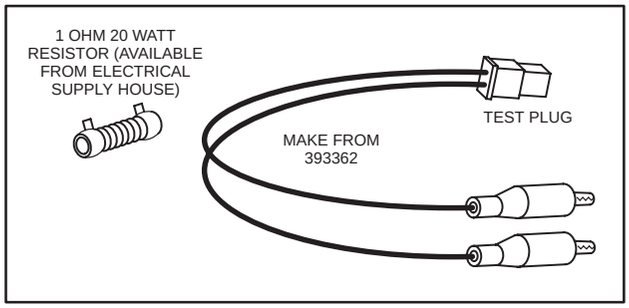

Fig. 773 – TEST EQUIPMENT

1. Insert RED test lead into 10 A receptacle in meter.
2. Inset BLACK test lead into COM receptacle in meter.

ALTERNATORS, ELECTRIC, MECHANICAL & REWIND STARTERS, STARTER-GENERATORS, (cont'd)

3. Rotate selector to **A** ⎓ (DC amps) position.

4. Connect test harness to output connector and attach alligator clips to 1 ohm 20 watt resistor as shown in Fig. 774.

5. Attach RED test lead clip to resistor, and BLACK test lead clip to positive (+) battery terminal.

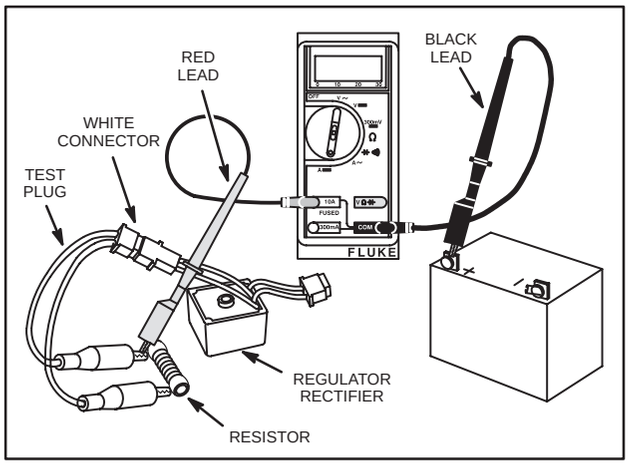

Fig. 774 – TESTING LIGHTING CIRCUIT

6. With engine running at 3600 RPM output on the meter should be approximately 8 amps.

7. If no output or low output is found, replace the regulator-rectifier.

CAUTION: Resistor gets hot! Conduct test as quickly as possible.

5 & 9 AMP REGULATED ALTERNATOR

The 5 & 9 amp regulated alternator systems provide AC current through a single lead to the regulator-rectifier. The regulator-rectifier converts the AC current to DC, and regulates current to the battery. The charging rate will vary with engine RPM, battery state of charge, and temperature.

Alternator output (5 or 9 amp) is determined by the flywheel alternator magnet size. The stator and regulator-rectifier are the same for the 5 and 9 amp system.

The 5 & 9 amp regulated system and the Tri-Circuit system use the same stator.

NOTE: When checking alternator components, make tests in the following sequence:

Testing AC Voltage Output

Temporarily, disconnect stator wire harness from regulator-rectifier.

1. Insert RED test lead into **V** Ω ⊣⊢ receptacle in meter.

2. Insert BLACK test lead into COM receptacle in meter.

3. Rotate selector to V∼ (AC volts) position.

4. Attach RED test lead clip to output terminal, Fig. 775.

5. Attach BLACK test lead clip to engine ground.

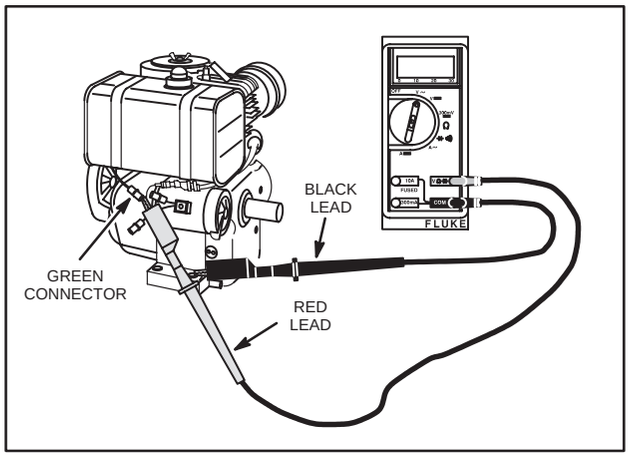

Fig. 775 – TESTING ALTERNATOR OUTPUT

6. With the engine running at 3600 RPM, AC output should be no less than:

28 Volts AC – 5 Amp System
40 Volts AC – 9 Amp System

7. If no or low output is found, replace the stator.

Testing Regulator-Rectifier

NOTE: Regulator-rectifier will not function unless it is grounded to engine. Make sure the regulator-rectifier is securely mounted to engine.

When testing regulator-rectifier for amperage output, a 12 volt battery with a minimum charge of 5 volts is required. There will be no charging output if battery voltage is below 5 volts.

NOTE: Connect test leads before starting engine. Be sure connections are secure. If a test lead vibrates loose while engine is running, the regulator-rectifier may be damaged.

1. Insert RED test lead into 10 A receptacle in meter.

2. Insert BLACK test lead into COM receptacle in meter.

ALTERNATORS, ELECTRIC, MECHANICAL & REWIND STARTERS, STARTER-GENERATORS, (cont'd)

3. Rotate selector to **A** ⎓ (DC amps) position.

4. Attach RED test lead clip to DC output terminal on regulator-rectifier, Fig. 776.

5. Attach BLACK test lead clip to positive (+) battery terminal.

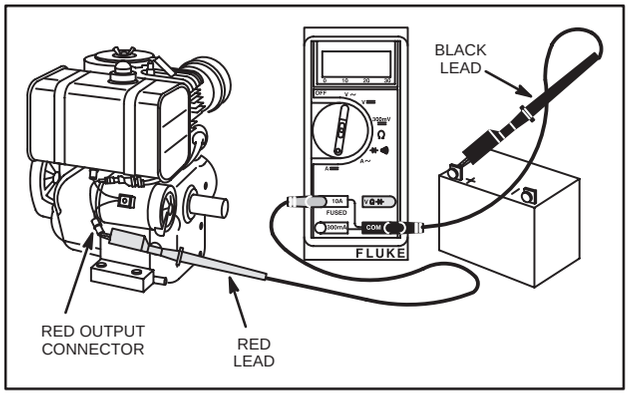

Fig. 776 – TESTING REGULATOR-RECTIFIER

6. With the engine running at 3600 RPM. The output should be:

   *** 3-5 Amps – 5 Amp System**
   *** 3-9 Amps – 9 Amp System**

7. Depending upon battery voltage. For example, if the battery voltage was below 11 volts, the output reading would be 5 or 9 amps, depending upon the alternator system being tested. If battery voltage is at its maximum, the amperage will be less.

8. If no or low output is found, be sure that regulator-rectifier is grounded properly and all connections are clean and secure. If there is still no or low output, replace the regulator-rectifier.

10 AMP REGULATED

The 10 amp regulated alternator system provides AC current to the regulator-rectifier. The regulator-rectifier converts the AC current to DC, and regulates the current, without overcharging the battery. It provides rapid charging and handles extra electrical loads. Output rises from 4.2 amps at 2000 RPM to 10 amps at 3600 RPM.

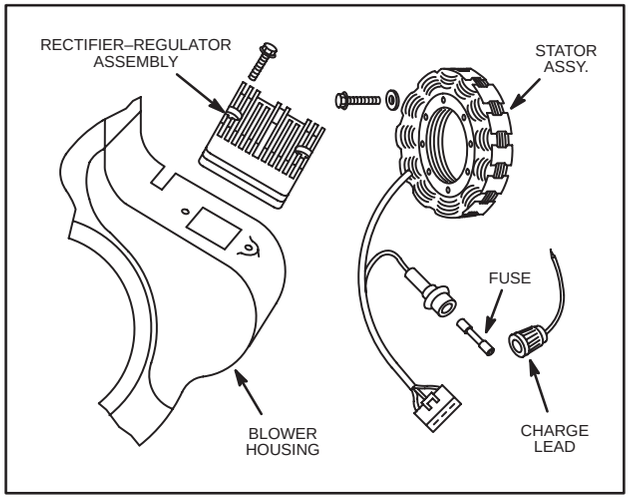

Fig. 777 – ALTERNATOR ASSEMBLY

Check 10 Amp Regulated Alternator

Condition Found (Fuse Blown)

Check if battery polarity is correct. Negative (-) side of battery should be grounded to engine or frame: positive (+) side of battery to alternator output lead.

If reversed, correct and put in new fuse.

WHEN CHECKING THE ALTERNATOR COMPONENTS, MAKE THE TESTS IN THE FOLLOWING SEQUENCE:

Test Alternator Output

Temporarily, disconnect stator wire harness from regulator-rectifier.

1. Insert RED test lead into **V** Ω ⊣⊢ receptacle in meter.

2. Insert BLACK test lead into COM receptacle in meter.

3. Rotate selector to V~ (AC volts) position.

4. Insert RED and BLACK test lead probes into AC output terminals in connector, as shown in Fig. 778.

NOTE: The two black wires in stator harness are AC output leads.

ALTERNATORS, ELECTRIC, MECHANICAL & REWIND STARTERS, STARTER-GENERATORS, (cont'd)

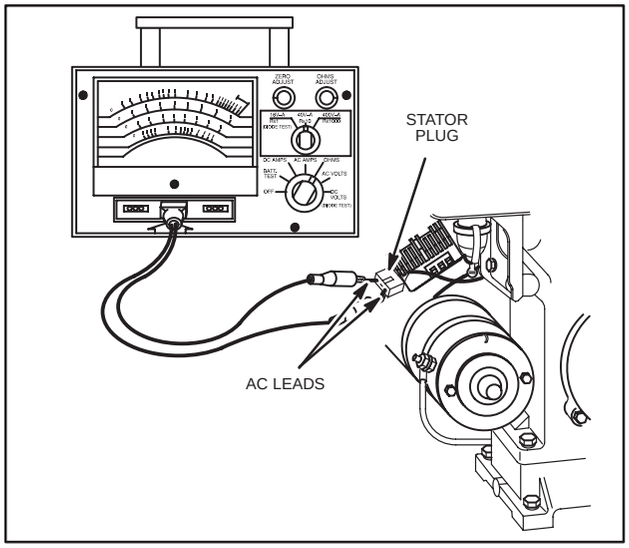

Fig. 778 – TESTING ALTERNATOR OUTPUT

5. With engine running at 3600 RPM, AC output should be no less than 20 volts AC.

6. If output is less than 20 volts AC, check for bare wires or any other obvious defects. If "shorted" leads are not visible, replace the stator.

Test Regulator-Rectifier

Re-connect stator wire harness to regulator-rectifier. Temporarily disconnect charging output connector from fuse holder and install fuse cap test lead in fuse holder. Leave fuse in place.

NOTE: Connect test leads before starting engine. Be sure connections are secure. If a test lead vibrates loose while engine is running, the regulator – rectifier may be damaged.

1. Insert RED test lead into 10 A receptacle in meter.

2. Insert BLACK test lead into COM receptacle in meter.

3. Rotate selector to **A** ⎓ (DC amps) position.

4. Attach RED test lead clip to fuse cap test lead, Fig. 779.

5. Attach BLACK test lead clip to positive (+) battery terminal.

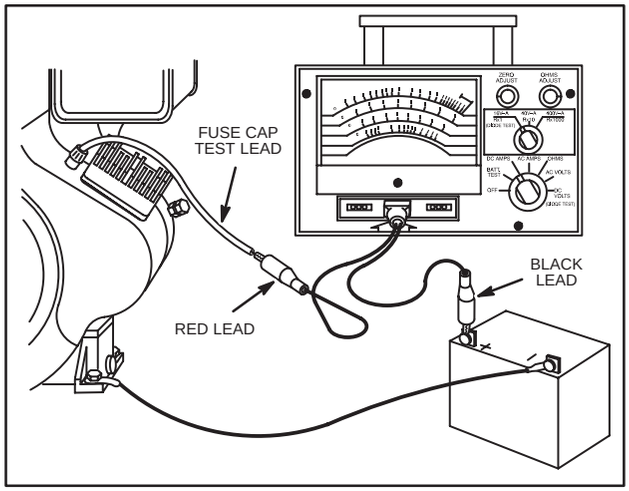

Fig. 779 – TESTING REGULATOR – RECTIFIER

6. With engine running at 3600 RPM, output should be 4-10 amps DC, depending upon battery voltage. For example, if the battery voltage is less than 11 volts,the output would be 10 amps. If battery voltage is at its maximum, DC output will be lower.

7. If no or low output is found, be sure that regulator-rectifier is grounded correctly and all connections are clean and secure. If there is still no or low output, replace the regulator-rectifier.

10 & 16 AMP REGULATED ALTERNATOR

The 10 & 16 amp regulated alternator system provides AC current through two output leads to the regulator-rectifier. The regulator-rectifier converts the AC current to DC, and regulates the current to the battery. The charging rate will vary with engine RPM, battery state of charge, and temperature.

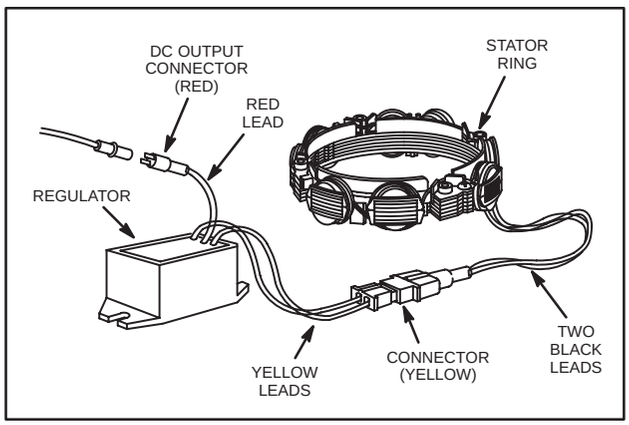

Fig. 780 – 10 & 16 AMP ALTERNATOR ASSEMBLY

ALTERNATORS, ELECTRIC, MECHANICAL & REWIND STARTERS, STARTER-GENERATORS, (cont'd)

Alternator output (10 or 16 Amp) is determined by flywheel alternator magnet size. Therefore, stator and regulator-rectifier are the same for the 10 and 16 amp system.

WHEN CHECKING THE ALTERNATOR COMPONENTS, MAKE THE TESTS IN THE FOLLOWING SEQUENCE:

Test AC Voltage Output

1. Insert RED test lead into **V** Ω ⊣⊢ receptacle in meter.
2. Insert BLACK test lead into COM receptacle in meter.
3. Rotate selector to V∼ (AC volts) position.
4. Insert RED and BLACK test lead probes into output terminals in yellow connector, as shown in Fig. 781. (Meter test clip leads may be attached to either terminal.)

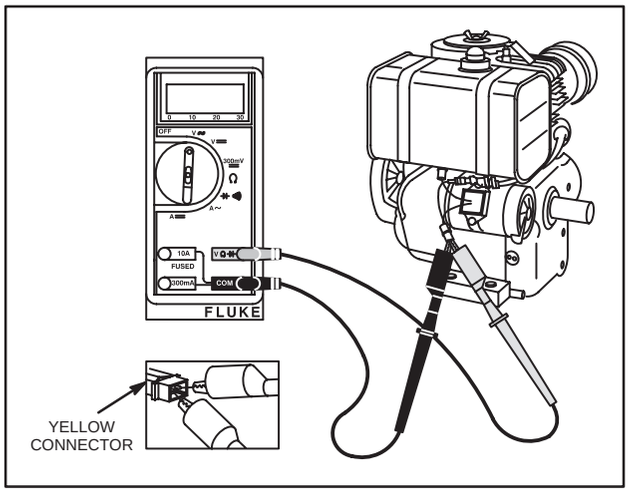

Fig. 781 – TESTING ALTERNATOR OUTPUT

5. With the engine running at 3600 RPM output should be no less than:

   20 Volts – 10 Amp System
   30 Volts – 16 Amp System

6. If alternator output test indicates a 16 Amp system, see special instructions for testing regulator-rectifier.
7. If no or low output is found. check for bare wires or any other obvious defects. If "shorted" leads are not visible, replace the stator.

Test Regulator-Rectifier

NOTE: The Digital Multimeter will withstand DC input of 10 to 20 Amps for up to **30** seconds. When checking DC output of 16 Amp regulated system, use DC Shunt, Tool #19359, to avoid blowing fuse in meter. See special instructions for installation procedure on 16 Amp system.

NOTE: Regulator-rectifier will not function unless it is grounded to engine. Make sure the regulator-rectifier is securely mounted to engine.

When testing regulator-rectifier for amperage output, a 12 volt battery with a minimum charge of 5 volts is required. There will be no charging output if battery voltage is below 5 volts.

NOTE: Connect test leads before starting engine. Be sure connections are secure. If a test lead vibrates loose while engine is running, the regulator-rectifier may be damaged.

Testing Regulator-Rectifier 10 Amp System

1. Insert RED test lead into 10 A receptacle in meter.
2. Insert BLACK test lead into COM receptacle in meter.
3. Rotate selector to **A** ⎓ (DC amps) position.
4. Attach RED test lead clip to DC output terminal on regulator-rectifier, Fig. 782.

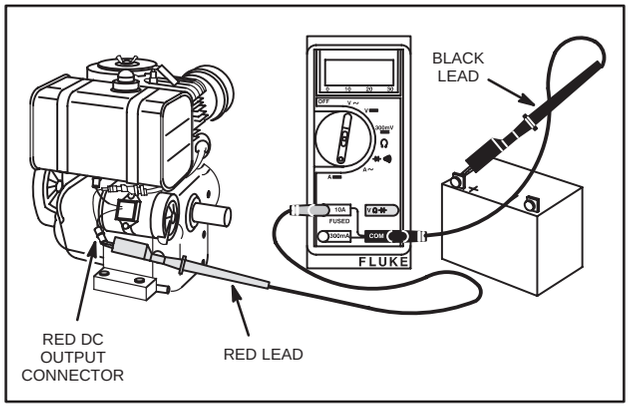

Fig. 782 – TESTING REGULATOR-RECTIFIER

5. Attach BLACK test lead clip to positive (+) battery terminal.
6. With the engine running at 3600 RPM. The output should be:

   *** 3-10 Amps – 10 Amp System**

7. Depending upon battery voltage. For example, if the battery voltage was 10 volts, the output reading would be 10 amps. If battery voltage is at its maximum, the amperage will be less.

ALTERNATORS, ELECTRIC, MECHANICAL & REWIND STARTERS, STARTER-GENERATORS, (cont'd)

8. If no or low output is found, be sure that regulator-rectifier is grounded properly and all connections are clean and secure. If there is still no or low output, replace the regulator-rectifier.

Testing Regulator-Rectifier 16 Amp System

To avoid blowing fuse in meter when testing DC output of 16 Amp system the DC Shunt, Tool # 19359 is required.

The DC Shunt must be installed on the – (negative) terminal of the battery, Fig. 783. All connections must be clean and tight for correct amperage readings.

1. Install shunt on negative battery terminal.
2. Insert RED test lead into **V** Ω ⊣⊢ receptacle in meter and connect to RED post terminal on shunt, Fig. 783.
3. Insert BLACK test lead into COM receptacle in meter and connect to BLACK post terminal on shunt.
4. Rotate selector to **300mV** ⎓ position.
5. Attach RED test lead clip to DC output terminal on regulator-rectifier, Fig. 783.

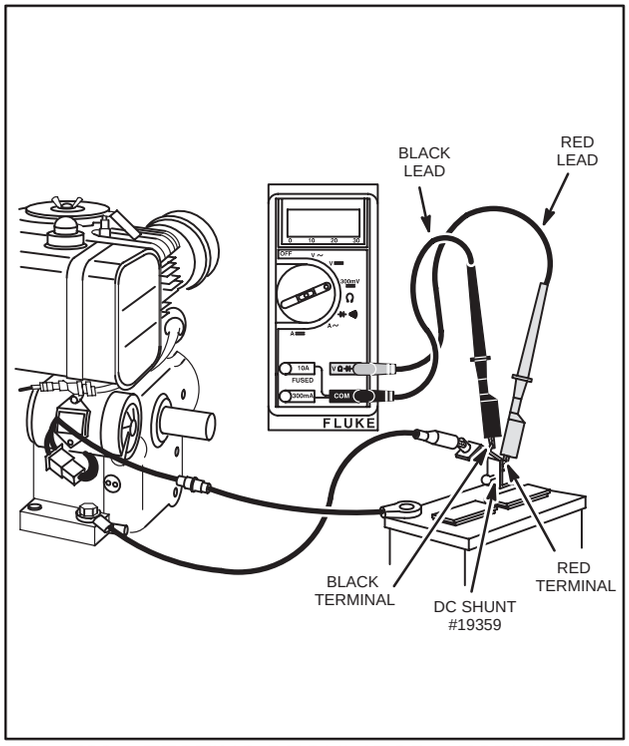

Fig. 783 – TESTING REGULATOR-RECTIFIER 16 AMP SYSTEM WITH DC SHUNT

6. With the engine running at 3600 RPM. The output should be:

   *** 3-16 Amps – 16 Amp System**

7. Depending upon battery voltage. For example, if the battery voltage was below 11 volts, the output reading would be 16 amps. If battery voltage is at its maximum, the amperage will be less.
8. If no or low output is found, be sure the regulator-rectifier is grounded properly and all connections are clean and secure. If there is still no or low output, replace the regulator-rectifier.

In the Diode Test position, the meter will display the forward voltage drop across the diode(s) in the rectifier. If the voltage drop is less than 0.7 volts, the meter will "Beep" once as well as display the voltage drop. A continuous tone indicates continuity (shorted diode) An incomplete circuit (open diode) will be displayed as "OL."

1. Insert RED test lead into **V** Ω ⊣⊢ receptacle in meter.
2. Insert BLACK test lead into COM receptacle in meter.
3. Rotate selector to ⊣⊢))) (Diode Test) position.
4. Attach RED test lead clip to a clean, unpainted area on blower housing. Leave RED test clip attached for remainder of test, Fig. 784.
5. With BLACK test lead probe, touch red rectifier terminal.
   A. Meter will not "Beep," but should display voltage drop between .90-1.0.
   B. If meter displays "OL," or makes a continuous tone, rectifier is defective. Replace.
6. Next, touch one black rectifier terminal with the BLACK test probe.
   A. Meter should "Beep" once.
7. Now touch remaining black rectifier terminal with the BLACK test probe.
   A. Meter should "Beep" once.
   B. If meter displays "OL," or makes a continuous tone when checking black rectifier terminals, the rectifier is defective. Replace.
8. If rectifier tests OK, check stator for bare wires or other obvious defects. If "shorted" leads are not visible, replace the stator.

ALTERNATORS, ELECTRIC, MECHANICAL & REWIND STARTERS, STARTER-GENERATORS, (cont'd)

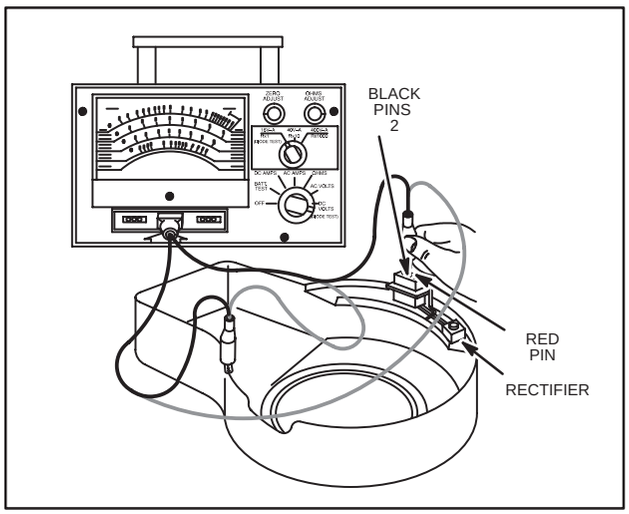

Fig. 784 – TESTING RECTIFIER

AC Output Test

1. Insert RED test lead into **V** Ω ⊣⊢ receptacle in meter.
2. Insert BLACK test lead into COM receptacle in meter.
3. Rotate selector to V~ (AC volts) position.
4. Attach RED test lead clip to AC output terminal, Fig. 785.
5. Attach BLACK test lead clip to engine ground.
6. With engine running at 3600 RPM, AC output should be no less than 14 volts.
7. If no or low output is found, replace stator.

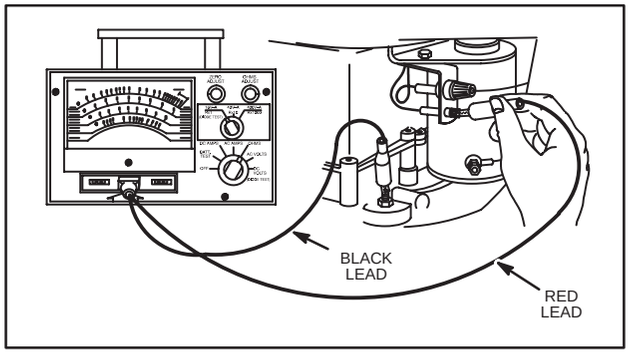

Fig. 785 – TESTING AC OUTPUT

Section 8
CRANKSHAFTS, CAM GEARS

To Remove Crankshaft

The crankshaft and cam gear should always be removed from the crankcase with utmost care to prevent damage to gear and bearing surfaces.

Cast Iron Cylinder Engines

Model Series A, F, H, I, L, M, N, P, S, T, U, WI, WM, 5, 6, 8, 9, 14, 19, 23, 200000, 230000 – Plain Bearings

Remove magneto. Remove connecting rod and piston assembly. Remove burrs and rust from PTO end of crankshaft. Rotate crankshaft to approximate position shown in Fig. 866. Pull out crankshaft from PTO side, twisting slightly, if necessary, to clear cam gear, Fig. 866.

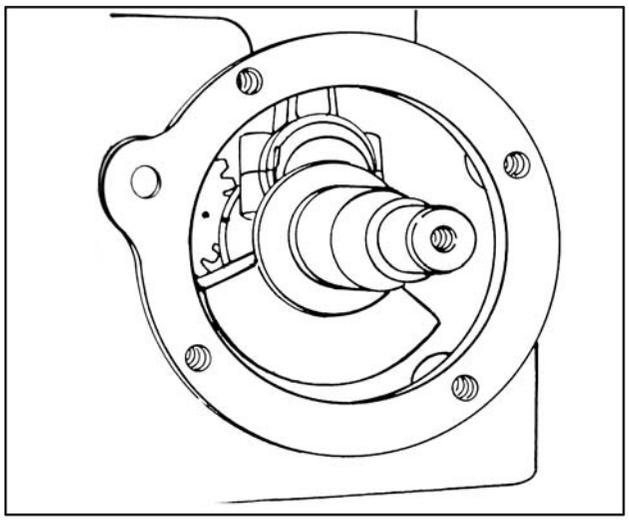

Fig. 866 – REMOVE CRANKSHAFT, A, F, H, I, L, M, N, P, S, T, U, WI, WM, 5, 6, 8

Model Series B, K, Q, R, Z, ZZ, 9, 14, 23

Remove burrs and rust from PTO end of crankshaft. Remove crankcase cover. Remove connecting rod and piston assembly. Revolve crankshaft until crankshaft is pointing upward toward the breather at the rear of the engine at approximately a 45° angle. Then pull crankshaft out from drive side twisting it slightly if necessary, Fig. 867.

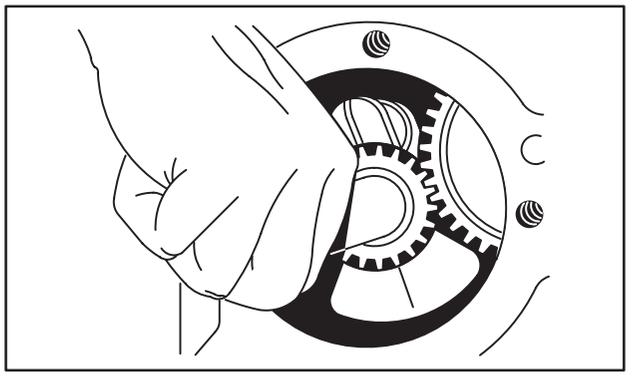

Fig. 867 – REMOVE CRANKSHAFT

Models with Ball Bearings on PTO Side

Remove magneto. Remove connecting rod and piston assembly. Drive out cam gear shaft while holding cam gear to prevent dropping, Fig. 868. Lay cam gear in recess, Fig. 869. Then draw crankshaft from magneto side. Double thrust engines have cap screws inside the crankcase holding the ball bearing in place. These must be removed before crankshaft can be withdrawn.

NOTE: On Models 9, 14, 23 with ball bearings, both crankcase cover and bearing support should be removed.

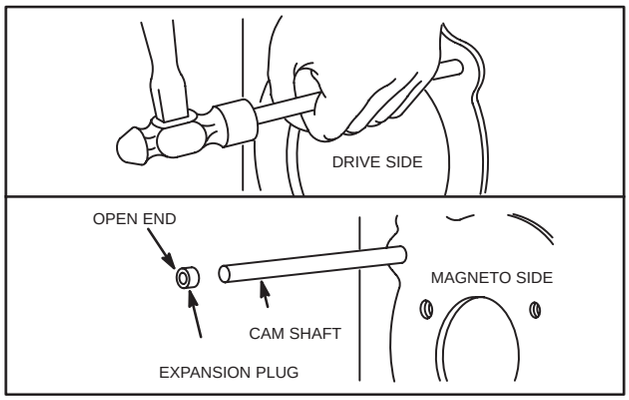

Fig. 868 – REMOVE CAMSHAFT

CRANKSHAFT, CAM GEARS (cont'd)

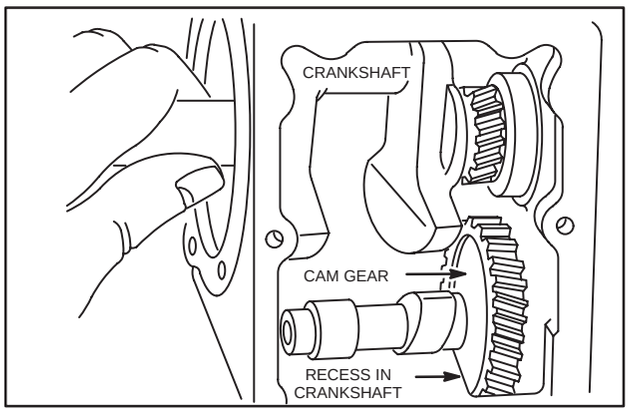

Fig. 869 – REMOVE CRANKSHAFT

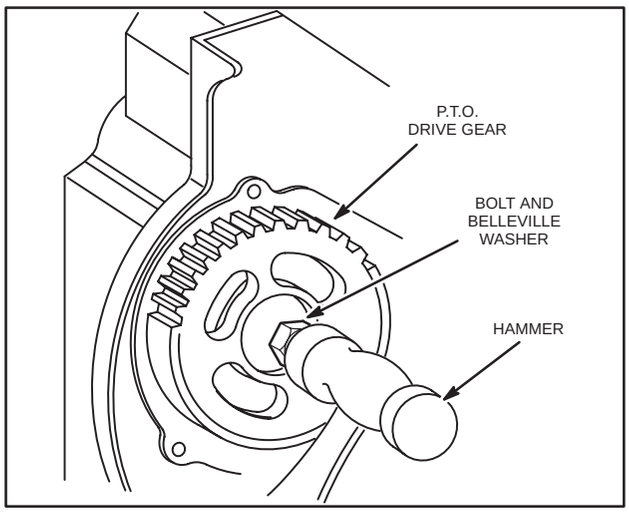

Fig. 871 – REMOVE LONG BOLT

Model Series 300400, 320400

1. Remove short bolt and Belleville washer from PTO drive gear, Fig. 870.

2. Loosen long bolt and Belleville washer two (2) turns on magneto side and tap head of bolt with hammer to loosen cam gear shaft.

3. Turn bolt out while pushing out cam gear shaft, Fig. 871.

4. Remove bolts from cam gear bearing, Fig. 872 and while holding cam gear, remove cam gear bearing and remove cam gear.

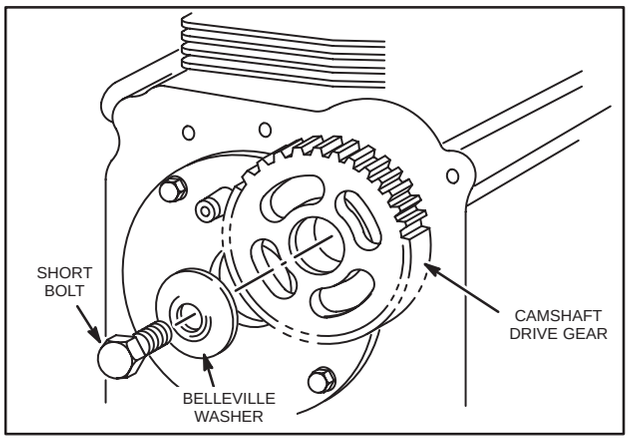

Fig. 870 – REMOVE SHORT BOLT

Model Series 301400, 302400, 325400, 326400

1. Loosen long bolt two (2) turns.

2. Use hammer to drive out cam gear shaft and cam gear plug.

3. Loosen bolt while pushing out cam gear shaft and plug.

4. Remove bolts and camshaft bearing, Fig. 871.

5. Remove camshaft, Fig. 872.

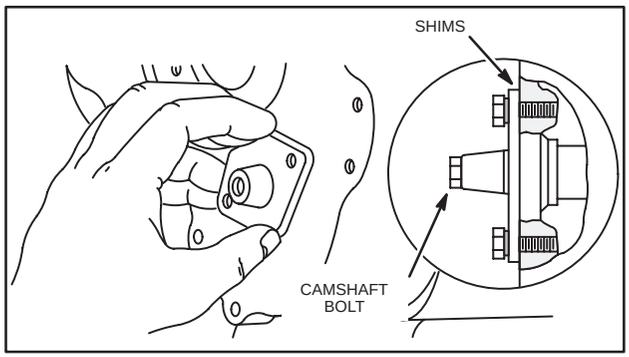

Fig. 872 – REMOVING CAM GEAR BEARING

CRANKSHAFT, CAM GEARS (cont'd)

Aluminum Cylinder Engines

To remove the crankshaft from aluminum alloy engines, remove rust or burrs from the power take off end of the crankshaft. Remove crankcase cover or sump. If sump or cover sticks, tap lightly with soft hammer on alternate sides near dowels. Turn crankshaft to align the crankshaft and cam gear timing marks, lift out the cam gear, then remove the crankshaft. On ball bearing models, the crankshaft and cam gear must be removed together, Fig. 873.

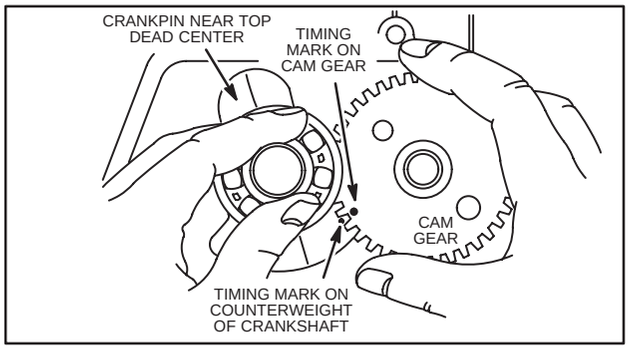

Fig. 873 – BALL BEARING ENGINES

To Remove Cam Gear

If cam gear was not removed to remove crankshaft, use a long thin punch to drive out the camshaft. Do not burr or rivet end of shaft while doing so. Hold cam gear while withdrawing punch so gear does not fall and nick. Always drive camshaft out from drive PTO towards magneto side, Fig. 874.

WARNING: Wear eye protection when using a hammer.

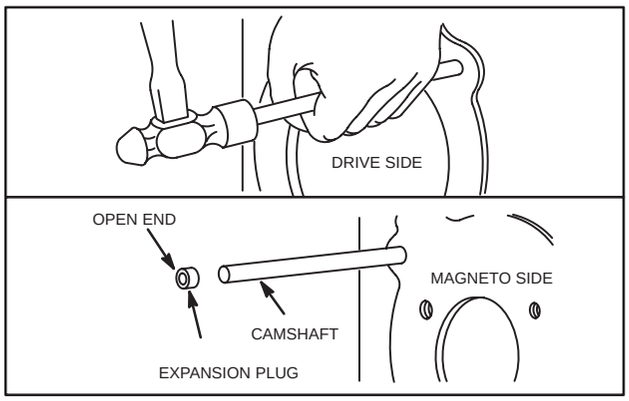

Fig. 874 – REMOVE CAMSHAFT

Model P

Loosen set screw on valve cam inside the crankcase. Remove gear cover. Pull out cam gear and shaft. A burr sometimes forms on the shaft from set screw. If so, set crankcase on side and with two (2) screw drivers gently pry cam gear upward until it is loose.

Models F, FE, FG, FH, FI, FJ

Slide cam gear off camshaft from inside crankcase. DO NOT drive out shaft.

Model FH

Early Model FH engines had a cam gear made of cast iron. The gear may be identified by three diagonal holes drilled next to the lobe. When you receive an engine with this gear ALWAYS replace it with a heat treated gear, Part #21435 (NLA).

Inspect Crankshaft – All Engines

Table No. 54 shows the rejection sizes of the various wear points of the crankshaft. Discard crankshaft if worn smaller than the size shown in table. Keyways should be checked to be sure they are not worn or spread. Remove burrs from keyway edges to prevent scratching the bearing. Fig. 875 shows the various points to be checked on the crankshaft.

WARNING: DO NOT straighten bent crankshafts.

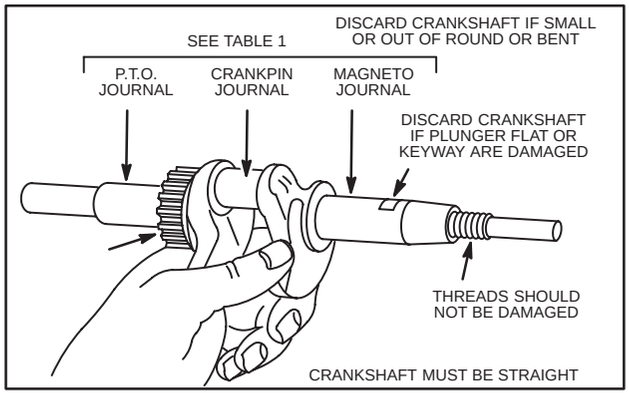

Fig. 875 – CRANKSHAFT CHECK POINTS

NOTE: .020" undersize connecting rods may be obtained for use on reground crankpin journals. Complete instructions are included with the undersize rod. (See Service Bulletin #480 or Illustrated Parts List to find appropriate undersize connecting rod.)

CRANKSHAFT, CAM GEARS (cont'd)

Table No. 54
CRANKSHAFT REJECT SIZES

MODEL SERIES	PTO JOURNAL	CRANKPIN JOURNAL	MAGNETO JOURNAL
ALUMINUM CYLINDER	**Inches**	**Inches**	**Inches**
6B, 60000	.873	.870	.873
8B, 80000*, 82000, 92000*, 93000*, 110900*, 111900*	.873	.996	.873
100200, 100900, 130000	.998	.996	.873
140000, 170000	1.179	1.090	.997#
190000	1.179	1.122	.997#
220000, 250000	1.376	1.247	1.376
CAST IRON CYLINDER	**Inches**	**Inches**	**Inches**
A	.992	.872	1.092
A, AHP, AMT, AP	.983	.872	1.092
B	1.122	.997	1.092
BM	1.1795	.997	1.092
BP	1.803	.997	1.092
FH, FI, FJ, S, T	.872	.872	.967
H, Y	.992	.872	1.092
I, N, NS, U, WI, WM, WMB, WMI	.8736	.747	.8736
IBP, IP, NP	.7863	.747	.8736
K, Z	1.122	.997	1.092
L, M	.872	.871	.967
P, PB	.997	.8715	.967
Q, R, W	1.122	.997	.967
ZM	1.1795	.997	1.092
ZZ	1.1803	.997	1.092
5, 6, 8	.873	.743	.873
9	.983	.873	.983
14, 19, 190000	1.179	.996	1.179
200000	1.179	1.122	1.179
23, 230000□♦	1.376♦	1.184	1.376
240000♦	Ball♦	1.309	Ball
300000, 320000	Ball	1.309	Ball

* Auxiliary Drive Models PTO Journal Reject Size 1.003 in.

\# Synchro-Balanced® Magneto Journal Reject Size 1.179 in.

♦ Gear Reduction PTO 1.179 in.

CRANKSHAFT, CAM GEARS (cont'd)

To Check Cam Gear

Table No. 55 shows reject sizes of the various points where wear occurs on the cam gear. Discard parts if worn smaller than the sizes shown. Check the gear teeth very carefully. Fig. 876 show the various points to be checked on the cam gear.

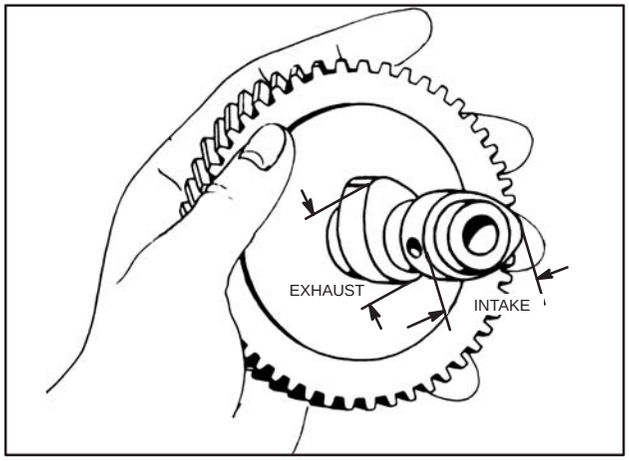

Fig. 876 – CAM GEAR CHECK POINTS

To Check Automatic Spark Advance

Check automatic spark advance on models equipped with "Magnamatic ignition systems," Fig. 877. Place cam gear in normal operating position with the movable weight down. Press the weight down. Release. The spring should lift the weight. If not, the spring is stretched or the weight is binding. Repair or replace.

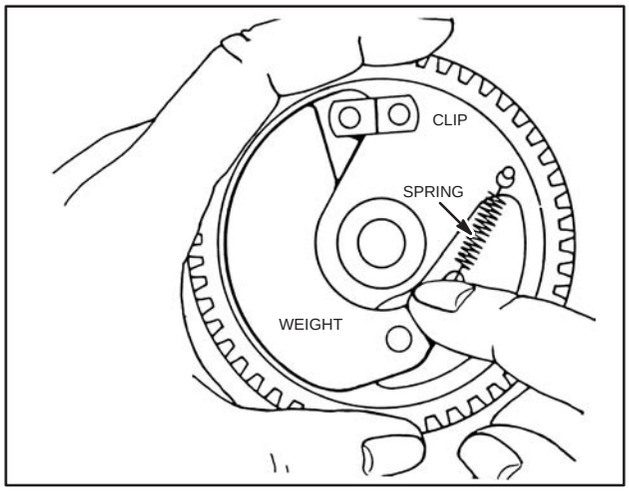

Fig. 877 – CHECKING AUTOMATIC SPARK ADVANCE

Table No. 55
CAM GEAR REJECT SIZES

MODEL SERIES	CAM GEAR JOURNALS	CAM LOBE
ALUMINUM CYLINDER	**Inches**	**Inches**
6B, 8B, 60000, 80000*, 82000, 90000	.498	.883
110000	.436 Mag. .498 P.T.O	.870
100200, 100900, 130000	.498	.950
140000, 170000, 190000	.498	.977
220000, 250000	.498	1.184
CAST IRON CYLINDER	**Inches**	**Inches**
A	.37185	1.187
B	.497	1.429
FH, FI	.497	.971
FJ, H, S, T, Y	.372	1.081
I, N, NS, U, WI, WM, WMB, WMI	.372	.867
K, Z	.497	1.396
L, M	.372	.987
D, P, PB, Early S	.747	2.035
Q	.497	1.272
R, W	.497	1.396
ZZ	.497	1.444, Ex. 1.434, In.
5, 6, 8,	.372	.875
9	.372	1.134
14, 19, 190000	.497	1.115
200000	.497	1.115

CRANKSHAFT, CAM GEARS (cont'd)

Table No. 55, cont'd
CAM GEAR REJECT SIZES

MODEL SERIES	CAM GEAR JOURNALS	CAM LOBE
23, 230000	.497	1.184
240000	.497	1.184
300000	Magneto Side .8105 PTO Side .6145 in.	1.184
320000	Magneto Side .8105 PTO Side .6145 in.	1.184

* Auxiliary Drive Models PTO .751 in.

Model Series 111200, 111900

This cam gear has Easy-Spin® plus a mechanical compression release on the exhaust cam. In the starting position, the cam moves the rocker cam so it will open the exhaust valve at the same time as the Easy-Spin® lobe opens the intake valve. When the engine starts, the cam moves out and lets the rocker cam move down and the exhaust valve operates normally.

1. To check, move cam to the running position, Fig. 878.
2. Push rocker cam against the actuator cam.
3. Release the actuator cam. Actuator cam spring should pull actuator cam against the shoulder pin causing rocker cam to raise up to starting position, Fig. 879.
4. There should be no binding. Replace if binding exists.

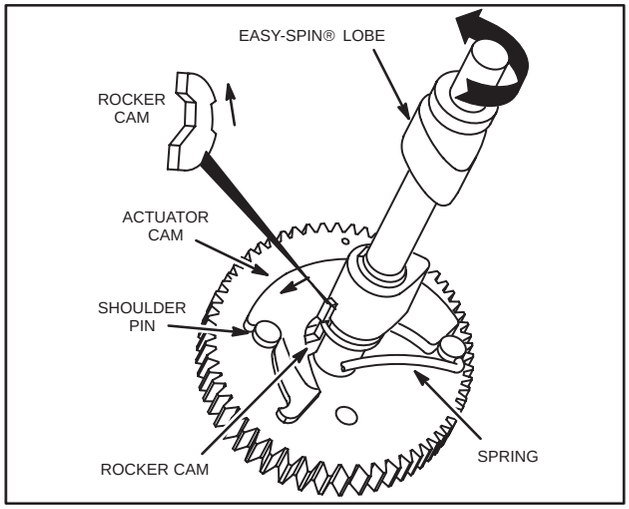

Fig. 879 – START POSITION

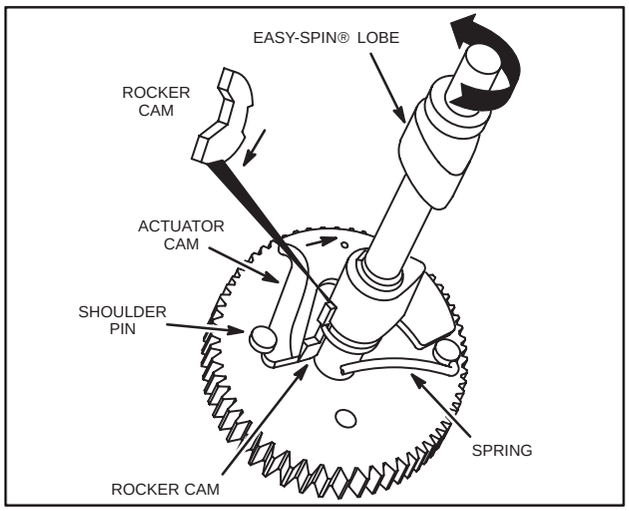

Fig. 878 – RUNNING POSITION

Install Crankshaft And Cam Gear – Cast Iron Cylinders (Except Model Series 300000, 320000)

Install Crankshaft and Cam Gear Plain Bearing

Assemble tappets in cylinder and insert cam gear. Push camshaft into cam hole in cylinder from flywheel side thru cam gear. With a blunt punch and arbor press or hammer, press or drive camshaft until end is flush with outside of cylinder on power take off side of cylinder. Place a small amount of sealer on camshaft plug, when used, and press in plug on flywheel side of cylinder, Fig. 880. Install crankshaft aligning timing marks, Fig's. 881 or 882.

CRANKSHAFT, CAM GEARS (cont'd)

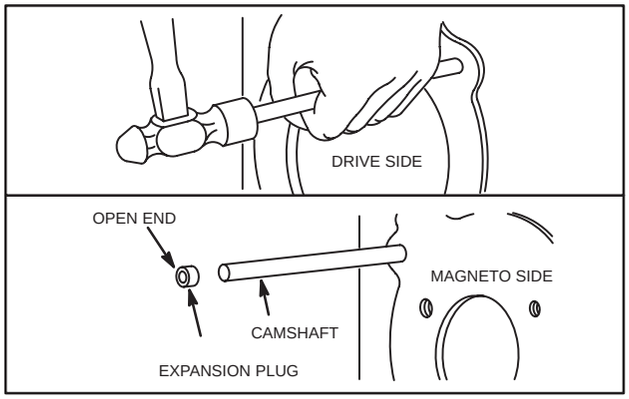

Fig. 880 – INSTALLING CAMSHAFT

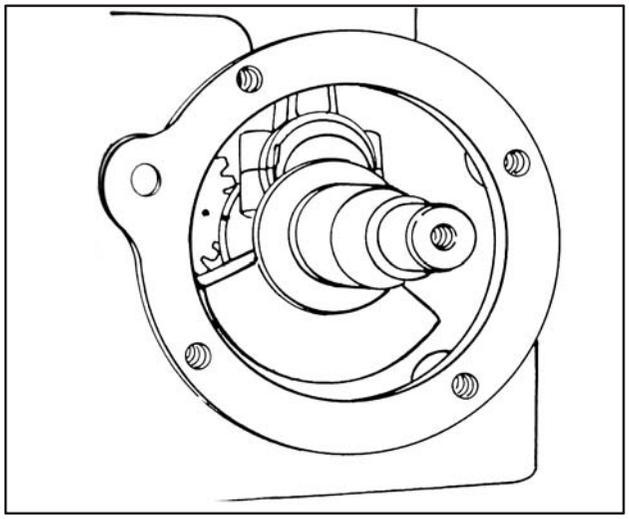

Fig. 881 – TIMING MARKS – MODEL SERIES A, F, H, I, L, M, N, P, S, T, U, WI, WM, 5, 6, 8

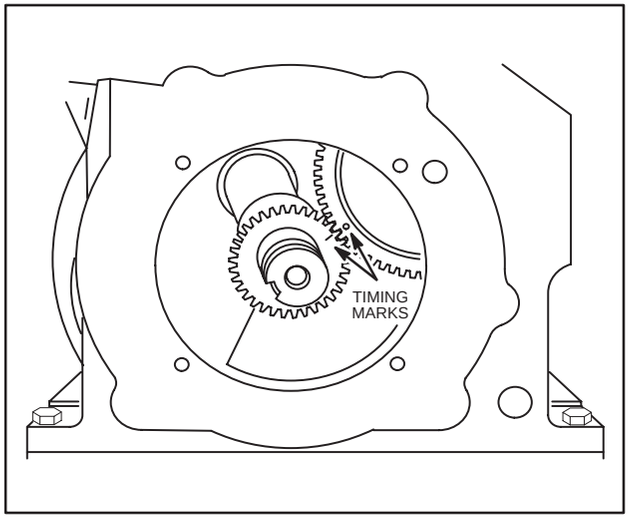

Fig. 882 – TIMING MARKS – MODEL SERIES B, K, Q, R, Z, ZZ, 9, 14, 19, 23, 200000, 230000

NOTE: ON ENGINE MODELS AP, NP, IP, 8FB with ball bearing on crankshaft, the crankshaft must be installed before camshaft is driven in. Place cam gear in recess, insert crankshaft, then pull gear back until gear teeth engage and timing marks match. Then install camshaft.

Model Series D, P, PB

Assemble cam, cam gear and crankshaft. Be sure to assemble the thrust washer between cam and crankcase on camshaft.

Place Timing Tool #MPJ (NLA) between cam and crankpin as shown in Fig. 883. Use a wedge 10" long as shown to hold crankshaft in place. Use Socket Wrench, Tool #13A33-T1* (NLA) and 13A33-T2* (NLA) to tighten the set screw on cam. A piece of 1/8" round cold rolled steel is used as a shear pin between the two (2) ends of the wrenches, and the set screw is tightened until the 1/8" cold rolled steel is sheared off. Allow end play of about .005" on cam before tightening set screw.

* No longer available. If not in tool kit, use 1/2" hexagon socket and T-handle.

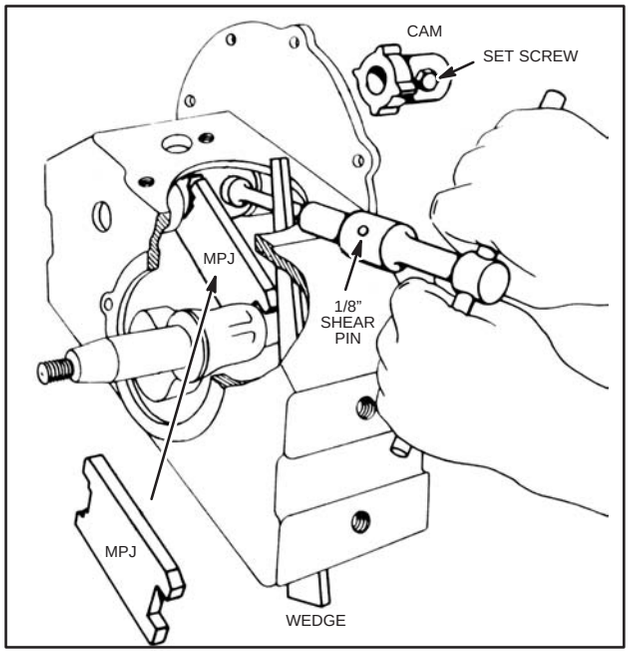

Fig. 883 – ASSEMBLE CAM GEAR, MODEL PB

CRANKSHAFT, CAM GEARS (cont'd)

Install Crankshaft and Cam Gear, Model Series 300000, 320000

1. Install breaker plunger (when used) and tappets.
2. Insert cam gear from power take-off side of cylinder, Fig. 884.

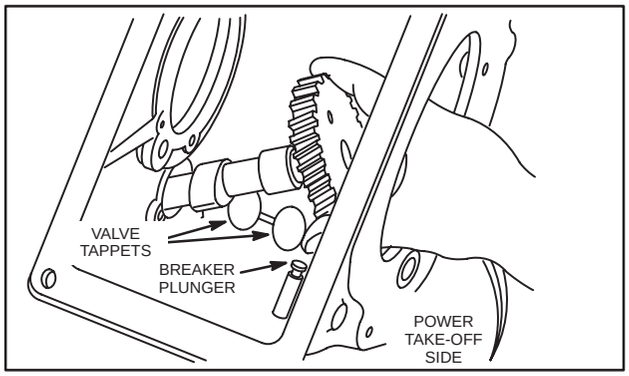

Fig. 884 – INSERTING CAM GEAR

3. Slide cam gear shaft thru power take-off bearing side and into cam gear, Fig. 885.

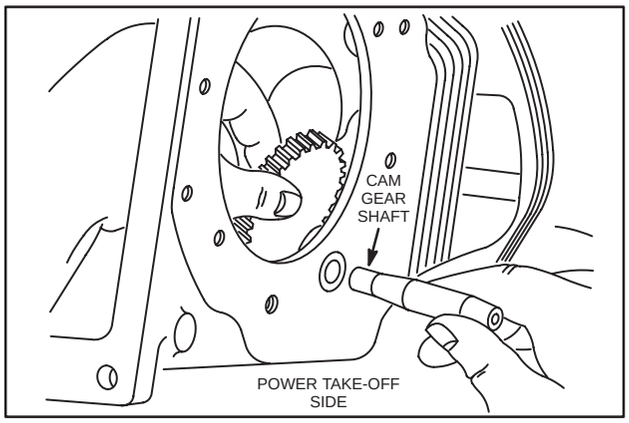

Fig. 885 – INSTALLING CAMSHAFT

4. Install magneto side cam gear bearing on cylinder.
5. Torque bearing screws to 90 in. lbs. (10.2 Nm).
6. Install long cam gear bolt 5–1/2" (140.00 mm) finger tight to prevent loss of camshaft, Fig. 886.

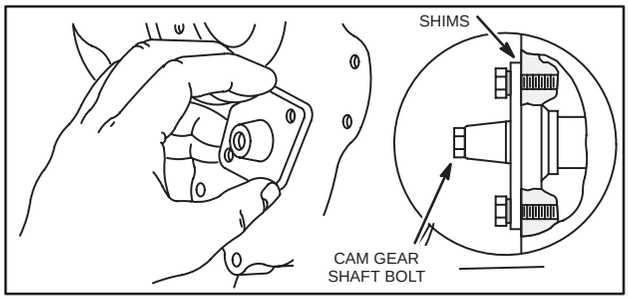

Fig. 886 – INSTALLING CAM GEAR BEARING

Check Cam Gear End Play

Cam gear end play is machined at the factory and requires no adjustment unless magneto side cam bearing or cam gear is replaced. End play is .002" (.05 mm) .008" (.20 mm).

1. Push cam gear against magneto side of cylinder and insert feeler gauge between cam gear and power take-off side of cylinder to check end play.
2. If end play is more than .008" (.20 mm), use service bearing assembly Kit #299706. Kit contains a new bearing and shims, .005" (.13 mm), .007" (.18 mm), and .009" (.23 mm) thick to adjust end play. Install new bearing without shims and measure end play. If .002" (.05 mm) or less, add shims to obtain proper end play.
3. Torque bearing screws to 90 in. lbs. (10.2 Nm).

Install Crankshaft Model Series 300000, 320000

Timing mark is a notch on crankshaft throw directly in line with gear tooth that will engage cam gear at timing mark on cam gear.

1. Mark top of tooth with chalk or crayon.
2. With timing marks aligned, install crankshaft. Use care when installing crankshaft not to damage crankpin, Fig. 887.

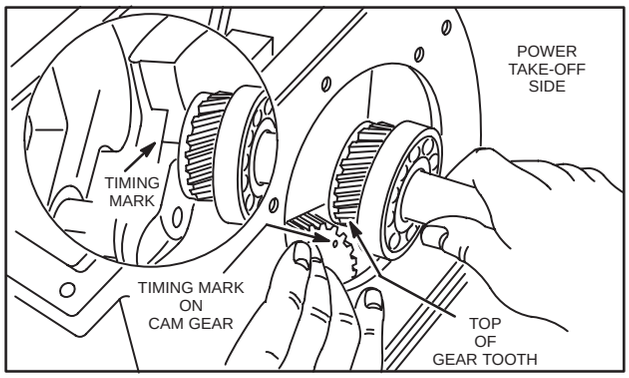

Fig. 887 – TIMING CRANKSHAFT

CRANKSHAFT, CAM GEARS (cont'd)

Aluminum Cylinders – Plain Bearing

Install tappets first. Turn crankshaft until timing mark is facing carburetor side of cylinder. Install cam gear and align timing marks, Fig. 888.

NOTE: Many Model Series have a removable timing gear. Install timing gear with inner chamfer toward crank pin. This assures the timing mark will be visible, Fig. 888.

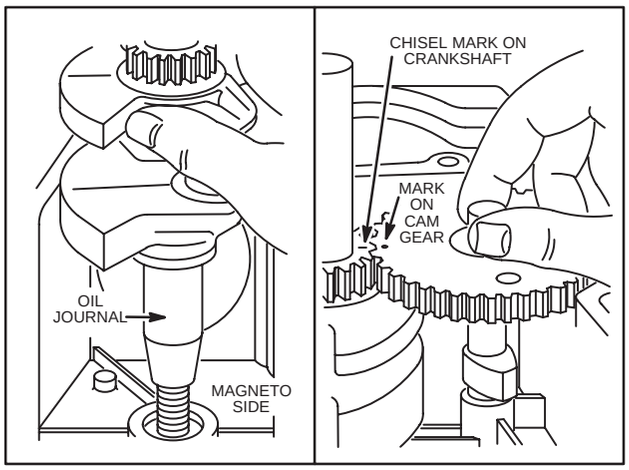

Fig. 888 – ALIGNING TIMING MARKS

Aluminum Cylinders – Ball Bearing

Install tappets. On crankshaft with ball bearings, the gear teeth are not visible. The timing mark is on the crankshaft counterweight. Use seal protector from Tool #19334 or #19356. Table No. 56, when installing crankshaft. Install both crankshaft and cam gear together, with timing marks aligned, Fig. 889.

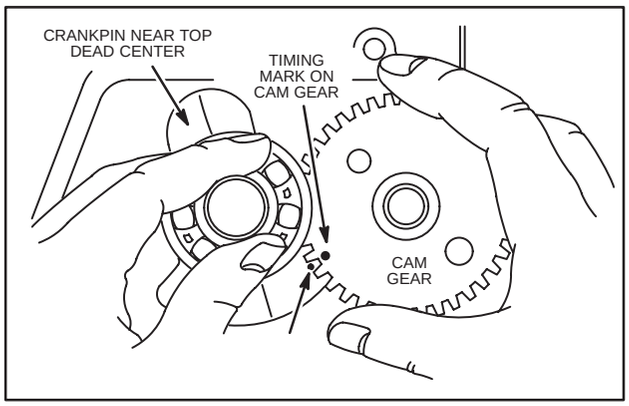

Fig. 889 – BALL BEARING ENGINES

To Install Bearing Supports – Cast Iron Model Series 9, 14, 19, 23, 190000, 20000, 230000, 240000, 3000000, 320000

Use seal protector from Tool #19334 or #19356. Table No. 56, when installing crankshaft. Install bearing supports with new gaskets. Torque power take off cover to 190 in. lbs. and magneto support to 90 in. lbs., Fig. 890.

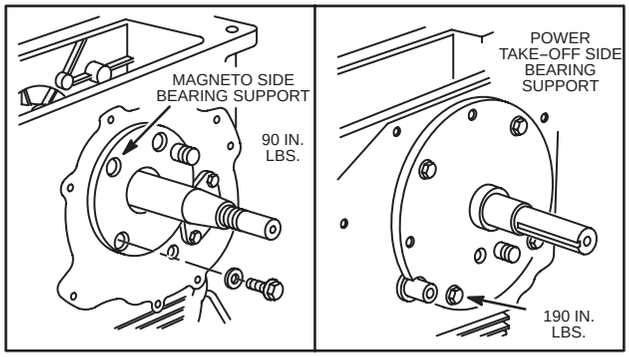

Fig. 890 – INSTALLING BEARING SUPPORTS

Alternate Method to Install Bearing Supports

Use a piece of shim stock as shown in Fig. 891 to prevent damage to oil seal or see Page 6, Section 8, "To Protect Oil Seal." For full instructions on timing see Chapter 4. There should always be a small amount of back lash between cam gear and crankshaft.

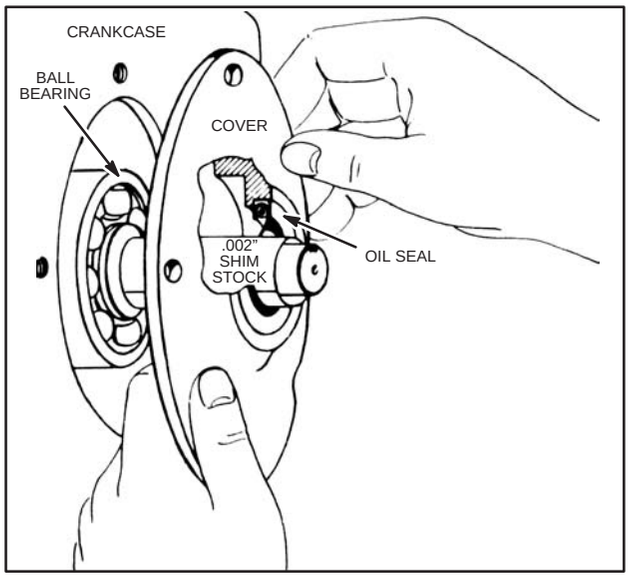

Fig. 891 – PROTECTING OIL SEAL

CRANKSHAFT, CAM GEARS (cont'd)

To Install Crankcase Cover or Sump – All Aluminum Model Series

Use seal protector from Tool #19334 or #19356, Table No. 56, to protect oil seal when installing crankcase cover or sump. DO NOT FORCE COVER OR SUMP. Make sure mechanical governor gear is engaged with cam gear.

Table No. 56
SEAL PROTECTORS

TOOL #	COLOR	CRANKSHAFT JOURNAL SIZE
19334/1	White	.787
19334/2	Red	.875
19334/3	Blue	.984
19334/4	Orange	1.000
19334/5	Brown	1.062
19334/6	Green	1.181
19334/7	Yellow	1.378

Torque Crankcase Cover or Sump – All Aluminum Model Series

Torque crankcase cover or sump to specifications listed in Table No. 57.

Table No. 57
CRANKCASE COVER OR SUMP TORQUE

MODEL SERIES	TORQUE In. Lbs.
60000, 80000, 90000	85
100200, 100900	120
110000	85
130000	120
140000, 170000, 190000, 220000, 250000	140

Crankshaft End Play – All Model Series

Crankshaft end play is .002"-.008" on all models except Model Series 92500, 92900 with code numbers having "5" as the next to last digit (example, 88042151). Procedures for adjusting end play vary between cast iron cylinders, aluminum cylinders, plain and ball bearing models.

To Correct Warped Magneto Plates

The magneto plate sometimes becomes warped and allows oil to leak at the mounting face. Mount the magneto in lathe as shown in Fig. 892 and turn the mounting face flat BEFORE correcting end play. This should be done whenever possible.

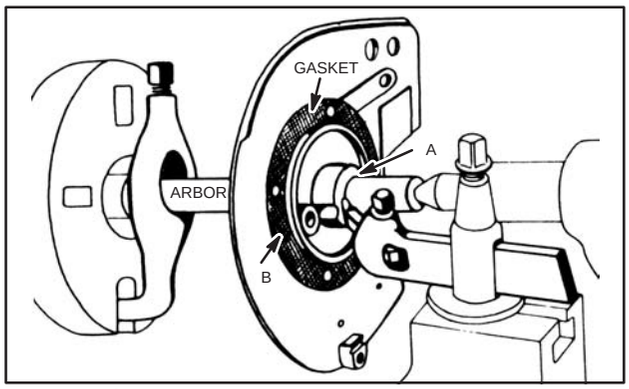

Fig. 892 – CORRECTING END PLAY

To Check Crankshaft End Play

Method #1

End play on all models is .002"-.008" cold. Check after crankshaft is installed. To check end play on an engine with magneto assembled but base removed, push crankshaft toward drive side and insert feeler gauge between thrust face of magneto and crankshaft as shown in Fig. 893.

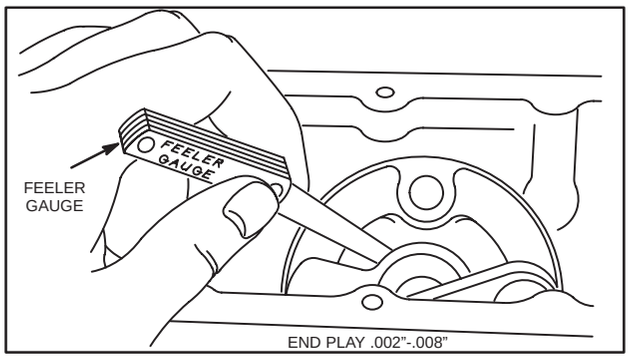

Fig. 893 – CHECKING CRANKSHAFT END PLAY

CRANKSHAFT, CAM GEARS (cont'd)

Method #2

The end play may also be determined with the use of a dial indicator as shown in Fig. 894. In this case, the engine should be firmly anchored so amount shown on dial is the true end play and does not include movement of the complete engine.

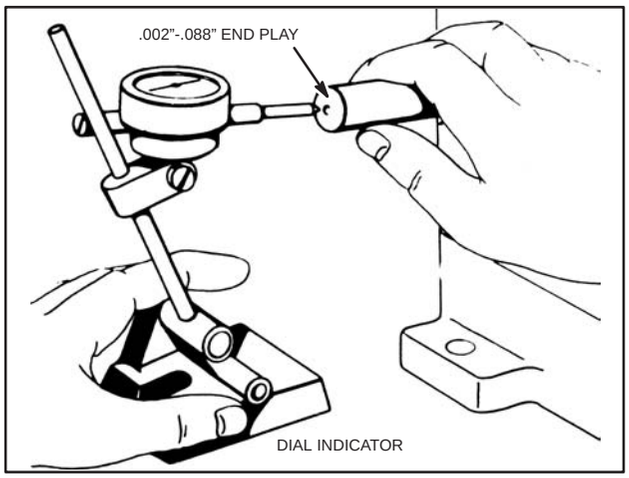

Fig. 894 – CHECKING END PLAY

Method #3

A third method of checking end play is as follows: Push crankshaft toward drive side as far as it will go. Place End Play Gauge, Tool #19112 (NLA) or 19154 (NLA), with SHORT legs of cross bar against machined surface of crankcase (See Tool List Chapter 12 for correct gauge for each model.) Push pin against thrust face of crankshaft and tighten set screw, Fig. 895. Be sure crankshaft is centered and held firmly against drive side.

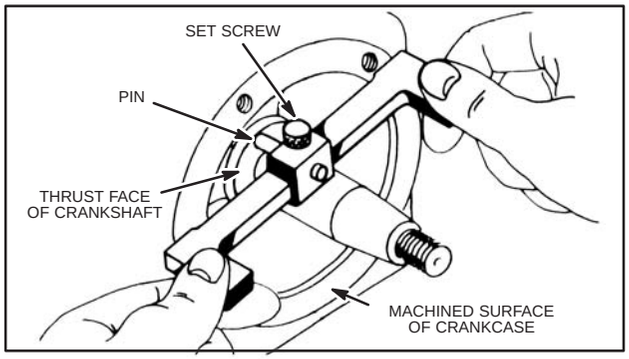

Fig. 895 – SET END PLAY GAUGE

Lay magneto with thrust face up. Put a standard .015" magneto gasket in place. Place end play gauge on magneto with long legs of crossbar against gasket on machined mounting face of magneto, Fig. 896. If end play is correct, the gauge will touch all three (3) points. If there is not enough end play, the pin will touch thrust face and there will be clearance at the leg of the crossbar. If end play is too great, the clearance will be at the pin.

Check frequently with end play gauge, holding gasket in place. When gauge touches evenly at pin and both legs of crossbar, the end play is correct, Fig's. 895 and 896.

To Adjust Crankshaft End Play – Cast Iron Cylinders Model Series A, F, H, I, L, M, N, P, S, T, U, WI, WM, 5, 6, 8

Install magneto plate and one .015" thick gasket on cylinder and check end play. Use a .005", .009" or .015" thick gasket to set end play to .002"-.008" end play.

To Adjust Crankshaft End Play Plain and Ball Bearing – Cast Iron Model Series B, K, Q, R, Z, ZZ, 9, 14, 19, 23, 190000, 200000, 230000, 240000, 300000, 320000

With one .020" thick gasket and magneto bearing support in place, crankshaft end play should be .002"-.008". If end play is less than .002," additional gaskets (.005", .009" or .020" in various combinations) can be used to get the correct end play.

If end play is more than .008", use one .005" or one .009" thick gasket to obtain .002"-.008", Fig. 893.

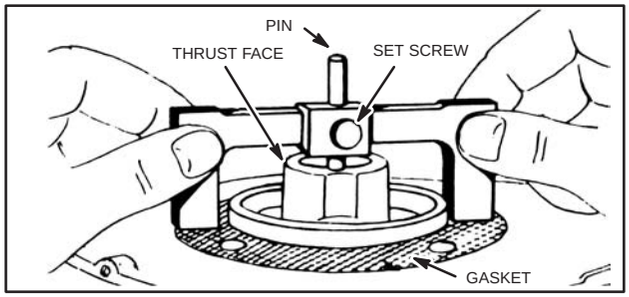

Fig. 896 – CHECKING END PLAY

To Adjust End Play – Cast Iron Model Series

The magneto mounting or bearing support gaskets are supplied in three thicknesses – .005", .009" and .015" or .020", The proper end play can be obtained by using one or more of these gaskets. If a lathe is available, the end play can be corrected by setting the end play gauge (Method #3) as explained, then mount the magneto plate in the lathe as shown in Fig. 892. See Chapter 12 and Tool List for arbor number. If end play is too small, set cutting tool at thrust face, Point A. If end play is too great, set cutting tool at mounting face, Point B.

CRANKSHAFT, CAM GEARS (cont'd)

To Adjust Crankshaft End Play Aluminum Cylinders – Plain Bearings

When crankcase cover or sump is installed with a .015" thick gasket, end play should be .002"-.008" except Model Series 92500, 92900 with "5" as second to last digit of code number.

If end play is less than stated above, use additional gaskets, .005", .009" or .015" in various combinations to get proper end play, Fig. 897.

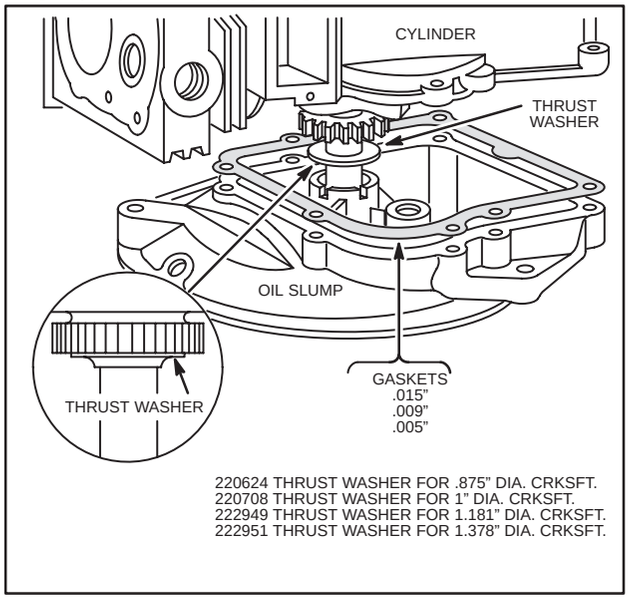

Fig. 897 – ADJUSTING CRANKSHAFT END PLAY

If end play is more than .008" with one .015" thick gasket or more than .030" with one .015" thick gasket on Model Series 92500, 92900 with "5" as next to last digit of code number, a thrust washer is available that can be used on the power take off end of the crankshaft, with additional .005", .009" or .015" gasket to reduce end play to proper end play, Fig. 897.

To Adjust Crankshaft End Play Aluminum Cylinders – Ball Bearings

End play is adjusted the same way as on plain bearing engines. If thrust washer is required, it is used on the magneto end of the crankshaft.

NOTE: Thrust washers cannot be used on engine with two ball bearings. Replace worn parts.

Section 9
CYLINDERS

Cylinder Inspection

Always inspect the cylinder after the engine has been disassembled. Visual inspection will show if there are any cracks, stripped bolt holes, broken fins or if the cylinder wall is damaged. Use a telescoping gauge and dial caliper or inside micrometer to determine the size of the cylinder bore. Measure at right angles at top, center, and bottom or ring travel, Fig. 818. Table No. 5 lists the standard cylinder bore sizes.

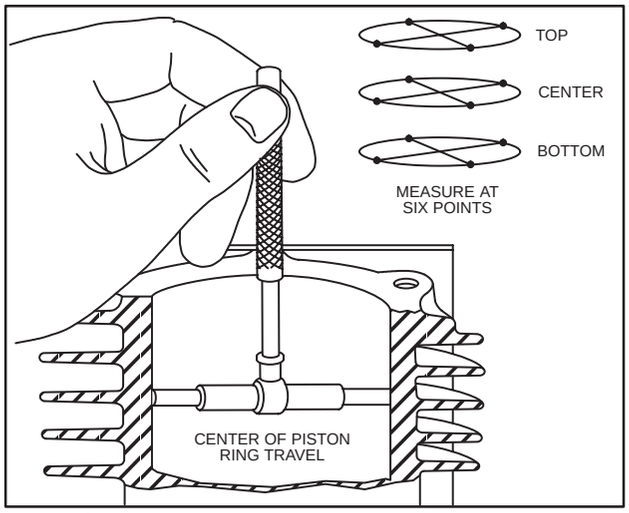

Fig. 818 – CHECKING CYLINDER BORE

NOTE: When installing new piston rings in a cylinder bore that is within specification shown, the cylinder bore should be reconditioned. The proper cylinder cross hatch ensures proper lubrication and piston ring rotation. See "Cylinder Finish," Page 3.

NOTE: Chrome ring sets are available for most models. See Bulletin #479 or Illustrated Parts List. They are used to control oil consumption in bores worn up to .005" over standard and do not require re-honing the bore to seat.

If the cylinder bore is more than .003" oversize or .0015" or more out of round, or both, it must be resized.

Table No. 5

MODEL SERIES	STANDARD BORE SIZE DIAMETER	
ALUMINUM CYLINDER	**MAX. INCHES**	**MIN. INCHES**
6B, 60000 before Ser. #5810030	2.3125	2.3115
6B, 60000 after Ser. #5810030	2.3750	2.3740
80000	2.3750	2.3740
90000	2.5625	2.5615
100200, 100900	2.5000	2.4990
110000	2.7812	2.7802
120000	2.6885	2.6875
130000	2.5625	2.5615
140000	2.7500	2.7490
170000, 190000	3.0000	2.9990
220000, 250000	3.4375	3.4365
CAST IRON CYLINDER	**MAX. INCHES**	**MIN. INCHES**
A	2.2500	2.2490
B	2.6250	2.2490
F	2.2500	2.2490
FE	2.2500	2.2490
FG, FI	2.2500	2.2490
FH	2.2500	2.2490
FJ	2.2505	2.2500
H	2.2500	2.2490
I	2.0000	1.9990
K	2.7505	2.7500
L	2.2500	2.2490
M	2.2500	2.2490
N	2.0000	1.9990
NS	2.0000	1.9990
PB*	2.5005	2.5000
Q	2.7505	2.7500
R	2.7505	2.7500
S	2.2500	2.2490
T	2.2500	2.2490
U	2.0000	1.9990
W	2.7505	2.7500
WI	2.0000	1.9990
WM	2.0000	1.9990

CYLINDERS (cont'd)

Table No. 5, cont'd

MODEL SERIES	STANDARD BORE SIZE DIAMETER	
CAST IRON CYLINDER	MAX. INCHES	MIN. INCHES
WMB	2.0000	1.9990
WMI	2.0000	1.9990
Y	2.2500	2.2490
Z	3.0000	2.9995
ZZ	3.0000	2.9950
5	2.0000	1.9990
6	2.0000	1.9990
8	2.2500	2.2490
9	2.2500	2.2490
14	2.6250	2.6240
19, 23, 190000, 200000	3.0000	2.9990
230000	3.0000	2.9990
240000	3.0625	3.0615
300000	3.4375	3.4365
320000	3.5625	3.5615

Cylinder Resizing

ALWAYS RESIZE TO EXACTLY .010", .020" or .030" OVER STANDARD BORE SIZE AS SHOWN IN Table No. 5. If this is done accurately, the stock oversize piston and rings will fit correctly and proper clearances will be maintained. Cylinders, either cast iron or aluminum, can be accurately resized with hone sets listed in Table No. 6.

Use stones and lubrication recommended by hone manufacturers for various cylinder bores to obtain proper cylinder wall finish.

To Set Up For Honing

Clean cylinder at top and bottom to remove burrs and pieces of base and head gaskets.

Fasten cylinder to a heavy iron bracket or use honing plate, Fig. 819. Some cylinders require shims. Use a level to align drill press spindle with bore.

Oil surface of drill press table liberally. Set plate and cylinder on drill press table. (Do not anchor to drill press table.) If using portable drill, set plate and cylinder on floor. Place hone drive shaft in chuck of drill or portable drill.

Slip hone into cylinder, Fig. 819, Ill. 2. Connect drive shaft to hone and set stop on drill press so hone can only extend 3/4" to 1" from top or bottom of cylinder. If using a portable drill, cut a wood block to place inside of cylinder as a stop.

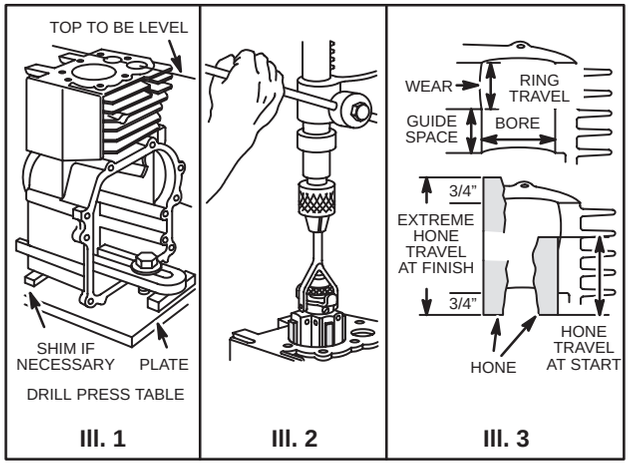

Fig. 819 – HONING CYLINDER
(SEE PAGE 3 FOR ENLARGED DRAWING.)

To Hone Cylinder

Place hone in middle of cylinder bore. Tighten adjusting knob with finger or small screwdriver until stones fit snugly against cylinder wall. DO NOT FORCE. Hone should operate at 300 to 700 RPM. Lubricate hone as recommended by manufacturer.

Connect drive shaft to hone. Be sure that cylinder and hone are centered and aligned with drive shaft and drill spindle. Start drill and, as hone spins, move it up and down at lower end of cylinder. Fig. 819, Ill. 3. The cylinder is not worn at the bottom but is round so it will guide the hone to straighten cylinder bore. As the bottom of the cylinder increases diameter, gradually increase strokes until hone travels full length of bore. Do not extend hone more than 3/4" to 1" at either end of cylinder bore.

If a boring bar is used, a hone must be used after the boring operation to produce the proper cylinder wall finish.

Honing can be done with a portable electric drill, but it is easier to use a drill press.

Cylinder Welding

Always remember that welding creates extreme localized heat which may cause warping, distortion, misalignment, cracking, or breaking.

CYLINDERS (cont'd)

Table No. 6
CYLINDER HONES

HONE SET #	BORE MATERIAL	BORE SIZE	STONE SET #	CARRIER SET #
19205	Aluminum	1-7/8 to 2-3/4"	19206	19205
19205	Aluminum	2-5/8 to 3-1/2"	19207	19205
–	Cast Iron	1-7/8 to 2-3/4"	19303 (60 grit)	19205
–	Cast Iron	1-7/8 to 2-3/4"	19304 (220 grit)	19205
19211	Cast Iron	2-1/2 to 3-5/16" 2-1/2 to 3-5/16"	19212 (60 grit) 19213 (220 grit)	19214 19214
19211	Cast Iron	3-5/16 to 4-1/8" 3-5/16 to 4-1/8"	19212 (60 grit) 19213 (220 grit)	19215 19215

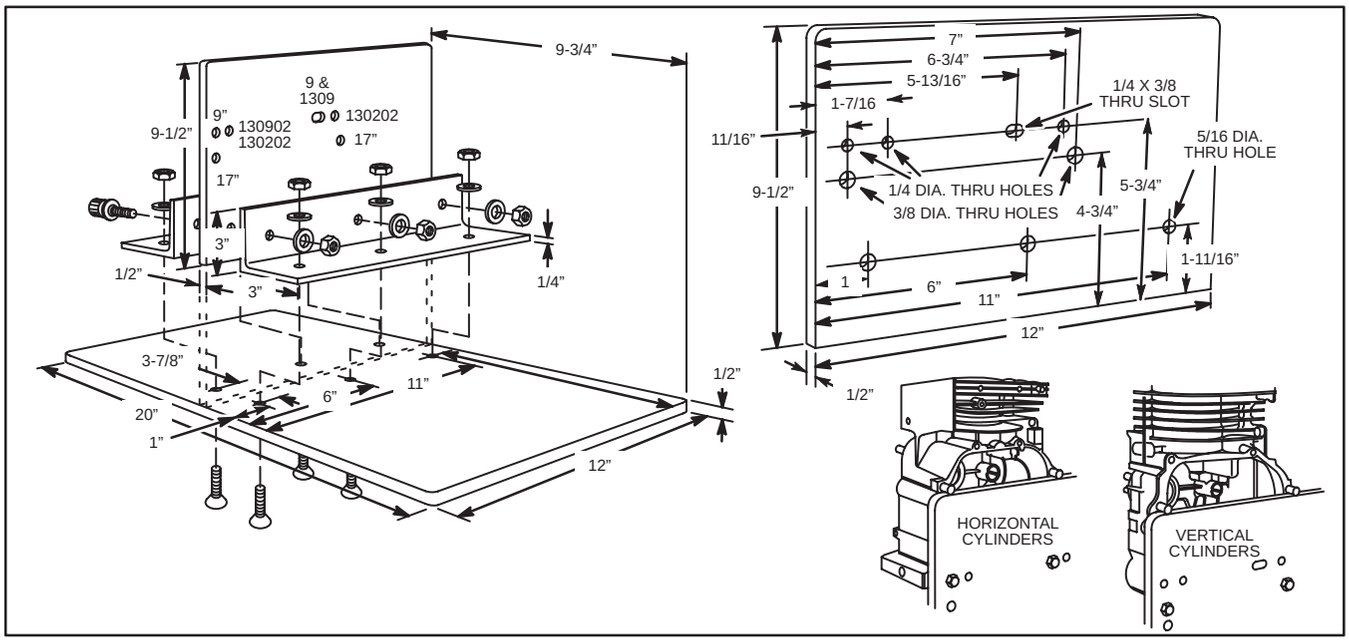

Fig. 819 (CONT'D.)

As cutting tension decreases, stop hone and tighten adjusting knob. Check cylinder bore frequently with an accurate micrometer. Hone about .0005" larger to allow for shrinkage when cylinder cools.

On cast iron cylinders, change from rough stones to finishing stones when within .0015" of desired size. Then use finishing stones.

ALWAYS HONE .010", .020" OR .030" ABOVE THE STANDARD DIMENSIONS GIVEN IN Table No. 5.

Cylinder Finish

The finish on a resized or reconditioned cylinder should have a crosshatch appearance, Fig. 820. Proper stones, lubrication and drill speed along with rapid movement of hone within the cylinder during the last few strokes, will produce this finish. Crosshatching will allow proper lubrication.

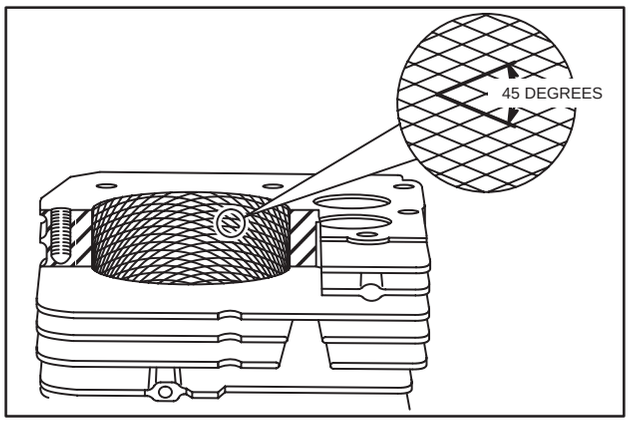

Fig. 820 – CROSS HATCH

CYLINDERS (cont'd)

Cylinder Cleaning

IT IS MOST IMPORTANT THAT THE ENTIRE CYLINDER AND CRANKCASE BE THOROUGHLY CLEANED AFTER HONING.

First wash the cylinder and crankcase carefully in a solvent such as kerosene or commercial solvent. Then thoroughly wash cylinder and crankcase using a stiff brush with soap and hot water. Clean until all traces of honing grit are gone.

HONING GRIT IS HIGHLY ABRASIVE AND WILL CAUSE RAPID WEAR TO ALL OF THE INTERNAL COMPONENTS OF THE ENGINE UNLESS IT IS COMPLETELY REMOVED.

Table No. 7
SEAL PROTECTORS

TOOL #	COLOR	CRANKSHAFT JOURNAL SIZE
19334/1	White	.787
19334/2	Red	.875
19334/3	Blue	.984
19334/4	Orange	1.000
19334/5	Brown	1.062
19334/6	Green	1.181
19334/7	Yellow	1.378
19356/8	Purple	1.317
19356/9	Black	1.503

REPLACE OIL SEAL

The oil seal is assembled with the sharp edge of the leather or rubber toward the inside of the engine. Lubricate inside diameter of oil seals with "Lubriplate" or engine oil, before assembling engines.

Most oil seals are pressed in, flush with the hub. However, Models 60000, 80000, 100000 and 130000 using a ball bearing with mounting flange have the seal pressed 3/16" below crankcase mounting flange, Fig. 821.

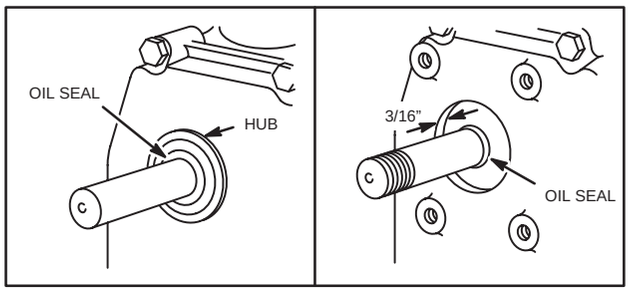

Fig. 821 – REPLACING OIL SEAL

Section 10
BEARINGS

CAST IRON CYLINDERS (PLAIN BEARINGS)

The main bearings consist of the magneto bearing and the PTO bearing. The magneto bearing is a bushing pressed into the magneto plate and reamed to size. The PTO bearing may either be a bushing or a ball bearing and may be mounted either in the crankcase or on a removable plate called the bearing support. The bushing type of bearing is very efficient but extreme care must be taken to maintain the proper clearance between the crankshaft journal and the bearing surface. Too little clearance will cut off the oil supply and too much will cause excessive vibration and wear. If both main bearings and crankshaft journals are within proper limits, this clearance will be maintained.

Table No. 9
TOOLS FOR REAMING MAIN BEARINGS – CAST IRON CYLINDERS

ENGINE MODEL	MAGNETO BEARING				PTO BEARING				LINE REAMER TO FIT MAGNETO & PTO BEARING
	GAUGE TO CHECK MAGNETO BEARING	DRIVER TO REPLACE MAGNETO BEARING	GUIDE BUSHING TO FIT PTO BEARING	REAMER TO FIT MAGNETO BEARING	GAUGE TO CHECK PTO BEARING	DRIVER TO REPLACE PTO BEARING	GUIDE BUSHING TO FIT MAGNETO BEARING	REAMER TO FIT PTO BEARING	
A	19093†	19152†	19088†	19083†	19091†	19120†	19082†	19089†	
AP	19093†	19152†	19090†	19083†	BB	BB	BB	BB	
B	19093†	19152†	19081†	19083†	19092†	19152†	19082†	19084†	
BP	19093†	19152†	19086†	19083	BB	BB	BB	BB	
FH	19111†	69093-T1†			19148†	69093-T1†			19149†
FI	19111†	69093-T1†			19148†	69093-T1†			19149†
FJ	19111†	69093-T1†			19148†	69093-T1†			19149†
H	19093†	19152†	19088†	19083†	19091†	19120†	19082†	19089†	
I	*19098†	19124	19097	19095	19098†	19124	19094	19095	
IBP	19098†	19124	19097	19095	BB	BB	BB	BB	
K	19093†	19152†	19081†	19093†	19092†	19152†	60115-T1-14 †	19084†	
L	19111†	69093-T1†			19148†	19124			19149†
M	19111†	69093-T1†			19148†	19124			19149†
N	19098†	19124	19094	19095	19098†	19124	19094	19095	
NP	19098†	19124	19094	19095	BB	BB	BB	BB	
NS	19098†	19124	19094	19095	19098†	19124	19094	19095	
P	19111†	69093-T1†			69265-T2†	19120†			69265-T1†
Q	19111†	69093-T1†			69265-T2†	19120†			69265-T1†
R	19111†	69093-T1†			19092†	29347-T1†			69054-T2†
S	19111†	69093-T1†			19148†	19124†			19149†
T	19111†	69093-T1†			19148†	19124			19149†
U	19098†	19124	19094	19095	19098†	19124	19094	19095	

BEARINGS, (cont'd)

Table No. 9
TOOLS FOR REAMING MAIN BEARINGS – CAST IRON CYLINDERS (CON'T'D.)

ENGINE MODEL	MAGNETO BEARING				PTO BEARING				LINE REAMER TO FIT MAGNETO & PTO BEARING
	GAUGE TO CHECK MAGNETO BEARING	DRIVER TO REPLACE MAGNETO BEARING	GUIDE BUSHING TO FIT PTO BEARING	REAMER TO FIT MAGNETO BEARING	GAUGE TO CHECK PTO BEARING	DRIVER TO REPLACE PTO BEARING	GUIDE BUSHING TO FIT MAGNETO BEARING	REAMER TO FIT PTO BEARING	
W	19111†	69093-T1†			19092†	29347-T1†			69054-T2†
WI	19098†	19124	19094	19095	19098†	19124	19094	19095	
WM	19098†	19124	19094	19095	19098†	19124	19094	19095	
WMB	19098†	19124	19094	19095	19098†	19124	19094	19095	
WMI	19098†	19124	19094	19095	19098†	19124	19094	19095	
Y	19093†	19152†	19088†	19083†	19091†	19120†	19082†	19089†	
Z	19093†	19152†	19087†	19083†	BB	BB	BB	BB	
ZZ	19093†	19152†	19087†	19083†	BB	BB	BB	BB	
5	19166	19124	19094	19095	19166	19124	19094	19095	19166
6	19166	19124	19094	19095	19166	19124	19094	19095	19166
8	19166	19124	19094	19095	19166	19124	19094	19095	19166
9	19117†	**Replace Support and Cover**			19117†	**Replace Support and Cover**			19117†
14	19117†				19117†				19117†
19	19117†				19117†				19117†
23	19117†				19117†				19117†
191400	19117†				19117†				19117†
193400	19117†				19117†				19117†
200000	19117†				19117†				19117†

* On Model "I" with ball bearing PTO use same tools and specifications as Model "IBP."

** On Models 9, 14, and 23 when worn beyond Max. replace entire bearing support assembly or crankcase cover.

NOTE: Use 19095 Pilot with 19083, 19084 & 19089 Reamers. Use 19096 Pilot with 19094 & 19095 Reamers.

† Tools marked with this mark are NO LONGER AVAILABLE.

For illustration or information on any tool see Chapter 12.

There are three (3) major steps required in repairing main bearings: (1) Check, (2) Remove and Install and (3) Ream.

To Inspect Bearing

If bearing is scored or babbitt has shifted, the bearing should be removed and a new one (1) installed.

To Check Bearing

Refer to Table No. 9 to determine the proper plug gauge for each bearing. If the "C" or flattened end of plug gauge can be inserted into the bearing at any point, the bearing is worn or out of round and should be replaced, Fig. 902.

The "A" and "B" section of the plug gauge are used to check the bearing after it has been installed and reamed. Section "A" should enter the bearing but Section "B" should not.

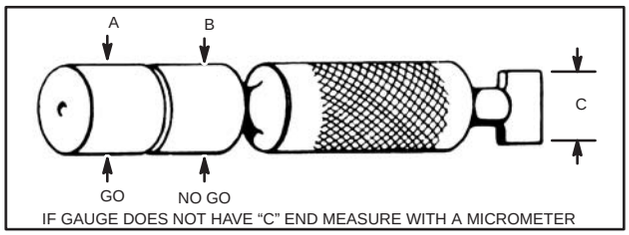

Fig. 902 – BEARING PLUG GAUGE

If no plug gauge is available, measure the bearing diameter and compare with the respective size shown in Table No. 10. If the bearing has a diameter equal to or greater than the given figure, the bearing should be rejected. If bearing is .0007" out of round, it should be rejected. Use plug gauge whenever possible.

BEARINGS, (cont'd)

Table No. 10
MAIN BEARING SIZES

ENGINE MODEL	MAGNETO BEARING		PTO BEARING	
	REPLACE AT OR LARGER	REAM NEW BEARING TO	REPLACE AT OR LARGER	REAM NEW BEARING TO
A, H, Y	1.097	1.096/1.0955	.997	.996/.9955
AHP, AMT, AP	1.097	1.096/1.0955	BB	BB
B	1.097	1.096/1.0955	1.127	1.126/1.1255
BM, BP	1.097	1.096/1.0955	BB	BB
F, FH, FI, FJ, L, M, S, T	.972	.971/.9075	.877	.876/.8755
I, N, NS, U WI, WM, WMB, WMI	.878	.877/.8764	.878	.877/.8764
IBP, NP, IP	.878	.877/.8764	BB	BB
K	1.097	1.096/1.0955	1.127	1.126/1.1255
KM, Z, ZZ	1.097	1.096/1.0955	BB	BB
P	.972	.971/.9075	1.0015	1.0005/1.000
Q, R, W	.972	.971/.9075	1.127	1.126/1.255
5	.878	.877/.8764	.878	.877/.8764
6	.878	.877/.8764	.878	.877/.8764
8	.878	.877/.8764	.878	.877/.8764
9*	.988		.988	
14*	1.1843		1.1843	
19*	1.185		1.185	
23*	1.3813		1.3813	
190000	1.185		1.185	
200000	1.185		1.185	
230000 ♦	1.382		1.382	
300000	Ball		Ball	
320000	Ball		Ball	

Out of round Allowance .0007"

* Models 9, 14, 23 when worn beyond Max. replace entire bearing support assembly.

♦ Gear Reduction PTO – 1.185"

REPLACE BEARINGS

To Replace Magneto Bearing

Select the proper driver to remove and install the bearing, Table No. 9. Proceed as follows: Remove oil seal retainer. Press out old bearings in arbor press using proper driver, Fig. 903.

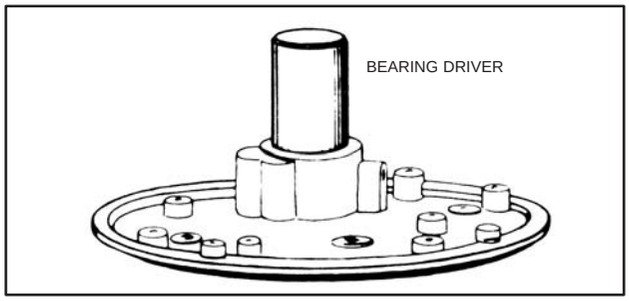

Fig. 903 – BEARING DRIVER

NOTE: Some magneto bearings are held in place with a pin through the plate hub into the bearing. Others are secured by staking. A staked bearing may be identified by a notch or notches in the outer end of the bearing, just inside the oil retainer. These notches are made by driving a portion of the bearing into a short groove in the hub.

PRESS ALL NEW BEARINGS INWARD TO REMOVE. PRESS FROM INSIDE TO INSTALL, Fig. 903.

Press in new bearing. Extreme care must be taken to align the oil holes in the bearing with those in the magneto plate hub. Do not press bearing in too far. The inner end of the bearing should be 1/16" from the inner end of thrust face of the hub (except on flange type bearing), Fig. 904.

NOTE: Whenever a FLANGE bearing has been replaced, the end play of the crankshaft must be checked. See Chapter 6 for full information on end play.

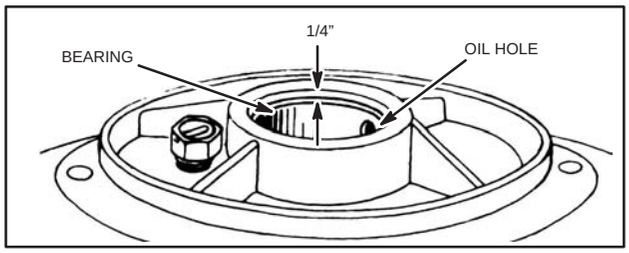

Fig. 904 – ALIGNING BEARING

BEARINGS, (cont'd)

To pin bearing in place, drill a hole through the hub and bearing with a No. 31 drill. On the type of magneto shown in Fig. 905, the hole is drilled in the outer end of hub. On the type of magneto shown in Fig. 907, the hole is drilled in the inner end of the hub. On flange type bearings as shown in Fig. 906, drill the hole anywhere in the thrust face except over the oil hole. Insert brass pin (furnished with bearing) into the hole. Drive it in until the tip just enters the steel shell of the bearing but does not go through the babbitt. Peen outer end of hole. On flange type bearing the pin is driven in flush with thrust face.

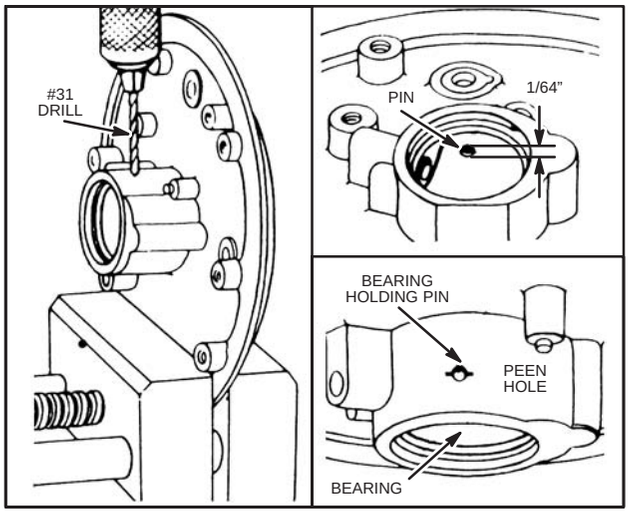

Fig. 905 – PINING BEARING

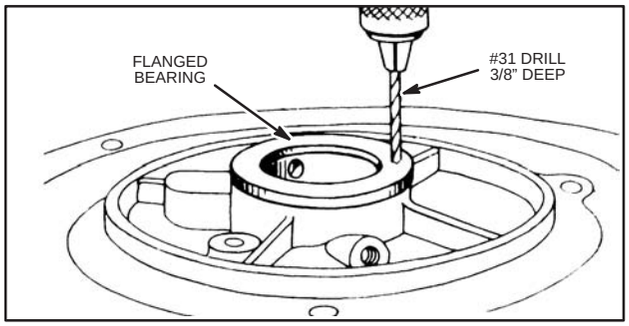

Fig. 906 – PINING FLANGE BEARING

To stake bearing into place, use a dull chisel or screw driver to drive a small portion of the bearing into the grooves in the magneto plate, Fig. 907.

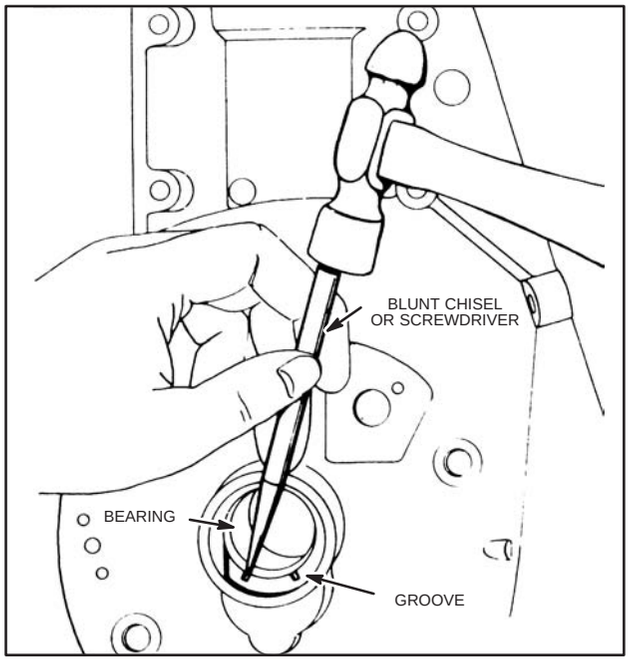

Fig. 907 – STAKING BEARING

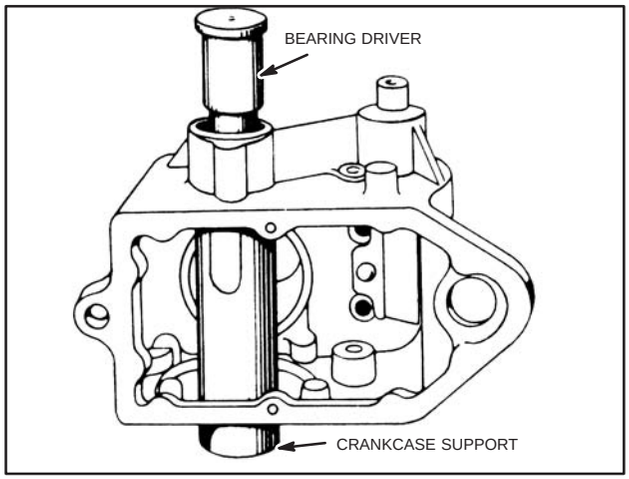

Fig. 908 – REMOVING DRIVE BEARING

To Replace PTO Bearing

The PTO bearing may be removed and replaced the same as the magneto bearing, but be sure to use a crankcase support when pressing bearing in or out, Fig. 909. PTO bearings are pinned in place only on Models FH and FI. On these models the flange bearing is pinned on the inside face as on the magneto flange bearing. The straight bearing is pinned at the outer hub of the crankcase.

BEARINGS, (cont'd)

Horizontal Cylinder Engines

The cylinder bushing on horizontal cylinder engines should be flush with the outer end of the bushing hole. If bushing protrudes too far, it will touch the oil seal and close off the oil retaining groove and cause oil to leak.

To Remove and Install Plain Bearings

Use one bearing as a guide while reaming the other. It is absolutely necessary to completely repair one (1) bearing before starting on the other.

NOTE: If the bushings are worn on Model 9, 14, and 23, the crankcase cover or the bearing support must be replaced with a new one. The bushings are not replaceable.

REAMING

Two (2) types of reamers are used for main bearings as you will note in Table No. 9:

1. The shell reamer – used with a pilot and guide bushing.

2. The line reamer – a solid reamer with two (2) sets of cutting edges called flutes. One set of flutes acts as a guide while the other set is cutting. Never try to ream both bearings at the same time.

NOTE: Reamer lubricated with oil will tend to cut a smaller hole than when used dry.

To Use Shell Reamer

After bearing has been installed, assemble magneto to cylinder or crankcase. Refer to Table No. 9 and select proper tools. If "BB" is shown instead of a tool, it indicates that a ball bearing is used on the PTO side. The guide bushing listed will fit in the recess in the crankcase. Insert guide bushing in bearing opposite the the one to be reamed from the inside of the crankcase. Place shell reamer on pilot and thrust it into bearing to be reamed.

The tip of the pilot should enter guide bushing at opposite side, Fig. 909. Turn reamer clockwise with a steady, even pressure until reamer is completely through bearing. Then remove magneto plate and remove reamer without backing it through the bearing.

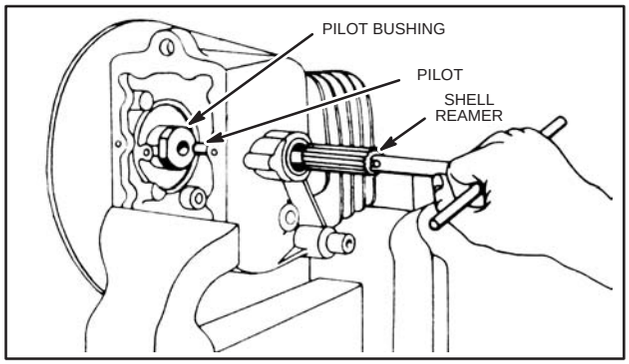

Fig. 909 – REAMING MAGNETO BEARING (SHELL REAMER)

To Use Line Reamer

Mount magneto to crankcase. Select proper reamer, Table No. 9. Insert reamer through larger bearing regardless of which is to be reamed. The smaller set of flutes enters smaller bearing on opposite side of crankcase, Fig. 910. Than turn reamer clockwise with a steady, even pressure until bearing is completely reamed. Continue to turn clockwise while removing it from bearings.

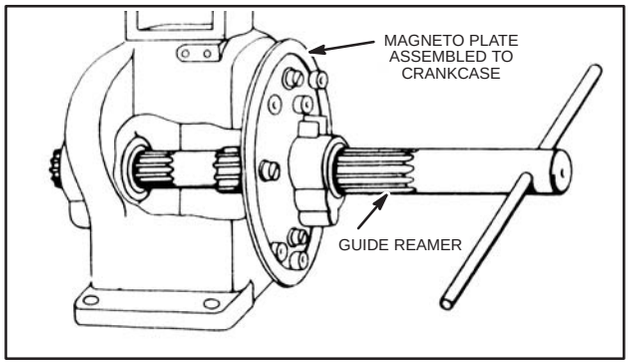

Fig. 910 – REAMING MAGNETO BEARING (LINE REAMING)

To Check Bearing for Size after Reaming

Use the same plug gauge as in inspection, but use "A" and "B" sections, Fig. 902. The "A" section should enter the bearing but "B" section should not. If "B" enters, the bearing is too large. For bearing sizes see Table No. 10. After reaming is completed, remove and clean oil sucker valve and be sure oil return passages are clean and free from chips. Replace oil valves.

Install new oil retainer rings which are included with respective bearings.

BEARINGS, (cont'd)

BEARING OIL RETAINER

The bearing oil retainer rings consist of four (4) types: (1) Flange Type, (2) Cup Type, (3) Washer Type, and (4) Oil Seal, Fig. 911.

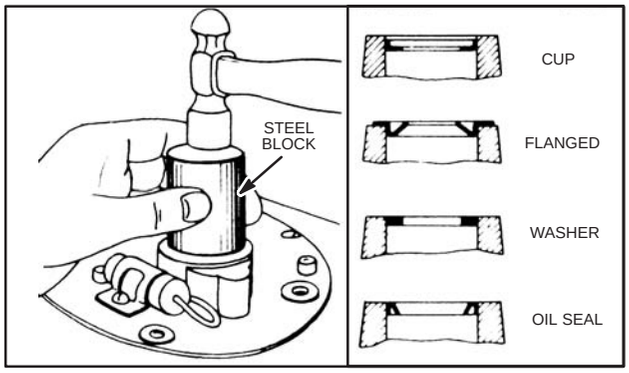

Fig. 911 – BEARING OIL RETAINERS

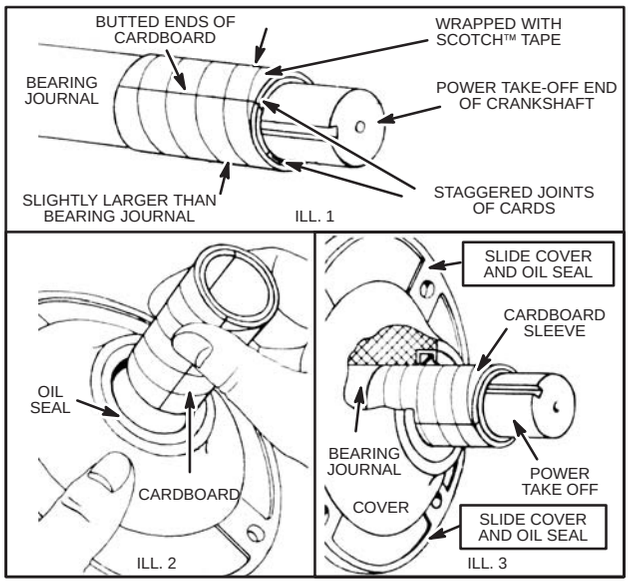

Fig. 912 – PROTECTING OIL SEAL

To Replace Oil Retainer Ring or Oil Seal

To remove, pry out the old retainer ring with a screw driver.

The cup type is assembled with the edges up. The flange type can be assembled only with the flange up. The washer type can be assembled with either side up.

The oil seal is assembled with the sharp edge of the leather or rubber down toward the inside of the engine. Rub leather oil seal with "Lubriplate" or equivalent before assembling. Place the retainer ring in the counterbore and either press or drive it into place. Tool #19156 (NLA) can be used where the retainer ring is driven flush, Fig. 911. There should be be an air gap of .010" between the cup type and the flange type and the crankshaft journal. If not, file the retainer ring. Do not file the washer type.

To Protect Oil Seal while Assembling to Engine

Wrap a piece of cardboard around the power takeoff portion of the crankshaft. The cardboard should be cut to size so that the ends butt and do not overlap. Tape joint with "Scotch™ Tape." Wrap successive layers around each other until a sleeve is built up that is just a few thousands larger than the bearing journal Wrap the last layer with "Scotch™ Tape," Fig. 912.

To assemble the oil seal and crankcase cover, oil the sleeve and place it in the oil seal from the outside of the oil seal, Fig. 912, Ill. 2. Guide the power take-off portion of crankshaft into the sleeve and push the crankcase cover into place. The sleeve will stop when it contacts the bearing journal and will allow the oil seal to slip onto the journal without damage to the seal, Fig. 912, Ill. 3.

Model Series I, N, U, WI, WM, WMB, WMI, 5, 6, 8 Engines

On engines with plain main bearings on the power takeoff side, the oil seal should protrude 1/16" from the cylinder boss, Fig. 913.

On engines with ball bearing type main bearing, the oil seal should be pressed in 3/16" from the face of cylinder boss, Fig. 913.

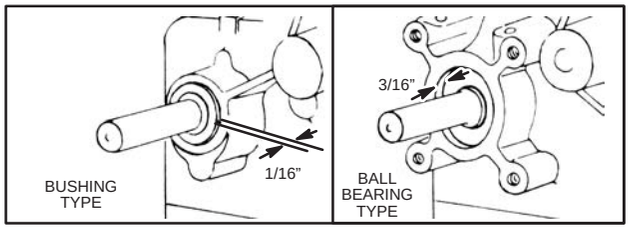

Fig. 913 – OIL SEAL LOCATION

BEARINGS, (cont'd)

Models A, B, K, Z, ZZ

When replacing the oil seal on magneto plates with a raised boss, it is important that the oil seal be properly seated to prevent leaking or turning loose.

First grind a chisel or old screw driver as shown in, Fig. 914, Ill. 1 Then inspect the raised boss as shown in Fig. 914, Ill. 2. There will be two (2) or three (3) places where the boss has been peened or staked in. With the sharp edge of the chisel against the oil seal, drive these back as shown. Then with a sharp pointed scraper, scrape all burrs away until the counterbore is round and smooth, Fig. 914, Ill. 3. this is to permit the new oil seal to be inserted without distortion. Remove the old oil seal with a screw driver.

Drive in the the new oil seal until it stops against the shoulder in the counterbore. A piece of pipe or rod, slightly smaller in diameter than the oil seal, should be be used as a driver. Then use the chisel to stake or peen a portion of the boss in three evenly spaced places, Fig. 914, Ill. 4. This is to prevent the oil seal from working out. Do not stake so deep that the oil seal is distorted.

NOTE: If the magneto plate is so worn that the oil seal is loose in the counterbore, a new magneto plate must be used.

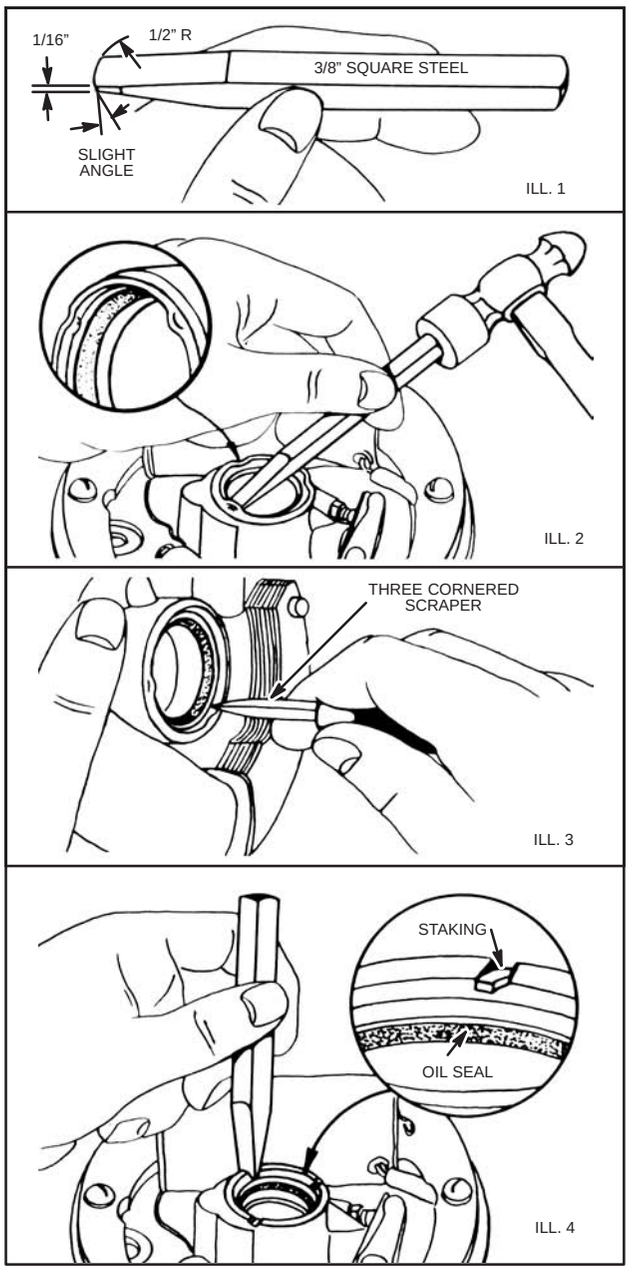

Fig. 914 – REMOVING & REPLACING OIL SEAL

BEARINGS, (cont'd)

CAM GEAR BEARINGS

Model Series D, P, PB

See Chapter 6 on removal of cam gear. The main bearings on Models D, P, PB are replaced as in the preceding instructions, but this model has cam gear bearings which may also be repaired.

Use Plug Gauge, Tool #67029-T2 (NLA) for cam bearing on magneto side, inserting it from drive side as shown in Fig. 915. Use plug Gauge, Tool #69265-T2 (NLA) for both cam and main bearing on drive side. Install new bearing same as main bearing.

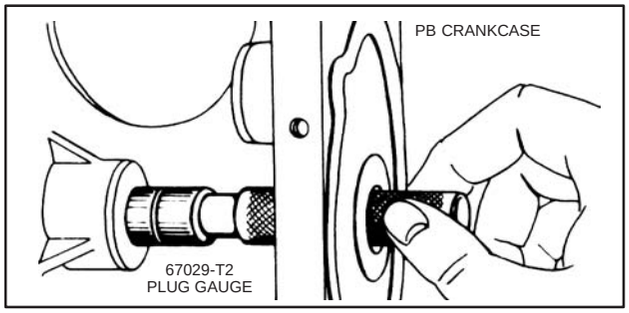

Fig. 915 – GAUGING MODELS D, P, PB CAM BEARING

To ream use fixture No. 13A18-T30. This fixture is necessary in order to maintain the center-to-center distance of the cam and crankshaft gears so they will mesh properly. Put fixture in place, Fig. 916, with short leg inside crankcase. Line it up with the plug through the main bearing. Insert reamer, Tool #67029-T1 (NLA). from drive side and ream until reamer strikes the magneto plate. Then remove fixture and magneto plate and finish reaming.

NOTE: Tool #'s 13A18-T30 (NLA), 67092-T1 (NLA), 69265-T1 (NLA) are no longer available. If you do not have these tools in your kit, the crankcase must be sent to the factory for reaming of cam gear bearings.

CAUTION: Always turn reamer clockwise even when removing it from the bearing. Keep a steady pressure on the reamer to eliminate chatter. Handle reamer with utmost care. The slightest nick on a reamer will ruin any bearing on which it is used.

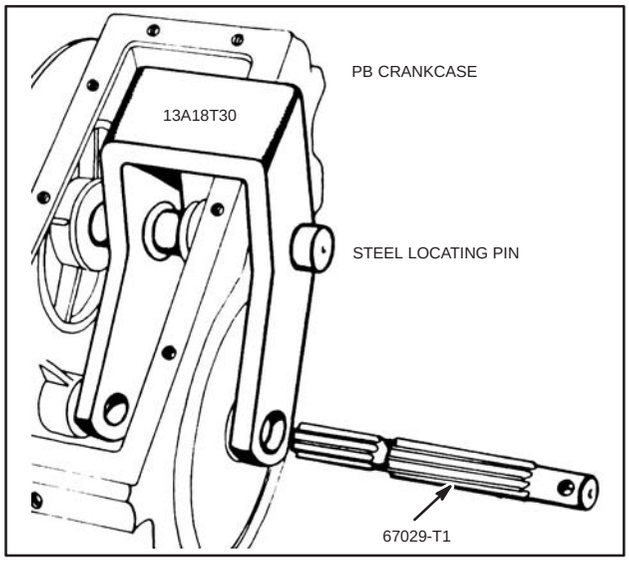

Fig. 916 – REAMING MODELS D, P, PB CAM BEARING

BALL BEARINGS (All Models)

Inspect Ball Bearing

To inspect a ball bearing, rotate the bearing slowly by hand; if any roughness is noted, bearing should be replaced.

To Remove

Ball bearings are a press fit on the crankshaft. If bearing is to be replaced, it should be removed in an arbor press, Fig. 917. (Bearing should not be reused if removed from crankshaft.)

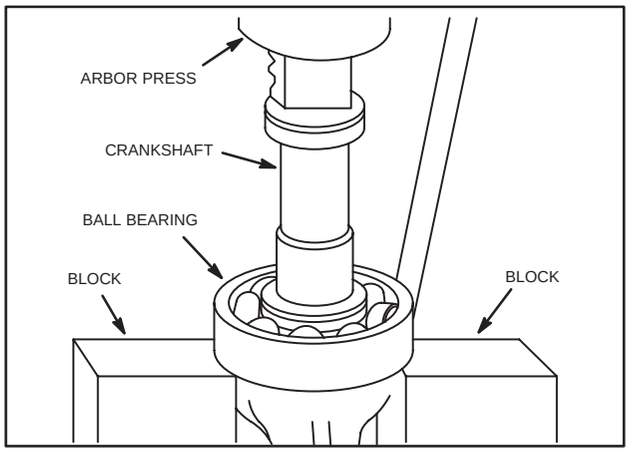

Fig. 917 – REMOVING BALL BEARINGS

BEARINGS, (cont'd)

To Install Ball Bearings

Heat bearing in hot oil (250° F max.); bearing must not rest on the bottom of the pan in which it is heated. Place crankshaft in vise with bearing side up. When bearing is quite hot it will become a slip fit on the crankshaft journal. Grasp bearing with the shield down and thrust it down on the crankshaft, Fig. 918. The bearing will tighten on the shaft while cooling. DO NOT QUENCH.

Wash bearing in a clean solvent. Re-oil with engine oil during assembly.

NOTE: Bearing shield faces crankshaft crankpin.

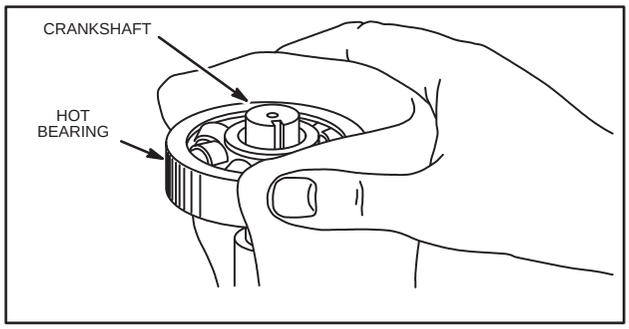

Fig. 918 – INSTALLING BALL BEARING

ALUMINUM CYLINDERS (Plain, DU™, Needle)

To Check Bearings for Wear

Bearings should be replaced if scored or if plug gauge will enter. Try gauge at several locations in bearing, Fig. 919. See gauge listing in Table Nos. 12 or 13. If gauge is not available, refer to Table No. 11 for reject dimensions.

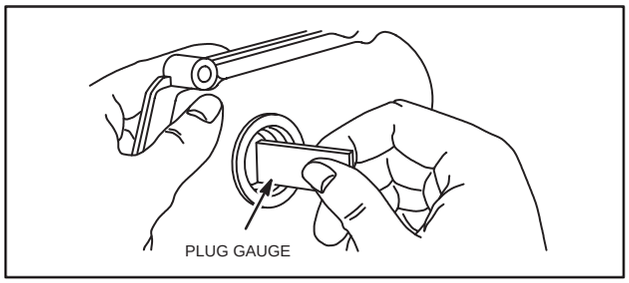

Fig. 919 – CHECKING BEARING

Table No. 11
REJECT DIMENSIONS

MODEL SERIES	MAGNETO BEARING	PTO BEARING
ALUMINUM CYLINDER	INCHES	INCHES
6B, 8B*	.878	.878
60000, 80000*	.878	.878
90000*	.878	.878
100700, 120000	.878	1.065
100200, 100900, 130000	.878	1.003
110000*	.878	.878
170000#, 190000#	1.104#	1.185
220000, 250000, 280000	1.383	1.383

* Auxiliary drive models PTO Bearing Reject Size 1.003"

\# Synchro-Balanced® magneto Bearing Reject Size 1.185"

To Repair Magneto And Sump Or Crankcase Cover Bearings

Most aluminum cylinder engines use the aluminum cylinder material as a bearing. When the bearing is worn beyond reject, as measured by plug gauge listed in Table No. 12 Magneto or Table No. 13 PTO, bearings can be reamed out and rebushed with either a steel backed aluminum or a DU™ bearing. If gauge is not available, refer to Table No. 11 for reject dimensions. Refer to Illustrated Parts List by Model Series and Type Number for part numbers.

Some Model Series engines are built with replaceable DU™ or needle bearing. Use plug gauge listed in Table No. 12 Magneto or Table No. 13 PTO to check DU™ for reject. If gauge is not available, refer to Table No. 11 for reject dimensions.

BEARINGS, (cont'd)

Table No. 12
MAGNETO BEARING REPAIR TOOL CHART

Aluminum Model Series	Cylinder Support	Pilot	Counter-bore Reamer	Reamer Guide Bushing Mag.	Bushing Driver	Pilot Guide Bushing PTO	Finish Reamer	Plug Gauge
6B, 60000, 8B, 80000, 82000, 90000	19123	19096	19099	19101	19124	19094* 19097■	19095*♦	19166
8BHA*, 80590*, 81590*, 80790*, 81790*, 92590*, 92990*, 110900*, 111900*, 112900	19123	19096	19099	19101	19124	∉	19095*♦	19166
100200, 100900, 130000	19123	19096	19099	19101	19124	19168	19195♦	19166
140000, Steel 170000, Backed 190000, Aluminum 192700, Bearing	19227	19096	19172	19170	19179	19169	19173*♦	19178
170000, DU™, 190000, Bearing 192700	19227				19179			19178
171700, Steel Backed 191700, Aluminum Bearing	19227	19096	19174	19201	19179	19169	19175*♦	19178
171700, DU™, 191700, Bearing	19227	19096	19281	19301	19179	19169		19178
220000, 250000	19227	19220●	19224●	19222●	19226●	19220●		19219

♦ Tools for steel backed aluminum bushing, only in positions shown.

∉ Use sump or crankcase cover with 7/8" diameter bearing and 19094 guide.

• Tools for DU™ Bushing only, in positions shown.

* Plain bearing crankcase cover.

■ Ball bearing crankcase cover.

NOTE: Tools listed may be used to install either steel backed aluminum bushing or DU™ bushing except as noted above.

Table No. 13
PTO BEARING REPAIR TOOL CHART

Aluminum Model Series	Cylinder Support	Pilot	Counter-bore Reamer	Reamer Guide Bushing Mag.	Bushing Driver	Pilot Guide Bushing PTO	Finish Reamer	Plug Gauge
6B, 60000, 8B, 80000, 82000, 90000	19123	19096	19099	19100	19124	19094	19095*♦	19166
8BHA*, 80590*, 81590*, 80790*, 81790*, 92590*, 92990*, 110900*, 111900*, 112900	19123	19096	19099	∉	19124	19094	19095*♦	
100200, 100900, 130000	19123	19096	19172	19186V 19170H	19124	19094	19173∉ ♦	19178
140000, 170000, 190000, 192700	19227	19096	19174♦	19171♦	19179	19168	19175♦	19178
171700, 191700	19227	19096	19174♦	19171♦	19179	19169	19175♦	19178
220000, 250000	19227	19220●	19224●	19222●	19226●	19220●		19219

♦ Tools for steel backed aluminum bushing, only in positions shown.

∉ Use sump or crankcase cover with 7/8" diameter bearing and 19094 guide.

• Tools for DU™ Bushing only, in positions shown.

* Plain bearing crankcase cover.

■ Ball bearing crankcase cover.

NOTE: Tools listed may be used to install either steel backed aluminum bushing or DU™ bushing except as noted above.

BEARINGS, (cont'd)

To Repair Worn Aluminum Bearings

Select tools needed to repair bearing from Tables Nos. 12 or 13. Remove and discard oil seal for bearing to be repaired. Place pilot guide bushing in bearing opposite of bearing to be repaired. Have flange of bushing on inside of crankcase.

NOTE: When Pilot, Tool #19066, has been modified by adding a 4" long, 1/2" threaded extension, place pilot guide bushing flange on outside of crankcase, Fig. 920.

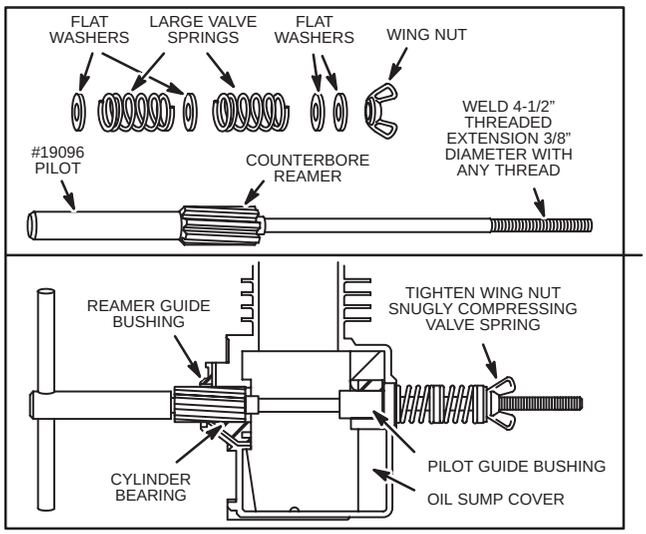

Fig. 920 – MODIFIED PILOT

Place reamer guide bushing in oil seal bore of bearing to be repaired. The reamer guide bushing and pilot guide bushing will center the counterbore reamer, even though both bearings are worn.

Place counterbore reamer on pilot and insert into cylinder until tip of pilot enters pilot guide bushing and counterbore reamer enters reamer guide bushing, Fig's. 920 and 921.

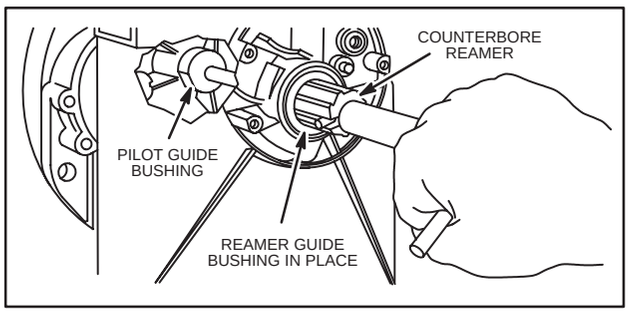

Fig. 921 – COUNTERBORE REAMING

Turn counterbore reamer clockwise with steady pressure until it is completely thru the worn bearing. Lubricate reamer with kerosene or similar solvent lubricant while reaming.

NOTE: Do not counterbore ream without lubricant. Aluminum will build up on reamer flutes causing damage to reamer and result in oversize counterbores.

NOTE: Remove sump or crankcase cover and remove reamer and pilot from crankcase. DO NOT REMOVE REAMER THRU COUNTERBORED BEARING. Remove guide bushings and clean out all chips.

To Install Bushing, Cylinder (Steel Backed Aluminum)

Hold new bushing against cylinder or crankcase cover with notch next to reamed out bearing and in line with notch in cylinder or cover. Note position of split in bushing. With a chisel or screwdriver and hammer, make a notch in reamed out bearing opposite split in bearing, Fig. 922.

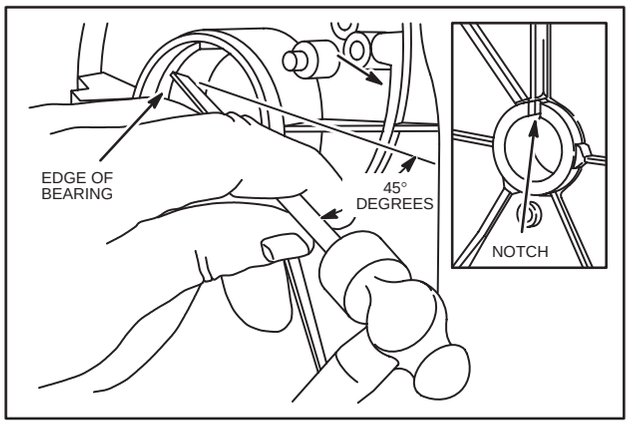

Fig. 922 – NOTCHING CYLINDER OR CRANKCASE COVER

NOTE: On Model Series 171700, 191700, magneto bearing replacement, place bushing against inside of cylinder with notch in line with oil hole in cylinder and against reamed out bearing. Note position of split in bearing. With a chisel or a screwdriver and a hammer, make a notch on inside edge of reamed out bearing opposite split, Fig. 923.

BEARINGS, (cont'd)

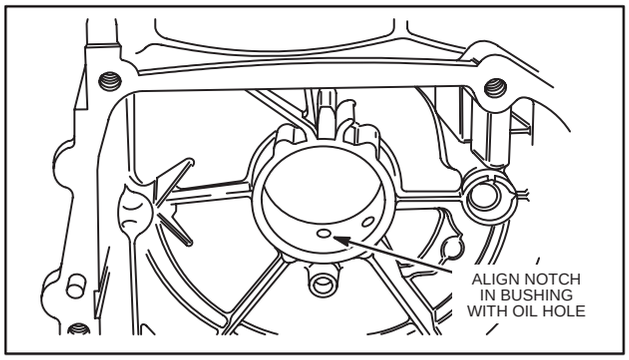

Fig. 923 – LOCATION OF OIL HOLE

Select tools needed from Table No. 4 to press in new bushing. Press in new bushing keeping notch in line with notch in cylinder or crankcase cover until outer edge of new bushing is flush with outer end of reamed out bushing. If notch does not line up, bushing can be pressed into recess of cylinder support and reinstalled.

On Model Series 171700, 191700 magneto bushing notch should be in line with oil hole and oil hole should be open after installation, Fig. 924.

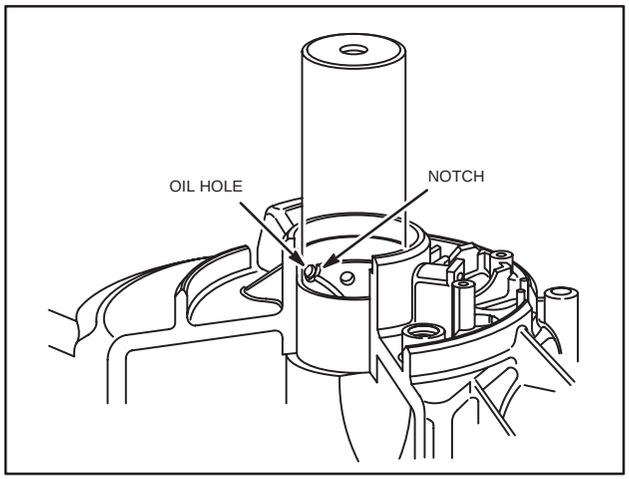

Fig. 924 – INSTALLING BUSHING
MODEL SERIES 171700, 191700

Stake bushing into notch that was made in cylinder before bushing was pressed in. Reassemble cylinder and cover. Then use tools from Table No. 12 to finish ream bushing using kerosene or other solvent lubricant until finish reamer is completely thru bushing. Remove cover and reamer together. Clean out all chips. Install new oil seal, as required.

On rebushed cylinders that were breaker point equipped, a burr may occur in breaker point plunger hole. Use Finish Reamer, Tool #19058, to remove burr.

To Install Bushing, Sump (Steel Backed Aluminum)

Place bushing on outside of sump with two notches in line with two oil grooves on inside and against reamed out bearing. Note position of split in bushing. With a chisel or screwdriver and hammer, make a notch in reamed out bearing opposite split in bushing, Fig. 925.

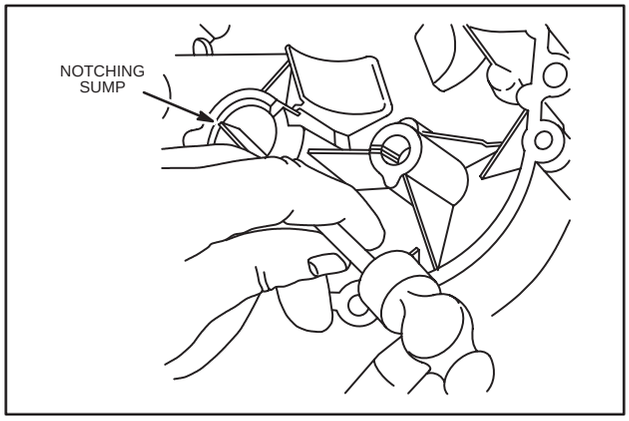

Fig. 925 – NOTCHING SUMP

Select tools from Table No. 12 to press in new bushing. Press in new bushing until bushing is flush with outer edge of reamed out bearing. If notches do not line up, bushing can be pressed thru into recess of cylinder support and reinstalled.

Stake bushing into notch that was made before bushing was pressed in. Reassemble cylinder and sump and finish ream new bushing with tools from Table No. 12. Lubricate reamer with kerosene or other solvent lubricant until reamer is completely thru bushing. Remove sump and reamer together and clean out all chips. Install new oil seal.

To Install DU™ Bushing, Cylinder or Crankcase Cover

Place DU™ bearing on cylinder or cover bearing with oil hole in line with oil hole in cylinder or cover bearing. If cover bearing does not have oil hole, place split of bearing as shown in Fig. 926.

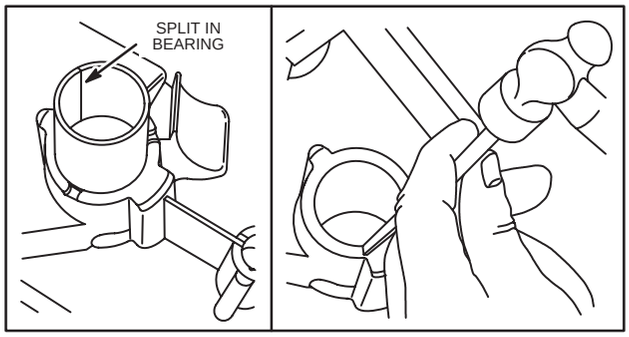

Fig. 926 – LOCATING BEARING

BEARINGS, (cont'd)

Press bearing to dimension shown in Table No. 14 and Fig. 927.

Table No. 14

MODEL SERIES	DEPTH MAG.	DEPTH P.T.O.
6B, 60000, 8B, 80000, 90000, 1002000, 100900, 110000, 130000	1/32"	1/32"
140000, 170000, 190000	3/32"	1/32"
171700, 191700	1/64"	*
220000, 250000	7/64"	1/8"

* No DU™ available, use steel backed aluminum as listed in illustrated parts list.

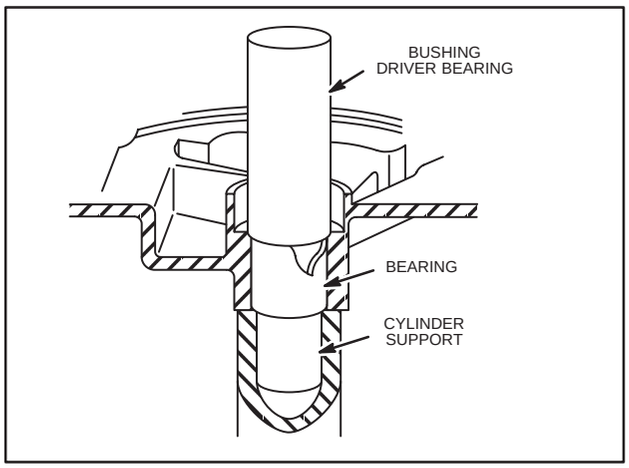

Fig. 927 – PRESSING BEARING

Stake bearing as shown, Fig's. 928, 929, 930, and 931 based on Model Series.

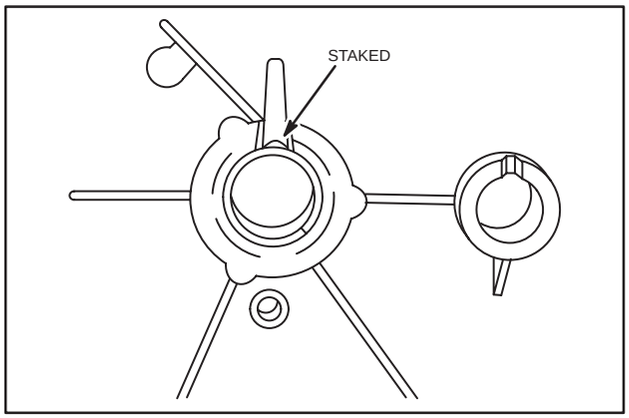

Fig. 928 – STAKING BEARING MODEL SERIES 6B, 8B, 60000, 80000, 90000, 100200, 100900, 110000, 120000, 130000 CYLINDER OR CRANKCASE COVER

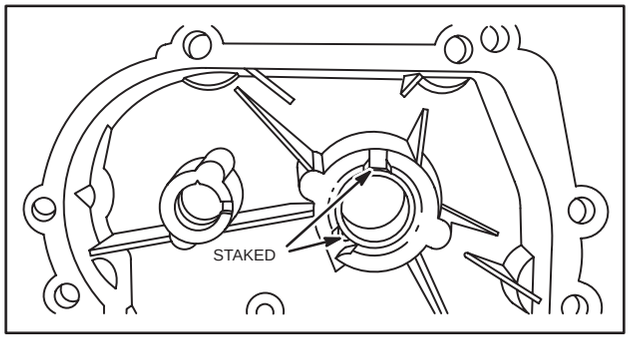

Fig. 929 – STAKING BEARING MODEL SERIES 6BH, 8BH, 60000, 80000, 90000, 100200, 100900, 110000, 120000, 130000, SUMP

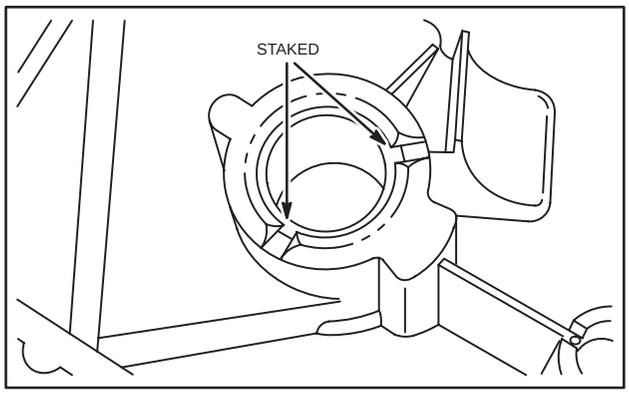

Fig. 930 – STAKING BEARING MODEL SERIES 220000, 250000 SUMP

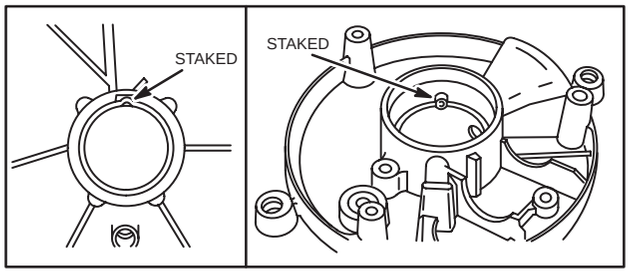

Fig. 931 – STAKING BEARING MODEL SERIES 140000, 190000, 220000, 250000 CYLINDER OR CRANKCASE COVER

NOTE: Models 8B-HA, 80590, 81590, 82590, 80790, 81790, 82990, 92590, 92990, 110990, 111990. The magneto bearing can be replaced as above; if the sump bearing is worn, the sump must be replaced. No tools are available for replacing the sump bearing.

BEARINGS, (cont'd)

To Install Crankcase Cover or Sump All Aluminum Model Series

Use Seal Protector Kit, Tool #19356, Table No. 15, to protect oil seal when installing crankcase cover or sump. DO NOT FORCE COVER OR SUMP. Make sure mechanical governor gear is engaged with cam gear.

Table No. 15
SEAL PROTECTORS

TOOL #	COLOR	CRANKSHAFT JOURNAL SIZE
19334/1	White	.787
19334/2	Red	.875
19334/3	Blue	.984
19334/4	Orange	1.000
19334/5	Brown	1.062
19334/6	Green	1.181
19334/7	Yellow	1.378
19356/8	Purple	1.317
19356/9	Black	1.503

To Torque Crankcase Cover or Sump All Aluminum Model Series

Torque crankcase cover or sump to specifications listed in Table No. 16.

Table No. 16
CRANKCASE COVER OR SUMP TORQUE

MODEL SERIES	TORQUE In. Lbs.
60000, 80000, 90000	85
100200, 100900	120
100700, 110000	85
130000	120
170000, 190000, 220000, 250000	140

To Install Crankcase Cover or Sump All Aluminum Model Series

Use Seal Protector Kit, Tool #19356, Table No. 15, to protect oil seal when installing crankcase cover or sump. DO NOT FORCE COVER OR SUMP. Make sure mechanical governor gear is engaged with cam gear.

To Check Cam Gear Bearing

Check cam gear bearing using #19164 plug gauge as shown, Fig. 932. If 1/4" or more of gauge enters bearing bore, bearing is worn beyond reject, and the cylinder, sump or crankcase cover must be replaced.

NOTE: On Model Series 111200, 112200, 111900, 112900, Plug Gauge, Tool #19164, is used on the sump or crankcase cover cam gear bearing. Reject size for cylinder cam gear bearing is .443" or larger. On auxiliary drive Model Series 110980, PTO reject size is .493". No gauge is available for these bearings.

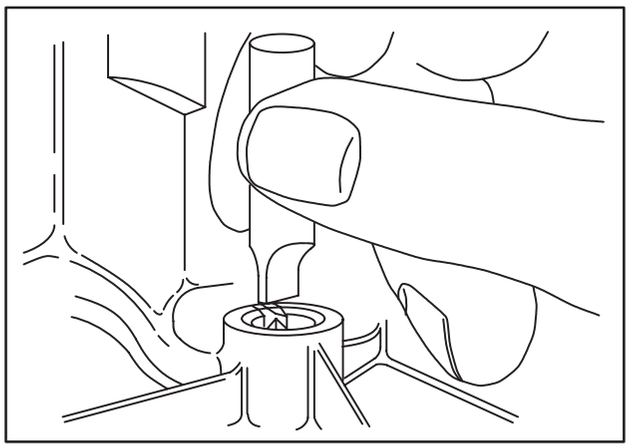

Fig. 932 – CHECKING CAM GEAR BEARING

Section 11
SPECIAL INSTRUCTIONS

This chapter consists of special information on miscellaneous topics which are not otherwise covered. These scattered subjects are, of course, hard to catalog and so are not in any particular arrangement. As changes occur and new information is needed it will be forwarded to you to be added herein.

PUMPING OIL

Models FI, FJ

If you receive engines of either of these two (2) models which are pumping oil, the trouble can usually be corrected by installing an L type breather, Part #69259 (NLA), and extension piece, Part #61385 (NLA), in place of the standard breather. When making this change, be sure to shellac all joints.

Other Models

Oil pumping can be caused by the center compression ring being installed upside down if it is the wiper type. Be sure the wiper or recessed edge is installed down toward the oil ring.

POWER LOST WHEN HOT

Model FI

Some of these models were equipped with a large spark plug hole in the cylinder head. The plug becomes overheated and causes pre-ignition. To correct, remove spark plug. Install plug nipple, Part #67773 (NLA), with gasket, Part #27090 (NLA), and then install spark plug in nipple.

All Models

Be sure all cooling fins and spaces are clean so air can reach all parts for cooling.

ASSEMBLING CAP SCREWS TO ALUMINUM PARTS

All Models

Always apply graphite grease to cap screws when assembling them to aluminum parts.

WARPED MAGNETO PLATE

All Models

Magneto plates sometimes warp. When this occurs it permits oil leaks between the magneto plate and crankcase. To correct this, mount magneto plate in a lathe and turn down mounting surface until it is level After this operation always check crankshaft end play and make necessary adjustment as outlined in Section 6.

WORN THRUST FACE ON CRANKCASE COVER

Models B, K

If the thrust face on the crankcase cover becomes worn it may be repaired by using bronze thrust washer, Part #62883 (NLA), Fig. 113. Proceed as follows:

Place crankcase cover in a lathe and cut down thrust face until distance between thrust face and mounting is 3/8," Fig. 113, Ill. 1. Drill two (2) No. 31 holes in the thrust face using thrust washer, Part #62883 (NLA) as a jig. Holes should be on a horizontal line with the center of bearing. Be sure washer is centered, Fig. 113, Ill. 2.

Press into each hole a brass pin, Part #67023 (NLA), so they are flush, or 1/16" less than flush, with the face of the washer. Assemble washer so the oil groove is toward crankshaft. Check and correct end play.

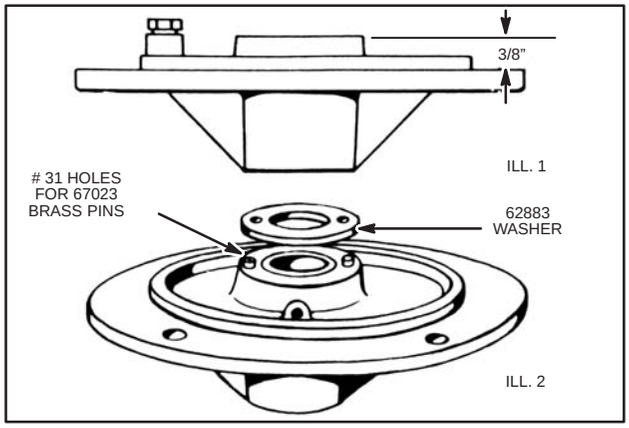

Fig. 113 – REPAIRING WORN THRUST FACE

SPECIAL INSTRUCTIONS, (cont'd)

OIL LEAKS AT EXHAUST VALVE PUSH ROD HOLE

Models F, FB, FC, FE, FG, FH

Oil leaks at the exhaust valve push rod hole on these models may be caused by the factors listed below together with the remedy for correcting the trouble:

1. Dirt or paint on the push rod or in the push rod hole of the crankcase. To correct, remove push rod. Clean rod and hole thoroughly. Be sure to remove all paint from the rod where it enters the hole.
2. Push rod is bent and not free to turn in the push rod hole of crankcase. If this is evident, straighten push rod and be sure it turns freely when the exhaust valve is closed.
3. The push rod and hole are worn, Fig. 114.

Drill push rod hole 7/16" deep in crankcase with a 23/64" dia. x 8-1/2" long drill. Then ream hole with a 3/8" dia. reamer. Press in bushing, Part #63431 (NLA) and ream hole in bushing with a No. 10 Drill or .193" extension drill. The extension on the No. 10 drill must be long enough so that the drill chuck will clear the cylinder fins. Install new push rod, Part #23566 (NLA).

NOTE: When inspecting any of these engines that cannot be run when received, check the push rod hole with a No. 9 drill. If the No. 9 drill enters the push rod hole, a Part #63431 (NLA) bushing must be installed.

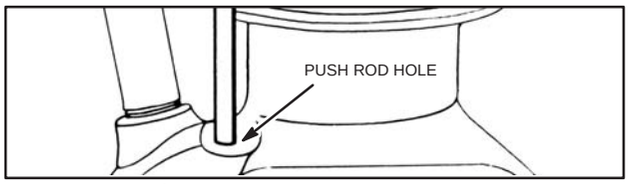

Fig. 114 – PUSH ROD HOLE

TO REMOVE RUSTED FLYWHEEL

Models A, B

Remove blower housing, rope starter pulley, crank starter pinion, or, flywheel nut. Assemble flywheel puller, Tool #19053, to flywheel and tighten cap screws. Apply pressure at the outer rim of flywheel with one hand to take up crankshaft end play. While applying this pressure, strike flywheel puller several sharp blows with a one (1) pound hammer until the flywheel comes off.

WARNING: Wear eye protection when using a hammer.

In rare cases, the flywheel hub is rusted to the crankshaft and above procedure will not remove it. In such case proceed as follows:

Place engine on drill press table and block it so that flywheel is uppermost and in a horizontal plane, Fig. 115. Drill a series of 1/4" holes that overlap around the steel hub on the line at which steel hub and die cast metal meet. Drill holes at a point between base and crankshaft until hub separates from outer portion of flywheel Rotate flywheel for each successive hole. This will avoid damaging coil and contact points. Set the engine on a bench and turn crankshaft until keyway in hub is the uppermost position. Place a block under hub and split hub at the keyway with a sharp cold chisel, Fig. 116.

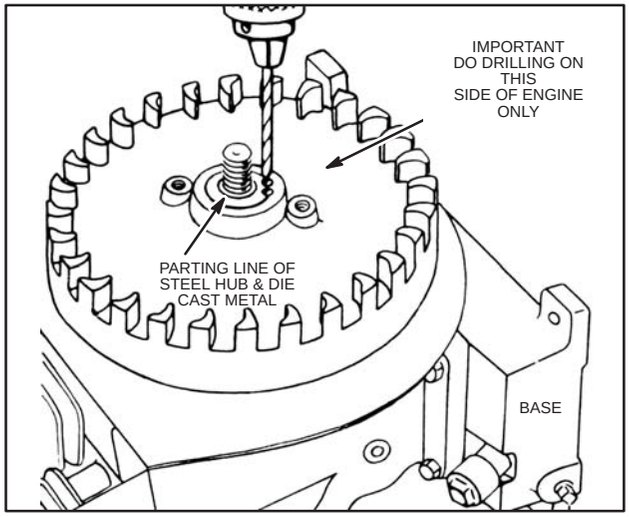

Fig. 115 – REMOVING RUSTED FLYWHEEL

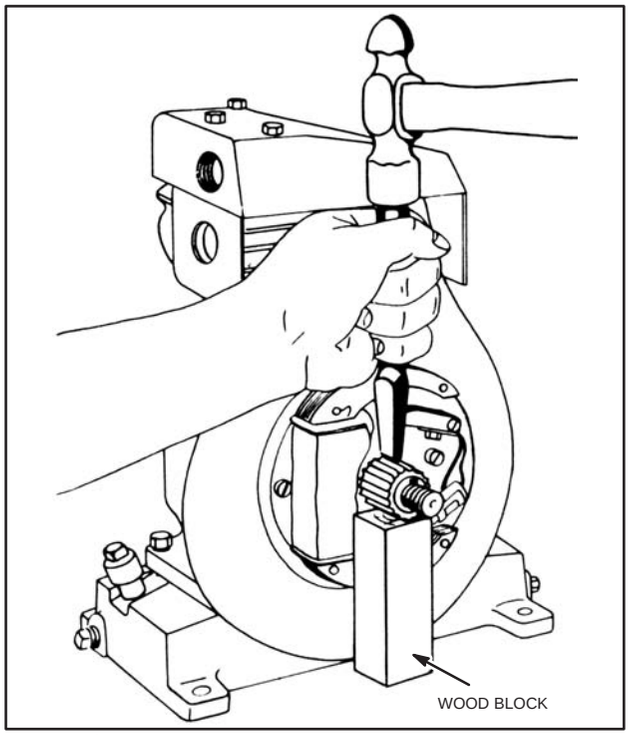

Fig. 116 – REMOVING FLYWHEEL HUB

SPECIAL INSTRUCTIONS, (cont'd)

GEAR REDUCTION ASSEMBLIES

TO REAM REDUCTION GEAR COVER BUSHING

Models IR, NR

(We recommend the use of expansion reamer Type A.L.P. .730" to .780" manufactured by Lempco Products Co., Bedford, Ohio. This reamer includes tapered guide bushing.)

1. Remove old bushing from gear cover.
2. Press in new bushing, Part #23911 (NLA). Be sure oil hole in cover and bushing are aligned. Bushing is slightly shorter that the thickness of cover and equal space should be allowed at each end.
3. Assemble cover to cylinder without gears and clamp cylinder in vise with cover up.
4. Insert guide bushing into drive bushing from inside the cylinder. Use end of guide that fits best.
5. Insert reamer as shown in Fig. 117. Ream to .750"-.7515". Continue to turn reamer to right while removing it from bushing.

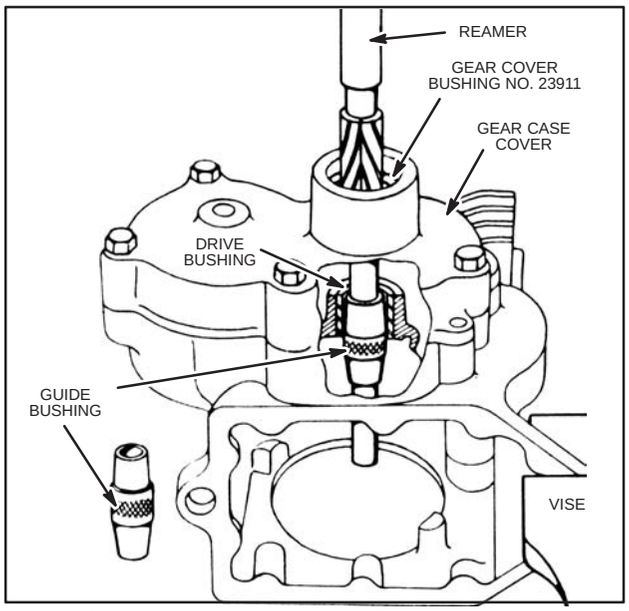

Fig. 117 – INSERTING GUIDE BUSHING

To Assemble Gear Case Cover Models IR, WR, NR, UR

Models IR, WR

1. Place thrust washer, Part #22078 (NLA), in gear case cover, oil groove up, on thrust face at intermediate gear shaft. Locate it with dowel pin. Use a little grease to hold it in place, Fig. 118.
2. If intermediate gear has too much end play and drive shaft end play is correct, remove gear case cover and place steel shim, Part #22872 (NLA), under thrust washer, Part #22078 (NLA). Use a little grease to hold them in place, Fig. 118.

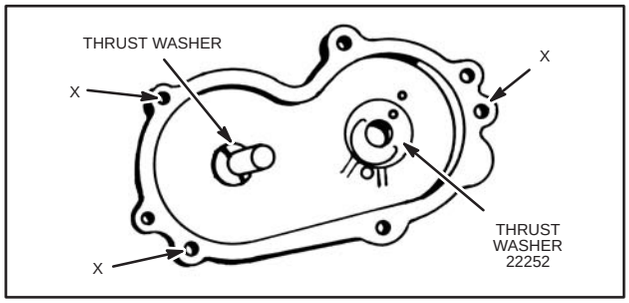

Fig. 118

Models NR, UR

1. Proceed as above but place thrust washer, Part #22252 (NLA), at drive shaft hole, Fig. 118.
2. Place intermediate gear in recess of crankcase, Fig. 119.

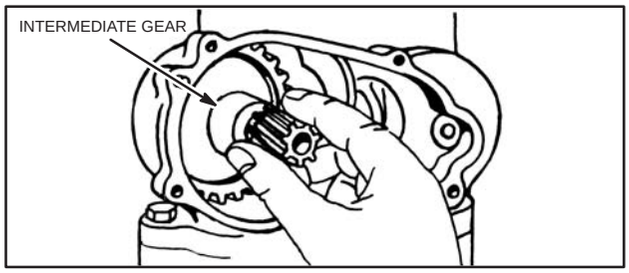

Fig. 119

3. Put drive gear shaft through bearing in gear case as shown in Fig. 120. Be careful not to damage oil seal.

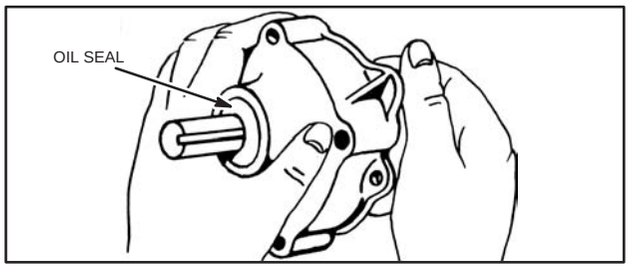

Fig. 120

4. Assemble gasket, Part #68537 (NLA) (.015" thick) to gear case dowel pins, Fig. 119.

SPECIAL INSTRUCTIONS, (cont'd)

5. Mount gear case cover by inserting the intermediate gear shaft into gear. Then turn drive gear back and forth until gears mesh and push cover in place. Tap it lightly to get in on dowel pins, Fig. 121.

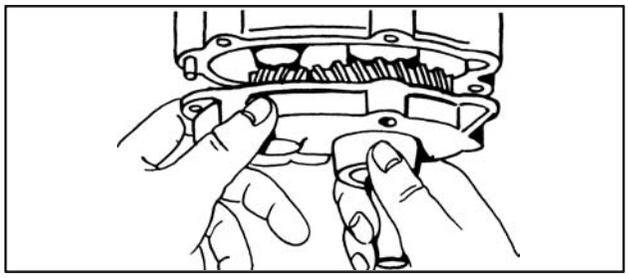

Fig. 121

6. Fasten cover with three bolts at holes marked "X" in Fig. 118.

7. Check end play of intermediate gear by inserting feeler gauge as shown in Fig. 122. End play should be .002"-.008". Note amount of end play.

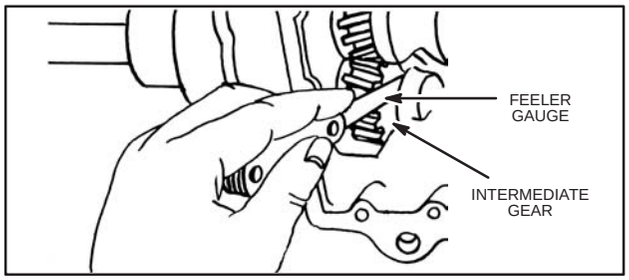

Fig. 122

8. Check end play of drive shaft with indicator as shown in Fig. 123. End play should be .002"-.008", Table No. 9.

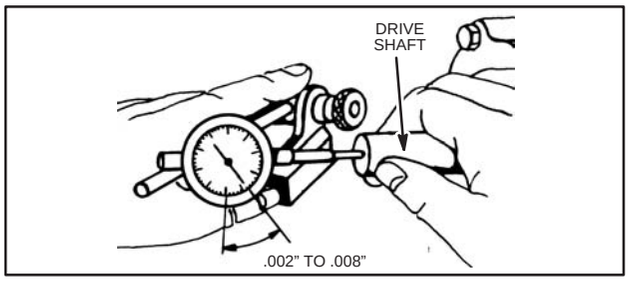

Fig. 123

9. Compare end play of drive shaft and intermediate gear. If both have too mush end play it can be reduced by removing gasket, Part #68537 (NLA) and assembling either gasket, Part #27110 (NLA) or 27111 (NLA). If they do not have enough end play, add either gasket, Part # 27110 (NLA) or 27111 (NLA) or both to gasket, Part #68537 (NLA).

10. If the drive shaft has too much end play and intermediate gear end play is correct, remove gear case cover and place steel shim, Part #22875 (NLA) under thrust washer, Part #22252 (NLA). Use a little grease to hold them in place, Fig. 118.

11. Assemble remaining gear cover mounting screws. DO NOT put grease into the gear case. The gears are lubricated by oil from the crankcase.

Table No. 9
GEAR REDUCTION DRIVE SHAFT END PLAY

ENGINE MODEL	AMOUNT OF END PLAY	HOW TO ADJUST
IR, NR, UR, WR	.002"-.008"	SEE ABOVE

To Assemble Gear Reduction Assemblies
Models AR, BR, KR, ZR, ZZR

These parts are assembled with a .002"-.005" preload on the bearings. In other words, instead of the drive shaft having end play, it will be .002"-.005" tight, Table No. 10.

Table No. 10
GEAR REDUCTION DRIVE SHAFT END PLAY

ENGINE MODEL	AMOUNT OF END PLAY	HOW TO ADJUST
AR, BR, KR, ZR, ZZR	MINUS .002" to MINUS .005"	SEE ABOVE
NPR6, NSPR6, WIPR6, 8R6	.002" to .032"	NO ADJUSTMENT
NPR1.6, NSPR1.6, WIPR1.6	.004" to .026"	NO ADJUSTMENT
9R6, 14R, 23R	.001" to .014"	NO ADJUSTMENT

These instructions cover the following part numbers.

290552 (NLA) – Shaft & Gear
290553 (NLA) – Shaft & Cover
290559 (NLA) – Gear Case Assembly
290563 (NLA) – Gear Case Assembly
290564 (NLA) – Cover Assembly
290567 (NLA) – Drive Shaft Assembly
290571 (NLA) – Shaft & Gear Case
290573 (NLA) – Gear Case Assembly
290574 – Gear Cover Assembly
290637 (NLA) – Shaft & Cover
290638 – Drive Shaft Assembly
290650 (NLA) – Shaft & Cover
290651 (NLA) – Drive Shaft Assembly
290660 (NLA) – Cover Assembly
290835 (NLA) – Shaft & Gear Case

SPECIAL INSTRUCTIONS, (cont'd)

1. Assemble gear case to crankcase of engine with cap screws and lockwashers, Fig. 124.

NOTE: Model BR. Be sure that the bronze thrust washer does not fall off the two (2) dowel pins. If it does, the crankshaft end play will be lost. Oil grooves in washer should be toward crankshaft.

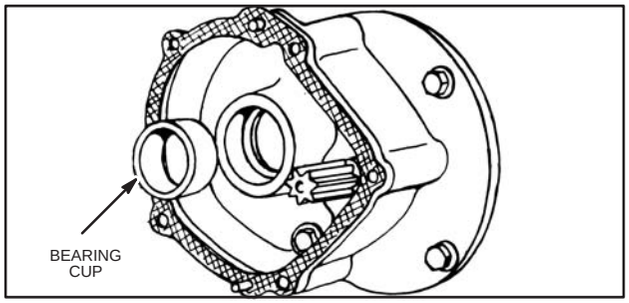

Fig. 124

2. If new drive shaft is equipped with bearing cones, remove bearing cones from old drive shaft. Heat bearing cones in oil so they will expand and slip onto new shaft. Be sure cone is against flange, Fig. 125.

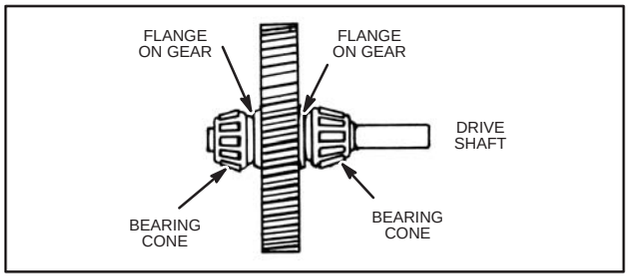

Fig. 125

3. Assemble drive shaft and gear with bearing cones by placing a piece of shim stock or card in oil seal to serve as a guide and protect oil seal, Fig. 126. Next place roller bearing cup into recess of gear case cover. Then insert drive shaft through oil seal.

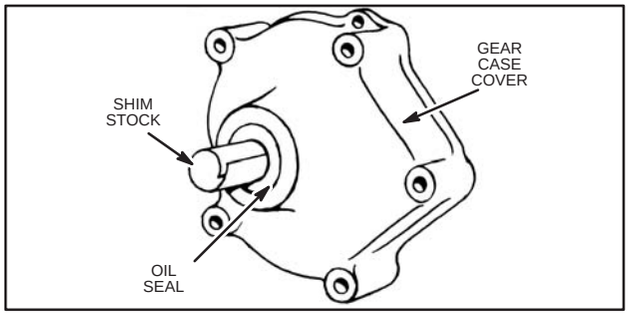

Fig. 126

4. Place gear case cover gasket over dowel pins in gear case, Fig. 124.

5. Assemble drive shaft and gear and gear case cover to gear case with cap screws.

6. Place an indicator at end of drive shaft, Fig. 127, and pull gear in and out to check end play, while rotating the shaft slowly. After determining end play, remove gear case cover and drive shaft from gear case. Then place as many .003" and .010" shims as required back of gear case cover roller bearing cup. See Fig. 128 and note below. The bearings are assembled with a .002"-.005" pre-load. That is the total thickness of the shims must be .002"-.005" more than the end play without shims. Then reassemble parts. If you do not have an indicator, assemble a sprocket or pulley to drive shaft and check end play with a feeler gauge, Fig. 129.

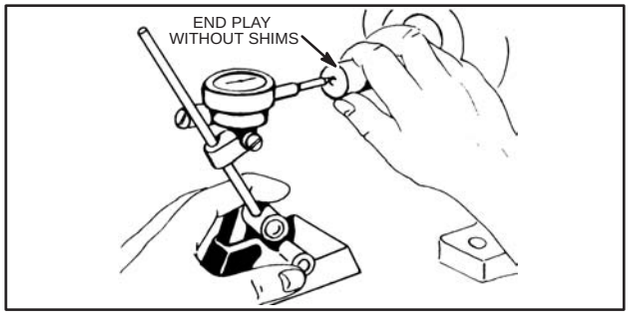

Fig. 127

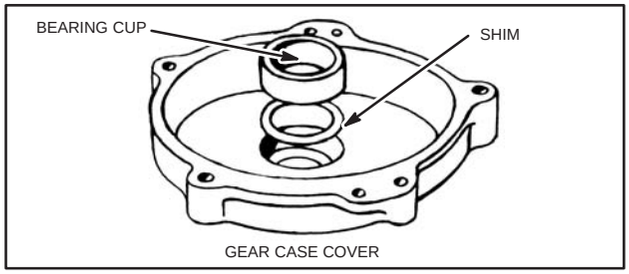

Fig. 128

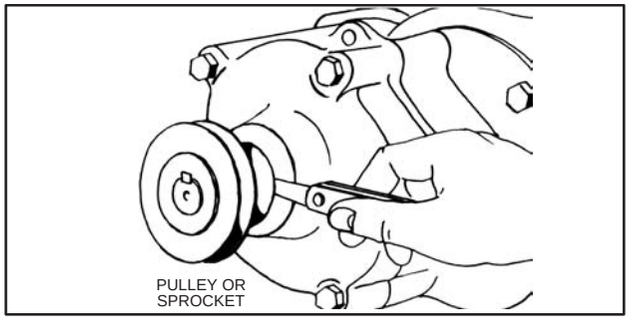

Fig. 129

NOTE: To assemble part numbers 290573 (NLA), 290559 (NLA), and 290563 (NLA) gear case assemble follow instructions above except place the shims back of roller bearing cup in gear case, Fig. 124.

SPECIAL INSTRUCTIONS, (cont'd)

GEAR REDUCTION, MODEL SERIES CAST IRON N, 6, 8, ALUMINUM 6B, 8B, 60000, 80000, 100200, 110000, 130000

To Drain and Disassemble Gear Reduction

1. Note position of gear reduction assembly on engine.
2. Remove oil vent plug.
3. Loosen four cap screws holding gear case cover assembly.
4. Pull cover away from gear case assembly to drain gear case.
5. After gear case is drained, remove screws and cover, Fig. 130.

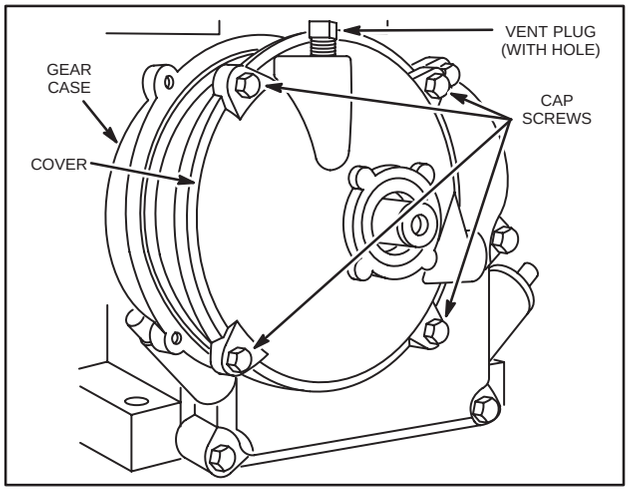

Fig. 130 – DRAINING GEAR REDUCTION AND REMOVING COVER

To Remove Output Gear-PTO Shaft Assembly and Gear Case Assembly

1. Remove drive shaft assembly from gear case.
2. Bend down two screw locks if so equipped, and remove four cap screws.
3. Slide gear case off engine, Fig. 131.

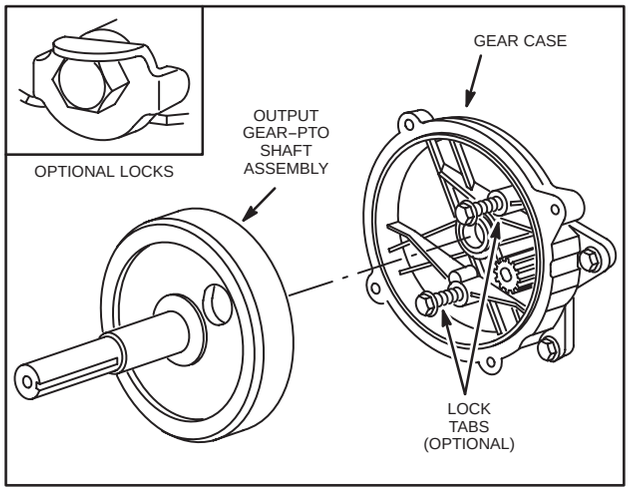

Fig. 131 – REMOVING DRIVE GEAR AND GEAR CASE

To Inspect Output Gear-PTO Shaft, Gear Case and Cover Assemblies

Inspect seals for cracks, tears, or hardening. Replace seals if damaged or hard. Inspect crankshaft pinion gear and drive gear for worn, cracked, or chipped teeth. Replace if damaged or worn. Inspect gear case and cover for cracks, damaged mounting or gasket surfaces. Replace if damaged.

To ASSEMBLE GEAR REDUCTION

To Install Seals

Install seals with sealing lip towards inside of gear case or cover assemblies until seal is flush with case or cover, Fig. 132.

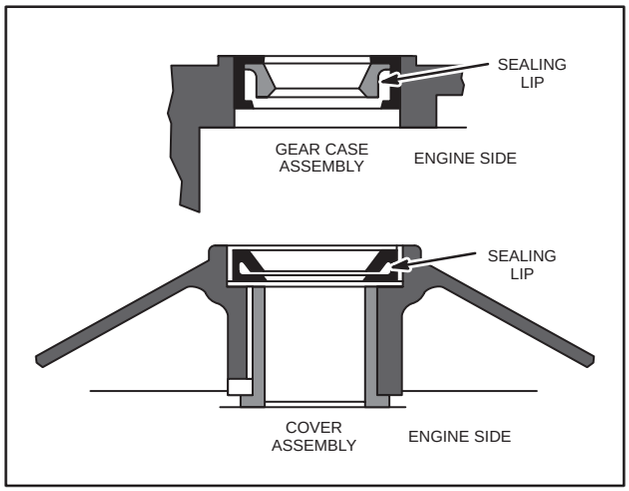

Fig. 132 – INSTALLING SEALS

SPECIAL INSTRUCTIONS, (cont'd)

To Install Gear Case Assembly

NOTE: The housing must be installed in the same position as when removed, Fig. 133.

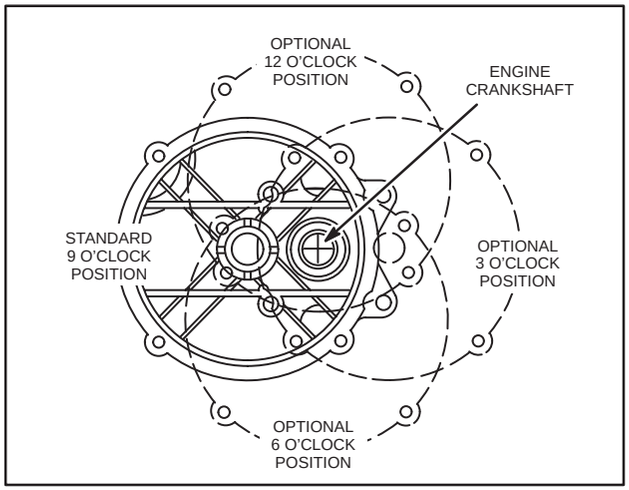

Fig. 133 – POSITIONING BEARING HOUSING ASSEMBLY

1. Install cork gasket on crankcase cover (when used).

2. Slide gear case assembly onto crankshaft and bearing housing assembly.

3. Install two short screws and lockwashers.

4. Install two long screws and screw locks if so equipped with tabs down and next to gear case ribs of gear case.

5. Torque four screws to 140 in. lbs. (15.8 Nm).

6. Bend locks up against flats on head of cap screws, Fig. 134, when used.

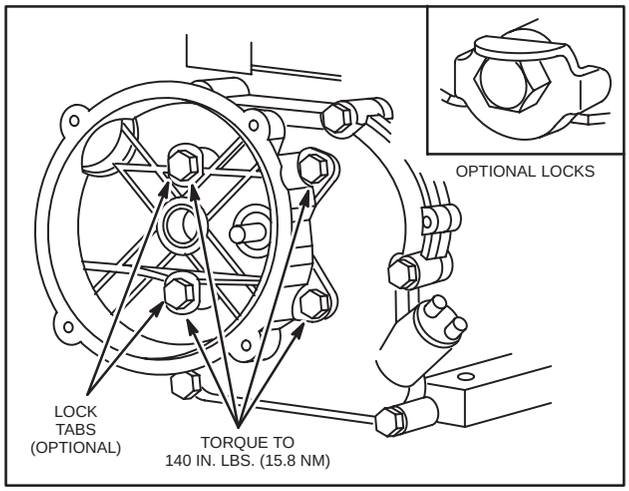

Fig. 134 – INSTALLING GEAR CASE

7. Slide output gear and PTO shaft assembly into gear case bearing and engage crankshaft pinion gear.

8. Insert WHITE Seal Protector, Tool #19334 or #19356, into seal of gear case cover.

9. Place new gasket on gear case assembly.

10. Slide cover and seal protector on to gear case and drive shaft until cover is seated on new gasket. Remove seal protector.

11. Torque four screws to 90 in. lbs. (10.2 Nm), Fig. 135.

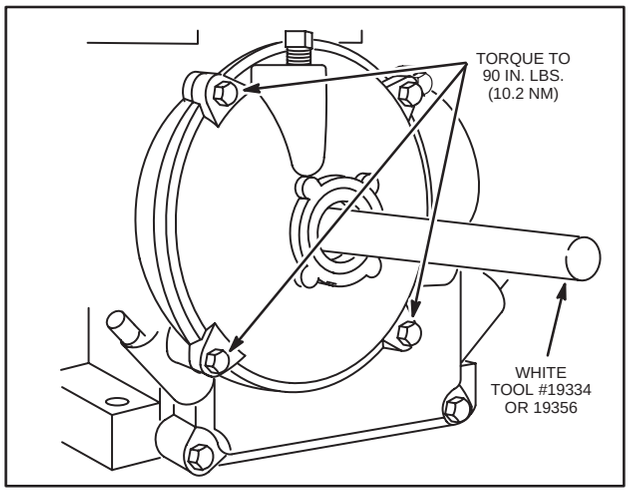

Fig. 135 – INSTALLING GEAR CASE COVER

SPECIAL INSTRUCTIONS, (cont'd)

To Fill Gear Case with Lubricant

1. To fill gear case, remove oil level plug with allen wrench and vent plug.

2. Fill gear case with SAE 30 weight oil for temperatures above 40° F (10° C). Use 10W30 weight oil between 40° F (10° C) and 0° F (-17° C). Use 5W20 or 5W30 weight oil below 0° F (-17° C).

3. Fill gear case just to the point of overflowing at the lower hole.

4. Install allen socket plug in lower hole and torque to 90 in. lbs. (10.2 Nm).

5. Install vent plug with hole in top hole and torque to 40 in. lbs. (4.5 Nm), Fig. 136.

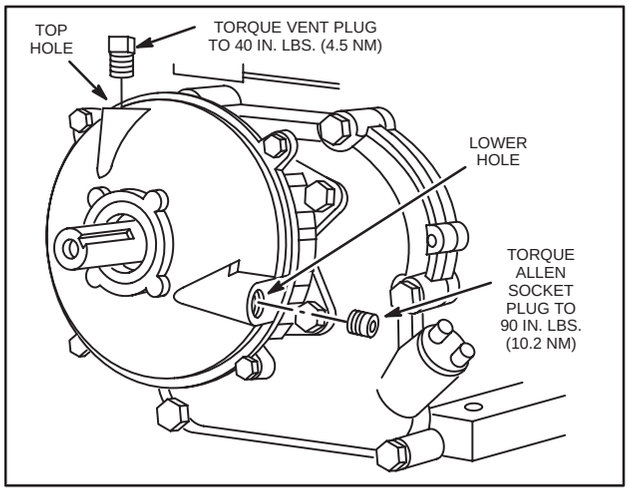

Fig. 136 – FILLING GEAR CASE

GEAR REDUCTION, MODEL SERIES 170000, 190000, 220000, 230000, 240000, COUNTERCLOCKWISE ROTATION

To Drain and Disassemble Gear Reduction

1. Remove oil vent plug if so equipped.

2. Then remove drain plug from bottom of gear case cover assembly.

3. After gear case is drained, loosen and remove four cap screws and cover, Fig. 137.

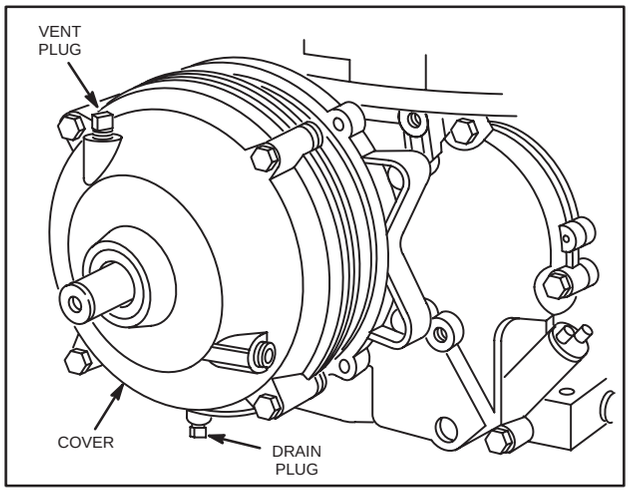

Fig. 137 – DRAINING GEAR REDUCTION AND REMOVING COVER

To Remove Drive Shaft Assembly and Gear Case Assembly

1. Note position of gear case assembly, Fig. 140.

2. Remove drive shaft assembly off gear case.

3. Bend down two screw locks if so equipped, and remove four cap screws.

4. Slide gear case assembly from engine, Fig. 138.

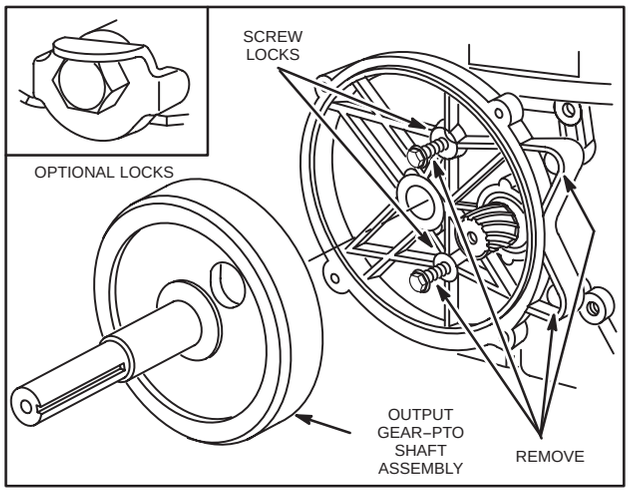

Fig. 138 – REMOVING GEAR CASE

SPECIAL INSTRUCTIONS, (cont'd)

To Inspect Output Gear-PTO Shaft, Gear Case and Cover Assemblies

Inspect seals for cracks, tears, or hardening. Replace seals if damaged or hard. Inspect crankshaft pinion gear and drive gear for worn, cracked, or chipped teeth. Replace if damaged or worn. Inspect gear case and cover assemblies for cracks, damaged mounting or gasket surfaces. Replace if damaged.

TO ASSEMBLE GEAR REDUCTION

To Install Seals

Install seal(s) with sealing lip towards inside of gear case or cover until seal is flush with surface of case (when used) or cover, Fig. 139.

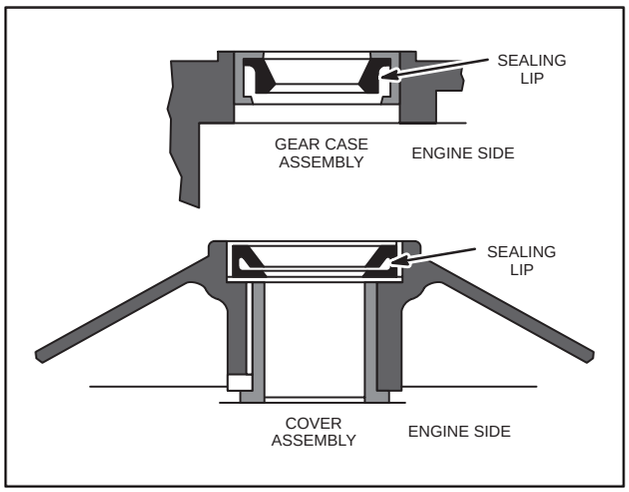

Fig. 139 – INSTALLING SEALS

To Install Gear Case Assembly

1. Install gear case assembly in original position, Fig. 140.

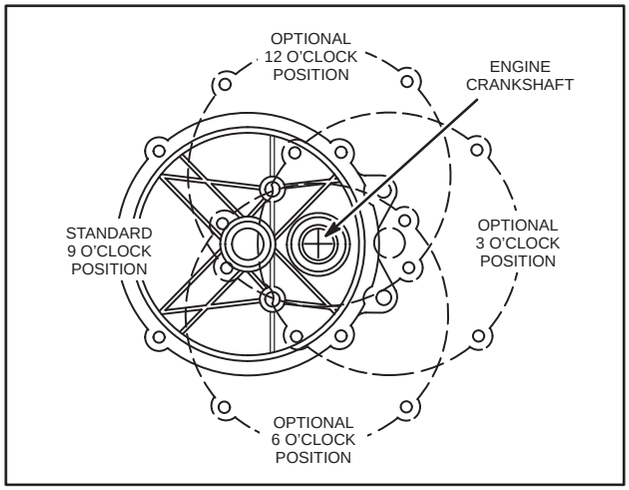

Fig. 140 – POSITIONING GEAR CASE ASSEMBLY

2. Slide gear case assembly and new gasket onto crankshaft and crankcase cover assembly.
3. Install two short screws and lockwashers.
4. Install two long screws and screw locks with tabs down, if so equipped, and next to gear case ribs of gear case.
5. Torque four screws to 140 in. lbs. (15.8 Nm).
6. Bend locks up against flats on head of cap screws, Fig. 141.

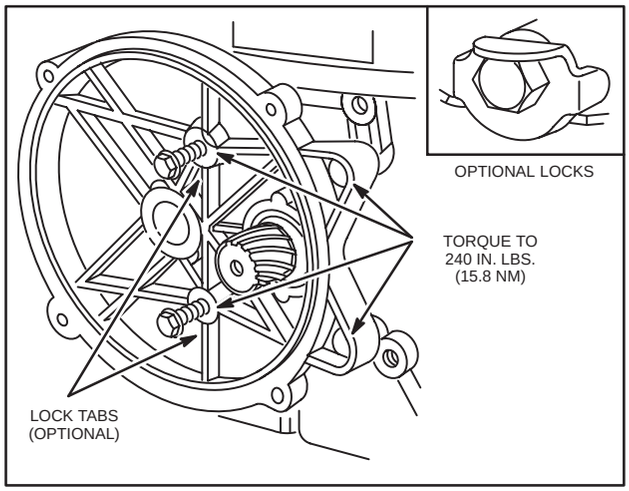

Fig. 141 – INSTALLING GEAR CASE

7. Slide drive shaft assembly into gear case bearing and engage crankshaft pinion gear.

SPECIAL INSTRUCTIONS, (cont'd)

8. Insert GREEN Seal Protector, Tool #19334 or #19356, into seal of gear case cover.

9. Place new gasket on gear case assembly.

10. Slide cover and seal protector unto gear case until cover is seated on new gasket.

11. Remove seal protector.

12. Torque four screws to 190 in. lbs. (21.4 Nm), Fig. 142.

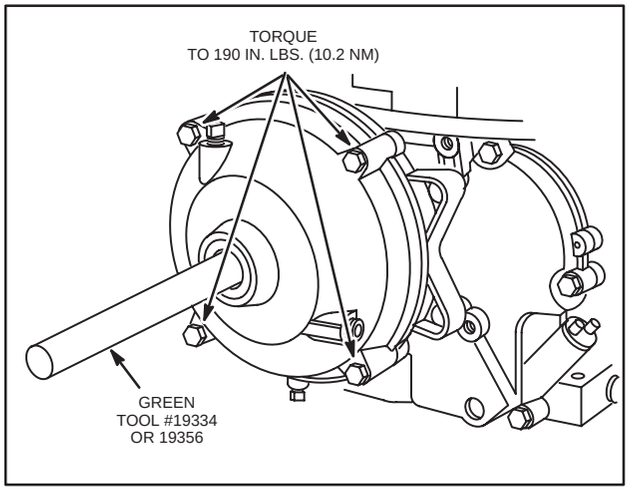

Fig. 142 – INSTALLING GEAR CASE COVER

NOTE: On Model Series 230000, 240000, the gear reduction and the engine use the same oil supply.

6. Fill the crankcase with the proper weight and service classification oil for the temperature that the engine will be run at.

7. Start and run engine and then stop engine.

8. Recheck oil level and add oil as required to bring engine oil level up to full. See Section 8, Lubrication.

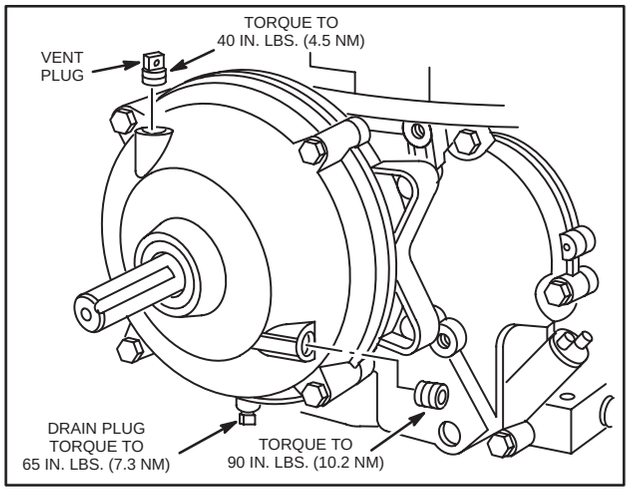

Fig. 143 – FILLING GEAR CASE

To Fill Gear Case with Lubricant

1. Install drain plug in bottom of gear case if so equipped, and torque to 65 in. lbs. (7.3 Nm).

2. To fill gear case, remove oil level plug with allen wrench. Fill gear case with SAE 30 weight oil for temperatures above 40° F (10° C). Use 10W30 weight oil between 40° F (10° C) and 0° F (-17° C). Use 5W20 or 5W30 weight oil below 0° F (-17° C).

3. Fill gear case just to the point of overflowing at the lower hole.

4. Install allen socket plug in lower hole if so equipped, and torque to 90 in. lbs. (10.2 Nm).

5. Install vent plug in top hole, if so equipped, and torque to 40 in. lbs. (4.5 Nm), Fig. 143.

GEAR REDUCTION, MODEL SERIES 230000, CLOCKWISE PTO ROTATION

To Drain and Disassemble Gear Reduction

1. Note position of gear reduction case on engine. Drain gear reduction by loosening all the cover cap screws one to two turns and pulling cover away from gear case.

2. After gear case is drained, remove cap screws and cover, Fig. 144.

SPECIAL INSTRUCTIONS, (cont'd)

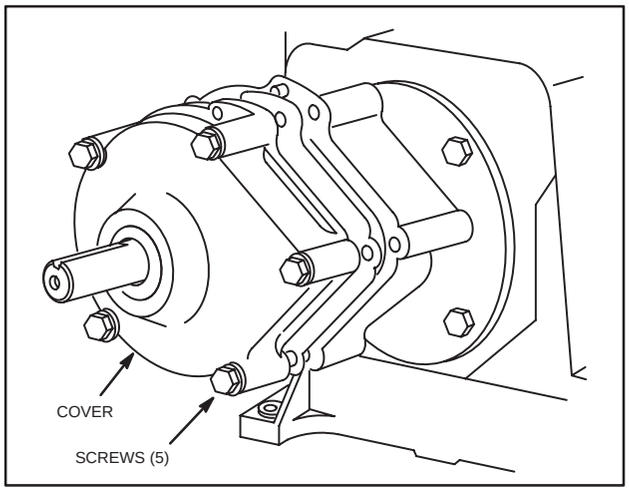

Fig. 144 – DRAINING GEAR REDUCTION AND REMOVING COVER

To Remove Drive Gear-PTO Shaft Assembly and Gear Case

Remove four cap screws and lockwashers. Slide gear case and drive shaft off engine, Fig. 145.

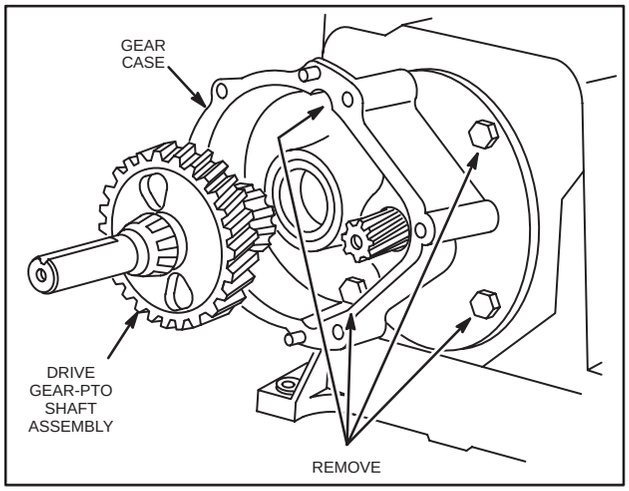

Fig. 145 – REMOVING GEAR CASE

To Remove Bearings

Bearing cup in gear case cover is a slip fit while bearing cup may be either a slip or press fit in gear case. When removing bearing cups take note of which cup has shims. Press roller bearing by supporting the bearing and pressing out the shaft and gear assembly. Do not reuse bearings that have been pressed off.

To Inspect Gear Case and Cover Assemblies

Inspect seals for cracks, tears, or hardening. Replace seals if damaged or hard. Inspect crankshaft pinion gear and drive gear for worn, cracked, or chipped teeth. Replace if damaged or worn. Inspect gear case and cover assemblies for cracks, damaged mounting or gasket surfaces. Replace if damaged. Inspect bearing cup and tapered rollers bearings for roughness, pitting and cracks. Replace if damaged.

TO ASSEMBLE GEAR REDUCTION

To Install Tapered Roller Bearings

1. Heat bearing in hot oil (350° F (177° C) max.).

NOTE: Bearing must not rest on the bottom of the pan in which it is heated.

2. Place drive shaft and gear assembly in vise with bearing side up. When bearing is quite hot it will become a slip fit on the drive shaft journal.
3. Grasp bearing and thrust it down on the drive shaft against flange of gear, Fig. 146.
4. The bearing will tighten on the shaft while cooling. DO NOT QUENCH.

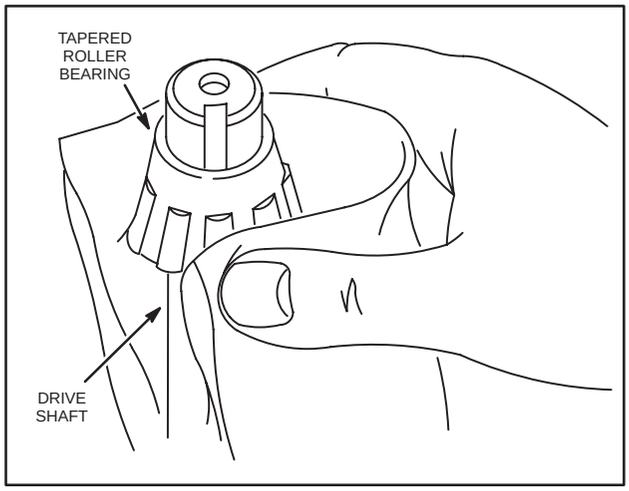

Fig. 146 – INSTALLING TAPERED ROLLER BEARINGS

To Install Seals

Install seal with sealing lip towards inside of gear case cover until metal case of seal is flush with gear case cover, Fig. 147.

SPECIAL INSTRUCTIONS, (cont'd)

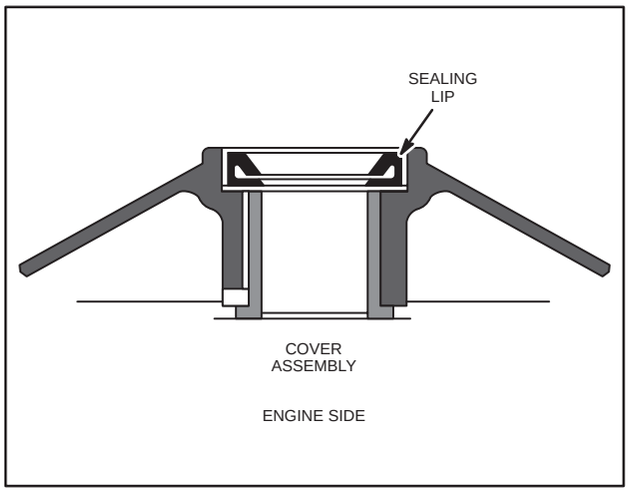

Fig. 147 – INSTALLING SEAL

To Install Gear Case Assembly

Install gear case in same position as when removed from engine, Fig. 148. Torque screws and lockwashers to 140 in. lbs. (15.8 Nm).

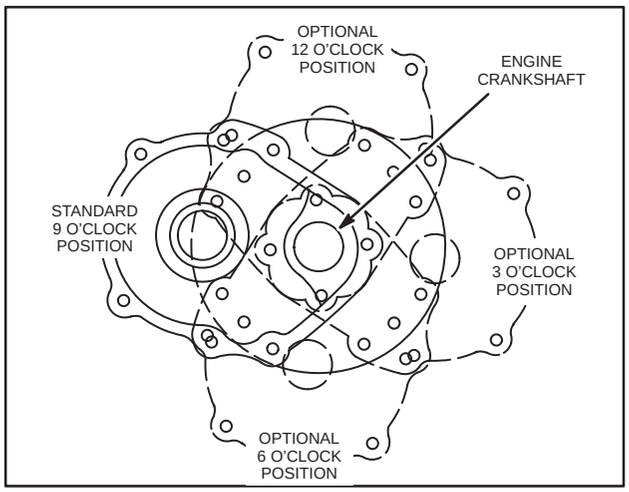

Fig. 148 – POSITIONING GEAR CASE ASSEMBLY

To Install Gear Case Cover Assembly

1. Place bearing cup in bearing cup counterbore of gear case assembly without shims.

2. Slide output gear-PTO shaft assembly into gear case bearing and engage crankshaft pinion gear.

3. Place bearing cup in bearing cup counterbore of gear case cover assembly without shims.

4. Place a new cover gasket on gear case assembly dowel pins.

5. Insert Green Seal Protector, Tool #19334 or #19356 into seal of gear case cover.

6. Slide gear case assembly and seal protector onto gear case assembly.

7. Install screws and lockwashers and torque screws to 190 in. lbs. (21.4 Nm), Fig. 149.

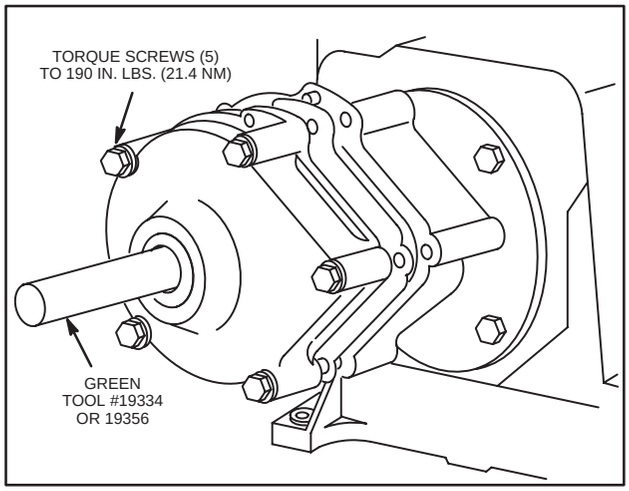

Fig. 149 – INSTALLING GEAR CASE COVER ASSEMBLY

To Adjust Roller Bearing Pre-load

1. Place a dial indicator against end of drive shaft.

2. Push in on drive shaft and turn shaft slowly to seat roller bearing in bearing cup as indicated by no further needle movement on dial indicator.

3. Set dial indicator to zero.

4. Pull out on drive shaft and rotate drive shaft slowly to seat roller bearing.

5. Note dial indicator reading.

6. Repeat both steps to verify dial indicator reading, Fig. 150.

NOTE: If a dial indicator is not available, use a sprocket or pulley and check end play as shown in Fig. 151.

SPECIAL INSTRUCTIONS, (cont'd)

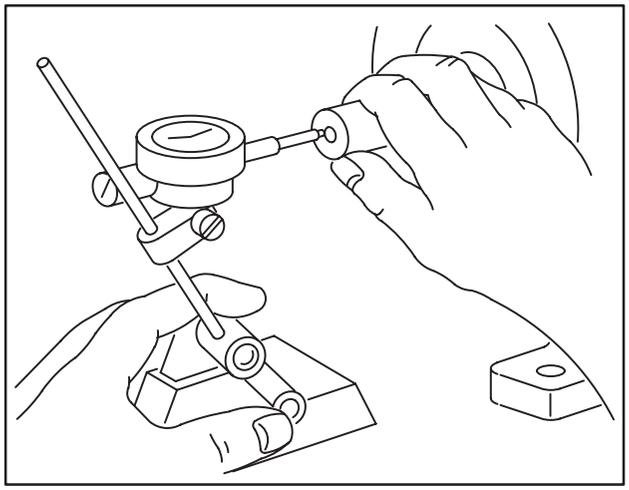

Fig. 150 – CHECKING END PLAY WITH DIAL INDICATOR

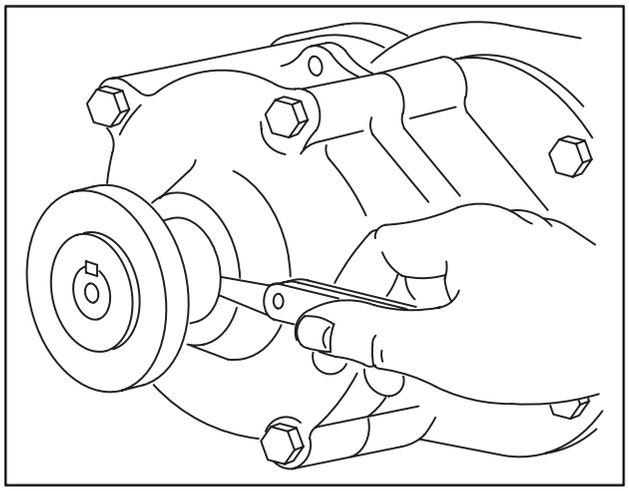

Fig. 151 – CHECKING END PLAY USING PULLEY POCKET

To Shim Bearing Cup

1. Remove gear case cover assembly and drive shaft (if shims were behind bearing cup in gear case assembly). Shims are .003" (.08 mm) and .010" (.25 mm) thick.
2. Use as many shims as needed to equal total end play plus .002" (.05 mm) to .005" (.13 mm) more than total end play without shims.
3. Install shims behind bearing cup and reinstall cup, drive shaft assembly and gear case cover assembly as outlined above in INSTALL GEAR CASE COVER ASSEMBLY.

To Fill Gear Case with Lubricant

On Model Series 230000 the gear reduction and the engine use the same oil supply.

1. Fill the crankcase with the proper weight and service classification oil for the temperature that the engine will be run at.
2. Start and run engine and then stop.
3. Recheck oil level and add oil as required to bring engine oil level up to full, Fig. 152. See Section 8, Lubrication, for oil recommendations.

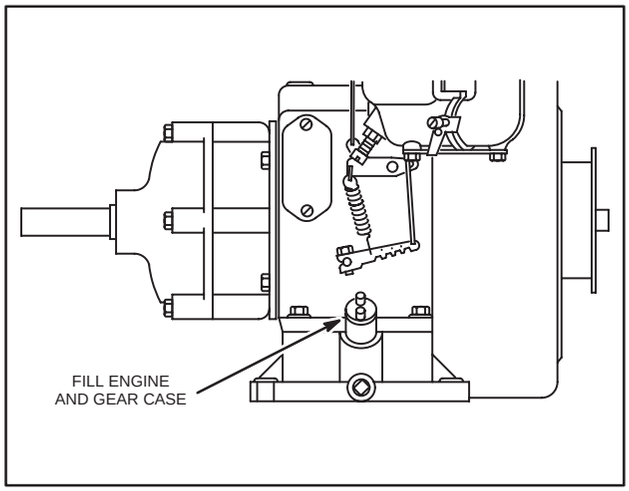

Fig. 152 – FILLING GEAR CASE

AUXILIARY PTO – MODEL SERIES 92580, 92980, 94580, 94980, 110980, 111980

This auxiliary power take-off shaft is perpendicular to the crankshaft. It rotates at the rate of one revolution for every 8-1/2 revolutions of the crankshaft. On these models, the cam gear, worm gear and oil slinger are a factory assembly and are not available as separate pieces, Fig. 153.

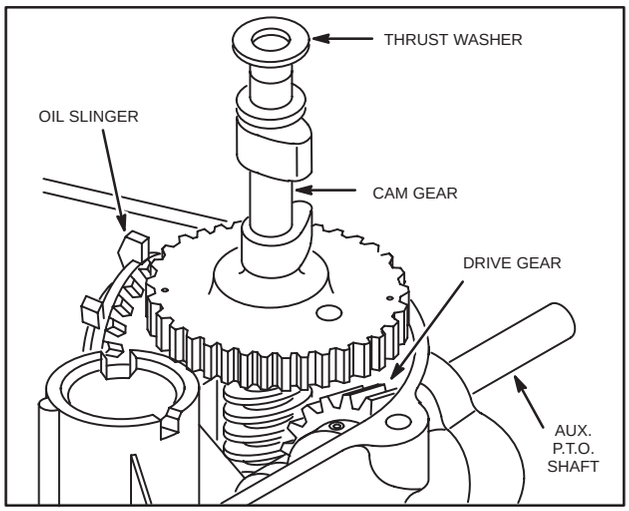

Fig. 153 – AUXILIARY PTO

SPECIAL INSTRUCTIONS, (cont'd)

NOTE: If rotation is counterclockwise, the thrust washer is placed next to the worm gear on camshaft.

To Remove Sump

1. Remove rust or burrs from the power take-off end of the crankshaft.

NOTE: One of the six (6) sump mounting screws is located under the auxiliary drive cover.

2. Remove the cover.
3. Lift out shaft stop, Fig. 154.
4. Slide gear and shaft sideways to expose head of sump mounting screw.
5. Use 7/16" socket to remove screw.
6. Remove remaining screws and remove sump.

NOTE: Use care when driving out roll pin to prevent damage to threads.

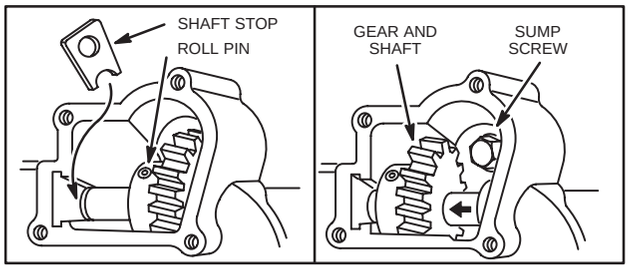

Fig. 154 – REMOVE AND INSTALL SUMP SCREW

When installing cover, Fig. 155, put non-hardening sealant on cover screws.

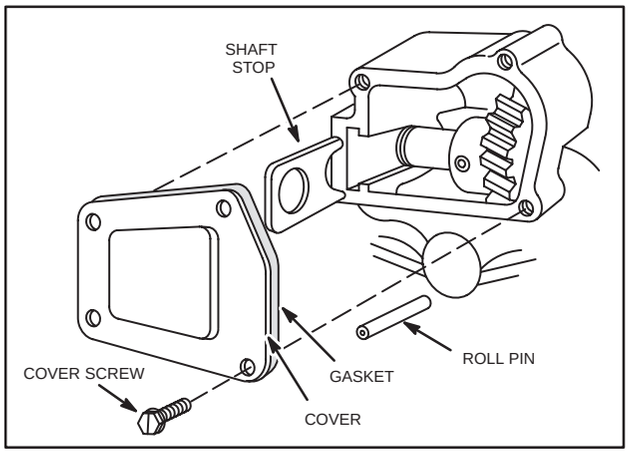

Fig. 155 – INSTALLING COVER

To Remove Sump and Auxiliary Drive Shaft with Clutch, Model Series 110980

This auxiliary power take-off shaft is perpendicular to the crankshaft. It rotates at the rate of one revolution for every 8-1/2 revolutions of the crankshaft. Rotation of the shaft is controlled by a clutch on the cam gear. The clutch is engaged or disengaged by a control lever mounted on the oil sump.

Early production cam gears, Fig. 156, are serviced as an assembly consisting of cam gear oil slinger, clutch hub, clutch spring and clutch sleeve assembly. Later production cam gears are serviced as individual parts except for the cam gear which consists of cam gear, oil slinger and clutch hub.

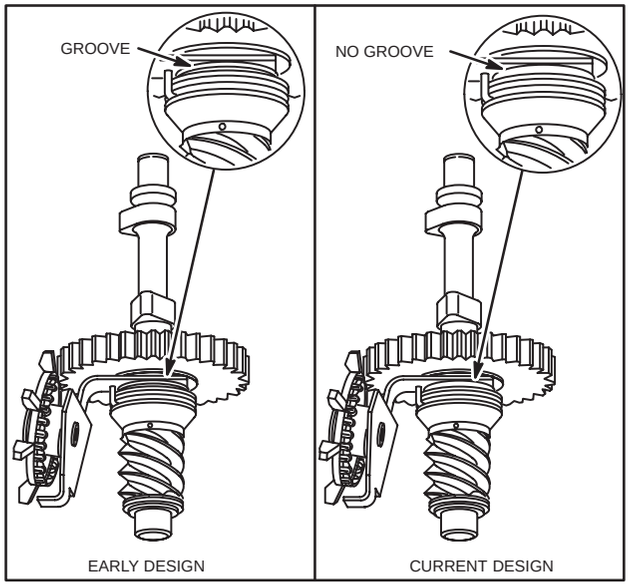

Fig. 156 – CAM GEAR AND CLUTCH

1. Remove rust or burrs from the power take-off end of the crankshaft.

NOTE: Sump is held on by six screws. Five screws are exposed. The sixth screw is under the auxiliary drive cover, Fig. 154.

2. Remove cover and lift out shaft stop, Fig. 154.
3. Slide drive shaft and gear over to expose head of cap screw. Cap screw can be removed with 7/16" socket.
4. Remove remaining screws and remove sump.

To Inspect Clutch Operation

1. Push on spring tang, "A," Fig. 157, turning spring and clutch sleeve in a counterclockwise direction.
2. Spring and sleeve should rotate approximately 1/8 turn. Worm gear should not rotate in the same direction.

SPECIAL INSTRUCTIONS, (cont'd)

3. With clutch released, worm gear should rotate freely in both directions.

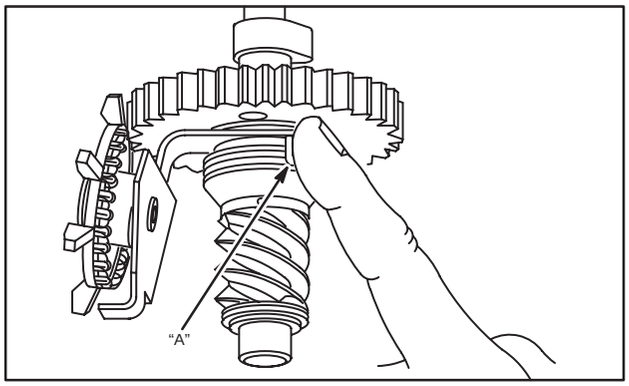

Fig. 157 – INSPECT CLUTCH

To Check Cam Gear

Check worm gear end play using feeler gauges at point "A," Fig. 158. End play should not be less than .004", (.10 mm) or more than .017" (.43 mm).

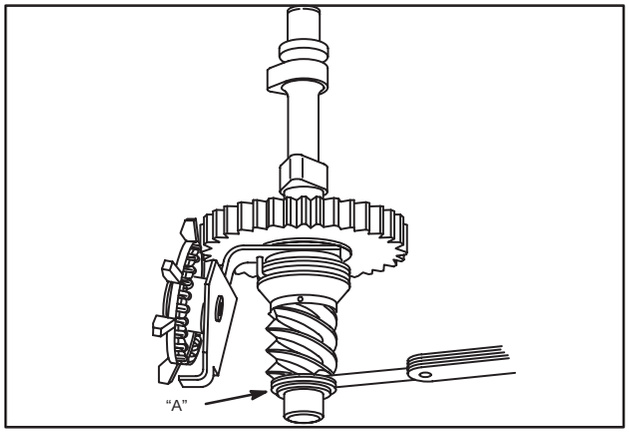

Fig. 158 – CHECK CAM GEAR

To Disassemble Cam Gear – Early Design

1. Remove "E" ring retainer.

2. Slide off copper washer, thick thrust washer, worm and thin thrust washer.

3. Cam gear, oil slinger, clutch sleeve and springs are serviced with a current production assembly.

To Inspect Parts

Inspect for worn, burred or broken parts and replace as required.

To Assemble Cam Gear – Early Design

1. Slide worm gear with thin thrust washer on cam gear.

2. Slide on thick thrust washer. Slide on copper colored washer with gray coated side toward thick thrust washer.

3. Install "E" ring retainer and check worm end play as described in "Check Cam Gear" section. Inspect cam gear assembly as outlined in "Inspect Clutch Operation" section.

To Disassemble Cam Gear – Current Design

1. Remove "E" ring.

2. Slide off thrust washers and worm gear.

3. Use thin blade screwdriver or similar tool to pry lower clutch spring tab out of hole in clutch sleeve, Fig. 159.

4. Remove clutch sleeve.

5. Slide clutch spring down, Fig. 160 and lift out upper spring tab to remove spring. Cam gear, oil slinger and clutch drive hub are serviced as an assembly.

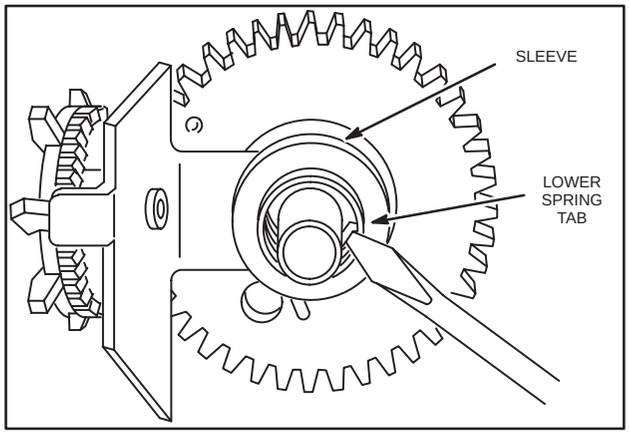

Fig. 159 – REMOVE CLUTCH SLEEVE

SPECIAL INSTRUCTIONS, (cont'd)

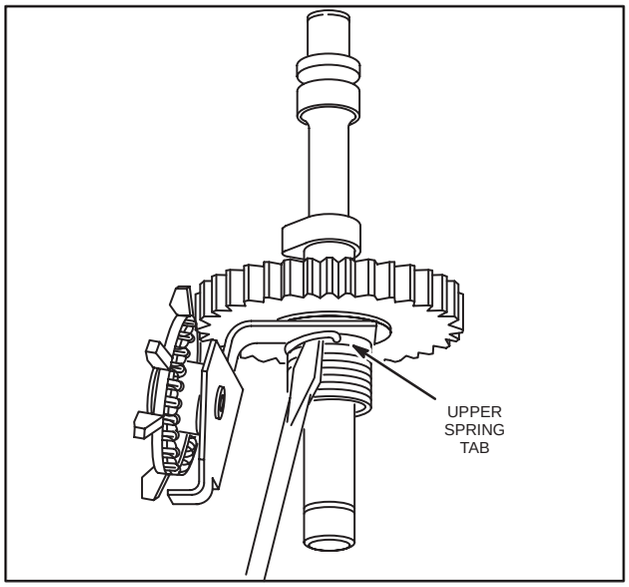

Fig. 160 – REMOVE CLUTCH SPRING

To Inspect Parts

Inspect for worn, broken or burred parts. Replace as required.

To Assemble Cam Gear – Current Design

1. Assemble clutch spring as shown in Fig. 161.
2. Align hole in clutch sleeve with tab or spring and slide on.
3. Depress spring tab, if required. When clutch sleeve is in place, spring tab should be in sleeve hole, Fig. 162.

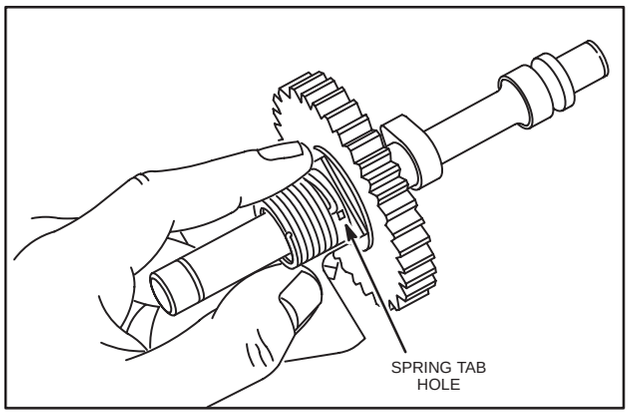

Fig. 161 – ASSEMBLE CLUTCH SPRING

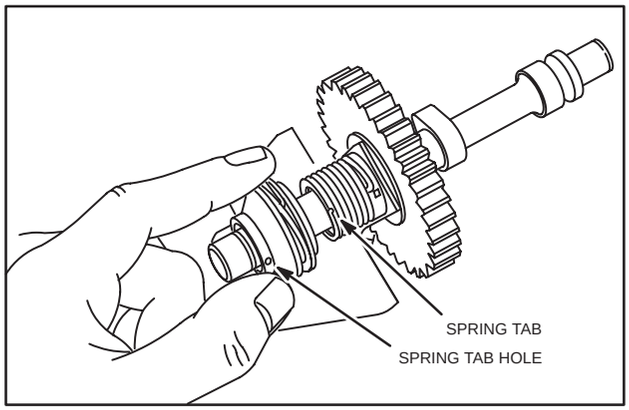

Fig. 162 – INSTALL CLUTCH SLEEVE

4. Slide thin thrust washer and worm on cam gear. Slide in thick thrust washer.
5. Slide on copper washer with gray coated side toward thrust washer.
6. Install "E" ring and check worm gear end play as described in "Check Cam Gear," this section, page 15. Inspect cam gear assembly as outlined in "Inspect Clutch Operation" this section, page 14.

To Remove Control Lever Shaft

1. Remove "E" ring, Fig. 163.
2. Slide control lever and shaft out slowly until lever clears boss on sump.
3. Slowly release spring tension and then remove shaft, spring and "O"-ring seal.
4. Inspect shaft assembly for loose lever, worn or broken parts. Replace as needed.

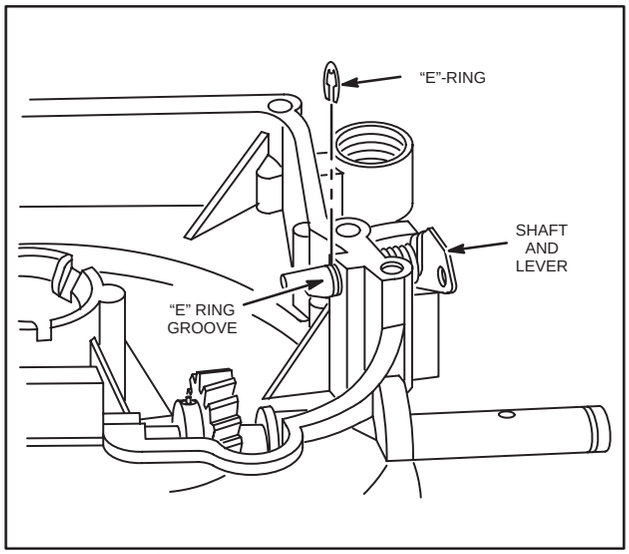

Fig. 163 – REMOVE "E" RING

SPECIAL INSTRUCTIONS, (cont'd)

To Assemble Control Lever and Shaft Assembly

1. Install return spring on shaft and lever assembly as shown in Fig. 164.

2. Then install "O"-ring seal on shaft.

3. Lubricate "O"-ring and shaft lightly with engine oil.

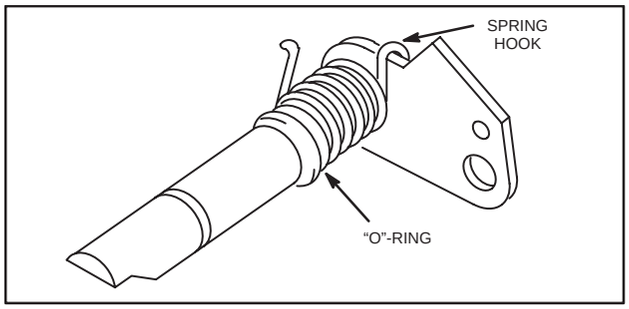

Fig. 164 – ASSEMBLE SPRING

4. Slide control lever assembly into shaft bore, Fig. 165, as far as it will go.

5. Rotate lever clockwise to put tension on return spring.

6. When lever clears stop boss, push lever and spring in until lever stops.

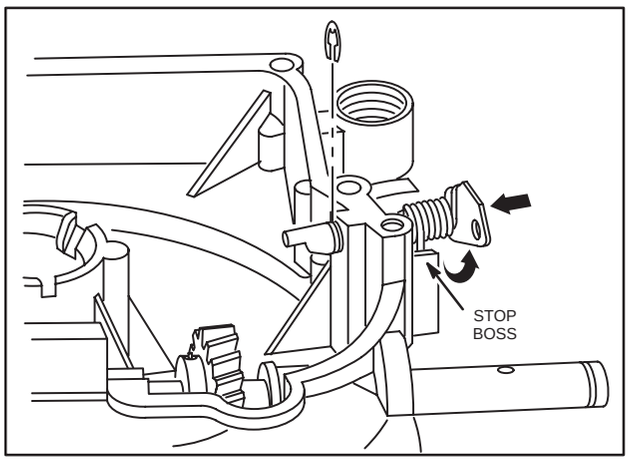

Fig. 165 – LEVER INSTALLATION

7. Install "E" ring. Leg of spring may need to be pushed against sump, Fig. 166.

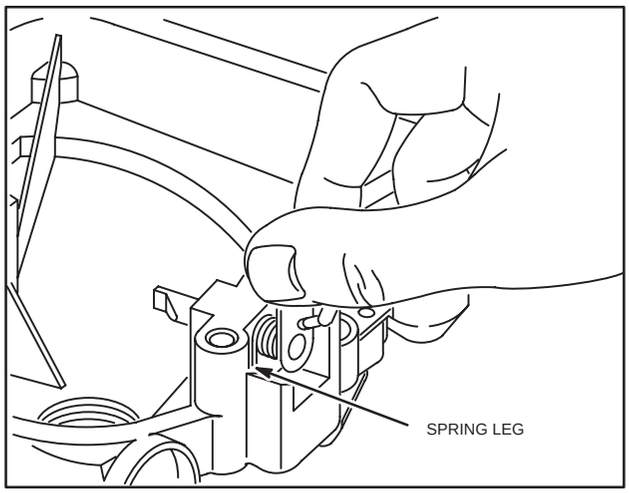

Fig. 166 – SPRING INSTALLATION

To Install Cylinder Clip Washer

Should clip washer in cylinder require replacing, be sure flat on clip washer is in line with flat on cam bearing boss and spring tabs are on both sides of cam bearing web, Fig. 167.

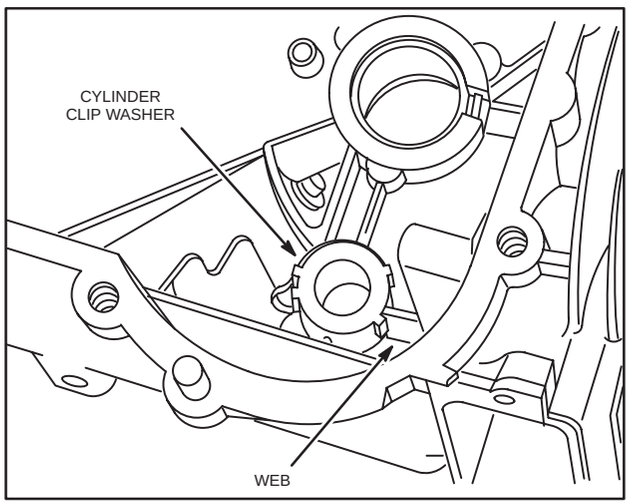

Fig. 167 – CYLINDER CLIP WASHER

SPECIAL INSTRUCTIONS, (cont'd)

Model "WMG" Generator

IF ARMATURE IS RUBBING ON FIELD POLES, align the engine base as follows:

Drain oil from engine. Turn complete unit upside down and support generator end with block as shown in Fig. 168.

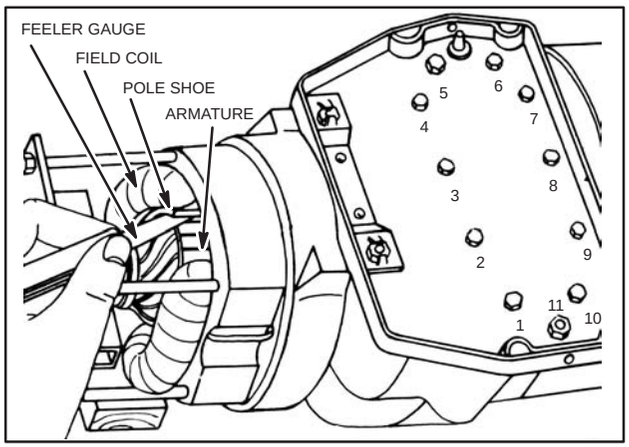

Fig. 168 – ALIGNING MODEL "WMG" GENERATOR

Loosen cap screws 1 to 11. Tighten No. 6 (shoulder screw) just enough to hold the base in the adjustment you are about to make. Shift base until armature is centered in the field coil without touching at any point. Use a feeler gauge to get uniform clearance at pole shoes. Now tighten carefully, first at No. 6, then at No. 11 (dowel pin nut). Recheck to be sure you have armature and field coil separated by uniform clearance. If clearance is O.K. tighten all bolts from 1 to 11. Refill with oil and test.

To Align and Dowel

IF ENGINE IS AN EARLY MODEL (WITHOUT DOWEL PIN) place unit as explained in preceding article.

Loosen cap screws 1 to 10 and remove screws 1, 6, and 10. Replace No. 6 cap screw with new shoulder screw, Part #63918 (NLA), then install new dowel pin, Part #63919 (NLA), at No. 11 after doing the following: Spread a divider to 1-3/16", Fig. 169. With divider point at the farther side first of No. 1 hole, scratch two (2) arcs to intersect as shown in Fig. 169, at No. 11. Prick punch at intersection of arcs and drill a 11/32" hole through the base for No. 11 hole.

Now insert dowel pin, Part #63919 (NLA), into cylinder casting hole with threaded end of pin through bottom of base, and tighten lightly with lockwasher, Part #90366, and Nut, Part #91208 (NLA). Proceed with aligning as explained in preceding paragraph.

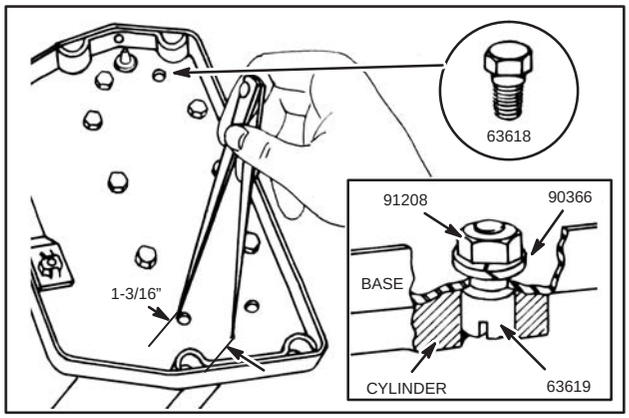

Fig. 169 – ALIGNING MODEL "WMG" GENERATOR

OIL RETURN VALVES

An oil leak at the main bearing can usually be corrected by cleaning or replacing oil return valve. The oil return valve is under the bearing in the cylinder and magneto plate. On late model engines the valve is threaded and screwed into place. Earlier models were equipped with cast in type valves as shown Fig. 170, Ill. 1, and should be replaced with new type, Part #69992 (NLA), shown in Fig. 170, Ill. 2. To remove old style oil return valve, place magneto plate with armature down on a box to support the outer edges. Place end mill tool, Tool #69054-T4 (NLA) in drill press and remove entire old oil return valve. In assembling oil return valve, Part #69992 (NLA), be sure the slot of the disc is placed toward the bottom of the engine.

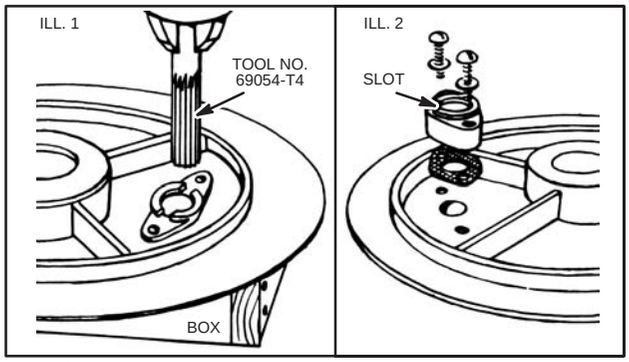

Fig. 170 – REPLACING OIL RETURN VALVE

SPECIAL INSTRUCTIONS, (cont'd)

BREATHERS – ALPHA-NUMERIC & NUMERIC ALPHA MODEL SERIES

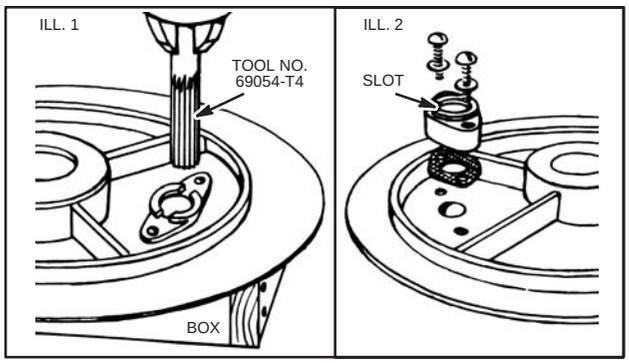

Fig. 171 – REPLACING OIL RETURN VALVE

The purpose of the breather is to relieve crankcase pressure and it is important that they be clean to assure proper operation. Some breathers are located inside the valve chamber, Fig. 174. Others are either pressed or screwed into the crankcase, Fig 172.

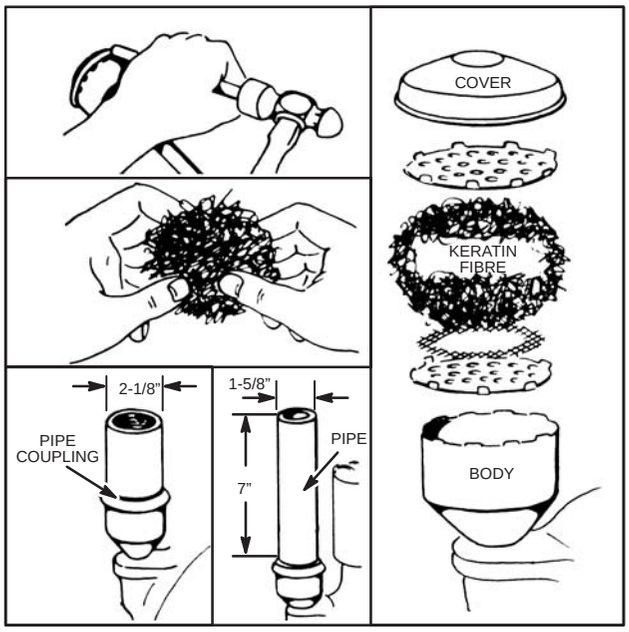

Fig. 172 – OUTSIDE BREATHERS

To Clean Breather Outside Type

Remove the breather cover with a punch and hammer as shown in Fig. 173. Remove screen and moss.

Clean all parts thoroughly except moss. Discard old moss. For breather with 1-5/8" dia. body, replace moss with Keratin Fibre, Part #27115 (NLA). For breathers with 2-1/8" dia. body, replace moss with Keratin Fibre, Part #27116 (NLA). Pull Fibre apart enough to remove lumps and prevent it from packing too tightly. Reassemble fibre and retainers as shown in Fig. 172.

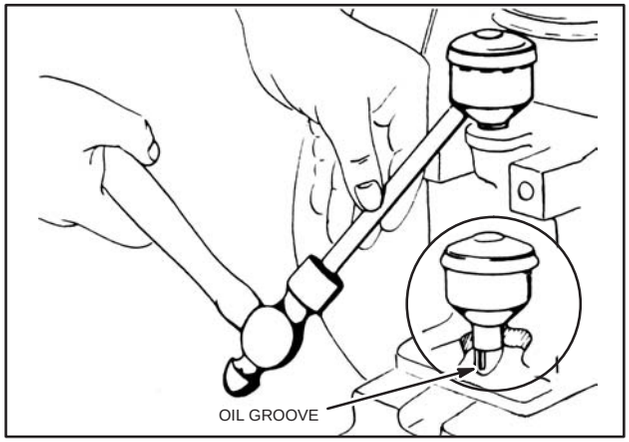

Fig. 173 – REMOVING BREATHER

On covers measuring 2-1/8" use a 1-1/4" or 1-1/2" pipe coupling.

On covers measuring 1-5/8" use a 1-1/4" pipe about 7" long. Tap end of pipe or coupling until cover is properly seated on breather body. Do not drive cover with a hammer or other flat surface tool as this is liable to dent cover and prevent proper fit.

NOTE: Late Models A, B, ZZ, 9, 14, and 23 engines have a breather with a sucker valve in the breather body. The fibre should be cleaned as shown in other breathers. The valve, however, cannot be repaired and if it does not operate properly the breather should be replaced. Refer to Parts Manual for correct breather part number.

To Replace Breather and Spray Shield Inside Type

Remove and reassemble the parts in the sequence shown in Fig. 174. If the body has two grooves on the under side, the groove should be parallel to the face of the valve chamber. If one (1) groove, the groove should point toward the front of valve cover housing at an angle of 45°. If the body has no groove, it can be assembled either way. The spray shield should be assembled about 1/16" from the face of the valve chamber and as close to the bottom of the chamber as the hole in the shield will allow.

SPECIAL INSTRUCTIONS, (cont'd)

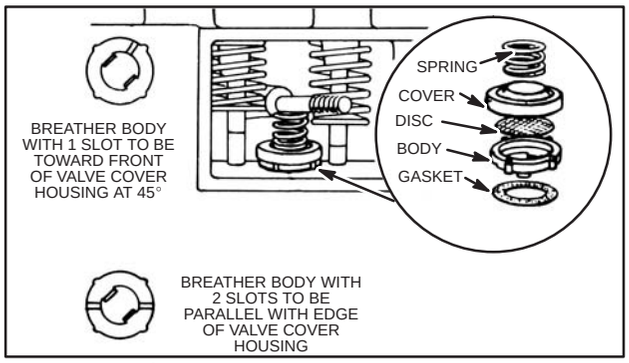

Fig. 174 – BREATHER VALVE

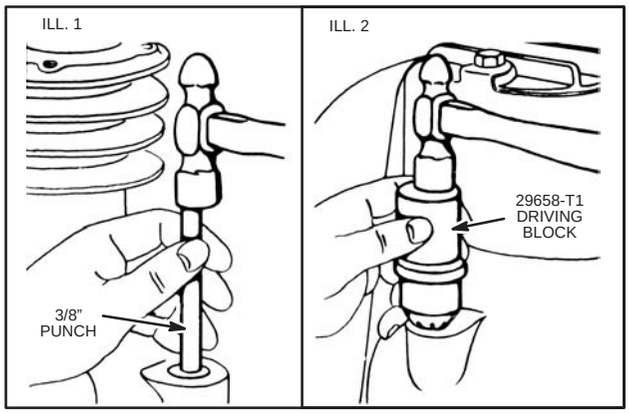

Fig. 176 – REPLACING BREATHER

To Replace Breather Outside Type

Many of the breathers are threaded and can be removed and assembled with a flat wrench. Others are pressed into place and can be removed as follows:

Remove fuel tank and bracket and use a punch or rod to drive the breather up and out of cylinder, Fig. 175.

When assembling new breather, apply a coat of shellac to breather mounting sleeve. Insert breather in hole in cylinder and drive it into place using Driving Block, Tool #69751-T1 (NLA), Fig. 176, Ill. 2. Be careful not to plug oil return groove in breather sleeve when applying shellac. On Models WM, WMB if the breather body breaks away from the breather sleeve, drive the sleeve down into crankcase with a 3/8" punch, Fig. 176, Ill. 1.

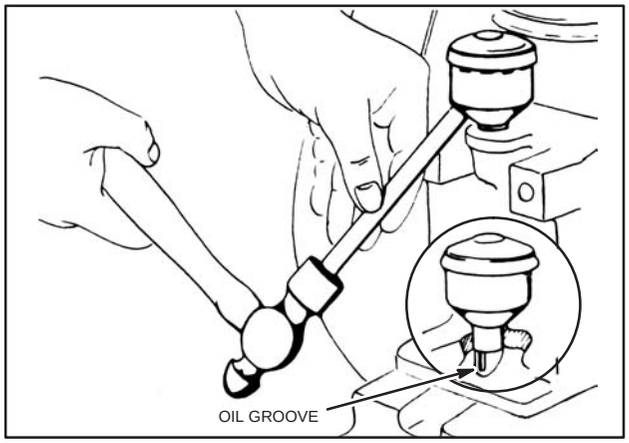

Fig. 175 – REMOVING BREATHER

BREATHERS – NUMERIC MODEL SERIES

It is the breather's function to maintain a vacuum in the crankcase. The breather has a fiber disc valve, which limits the direction of air flow caused by the piston moving back and forth. Air can flow out of the crankcase, but the one way valve blocks the return flow, thus maintaining a vacuum in the crankcase.

A partial vacuum must be maintained in the crankcase to prevent oil from being forced out of engine, at the piston rings, oil seals, breaker plunger (if so equipped) and gaskets.

Checking Breathers

If the fiber disc valve is stuck or binding, the breather cannot function properly and must be replaced. A .045" (1.14 mm) wire gauge should not enter the space between the fiber disc valve and body. (A spark plug wire gauge may be used.) Check as shown in Fig. 177.

NOTE: The fiber disc valve is held in place by an internal bracket which will be distorted if pressure is applied to the fiber disc valve. Therefore, do not apply force when checking with wire gauge.

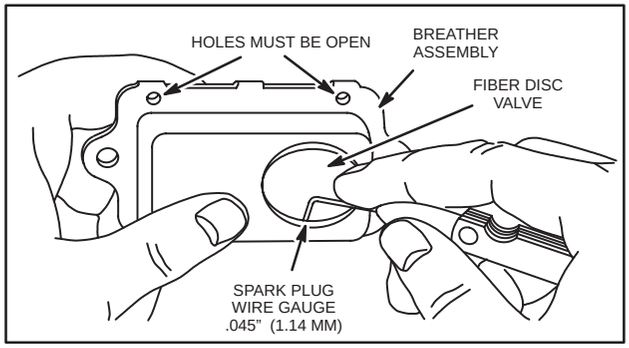

Fig. 177 – CHECKING BREATHER

SPECIAL INSTRUCTIONS, (cont'd)

If breather is removed for inspection, or valve repair, a new gasket should be used when replacing breather. Tighten screws securely to prevent oil leakage.

Most breathers are now vented through the air cleaner, to prevent dirt from entering the crankcase. Check to be sure venting elbows or tube are not damaged and seal properly.

Various breather assemblies are illustrated in Fig. 178.

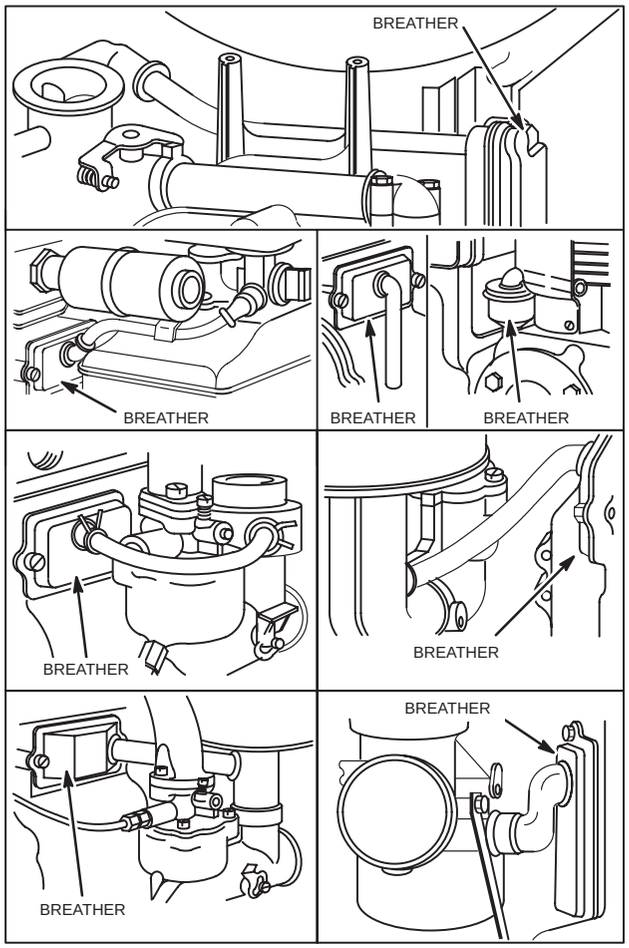

Fig. 178 – BREATHER ASSEMBLIES

CHANGE OIL SYSTEM

Models WM, WMG, PCWM

Each and every one of the above models sent to you for repair or adjustment must be changed from the pump type to splash type oiling system as outlined in the following procedure:

Model WM

Drain oil; remove engine base plate. Use 7/16" socket.

Model WMG

Drain oil; remove generator assembly from engine base. Use 1/2" open end wrench to take off generator mounting screws. Remove base plate from engine (use same tools as for Model WM). DO NOT loosen base plate dowel nut which keeps engine and generator in alignment.

Model PCWM

Drain oil; remove gas tank from engine. Use 1/2 and 5/8" open end wrenches. Remove base from engine, same as Model WM.

Inspect lower bearing of connecting rod, and if in good shape reassemble rod. DISCARD FILLISTER HEAD CONNECTING ROD SCREW LOCATED NEAREST CARBURETOR SIDE OF ENGINE and install in its place Special Dipper Screw, Part #91942 (NLA), and draw up both screws tight, Fig. 179.

If lower rod bearing is scored, discard rod and install new connecting rod, Part #29733 (NLA), with assembly marks on rod and X on piston boss toward magneto side of engine. See that tangs of the connecting rod screw locking plates are in slots. Bend Locking plates against hexagon heads with a pair of pliers, Fig. 179.

Install new base plate, Part #62904 (NLA) on Models WM or PCWM and Part #62974 (NLA) on Model WMG.

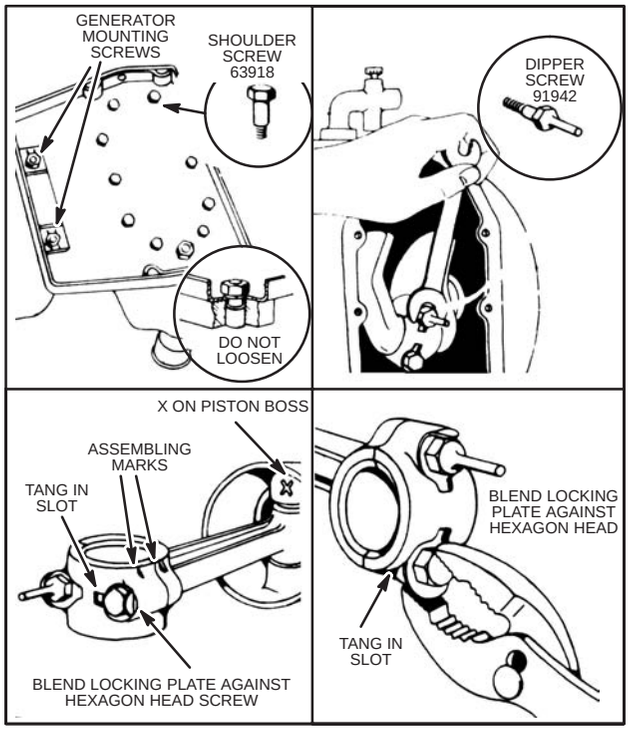

Fig. 179 – CHANGING OIL SYSTEM

SPECIAL INSTRUCTIONS, (cont'd)

CHANGE OIL PUMP

Models I, IBP, WI, WMI

The oil pump of each and every Briggs & Stratton Engine Models listed above sent to you for repair or adjustment must be examined and all old pumps replaced by part #99955 (NLA) as outlined in the following procedure:

Drain Oil; Remove engine base. Remove oil pump from base.

Use 7/16" socket wrench.

To check whether oil pump is old or new style, blow oil out of screen, but *do not remove screen.*

The old style oil pump had a staked in seat as indicated in Fig. 180 and must be replaced by the new style pump which can be identified by the cast in seat as shown in Fig. 180.

When assembling new pump to base be sure to install pump plunger and spring from old pump.

This replacement is to be made on a warranty basis, regardless of the condition of the old pump, Fig. 180.

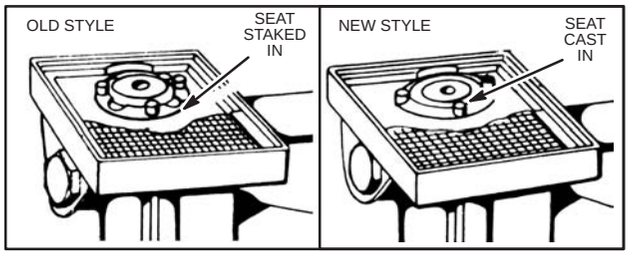

Fig. 180 – CHANGING OIL PUMP

LUBRICATION SYSTEMS

Splash Lubrication, Oil Dipper

Aluminum Alloy and Cast Iron Engines

In the oil dipper splash system, the dipper dips into oil reservoir in base of engine, splashing oil on all moving parts. There is no pump nor moving parts. Install connecting rod and dipper by engine model series as shown in Fig. 656.

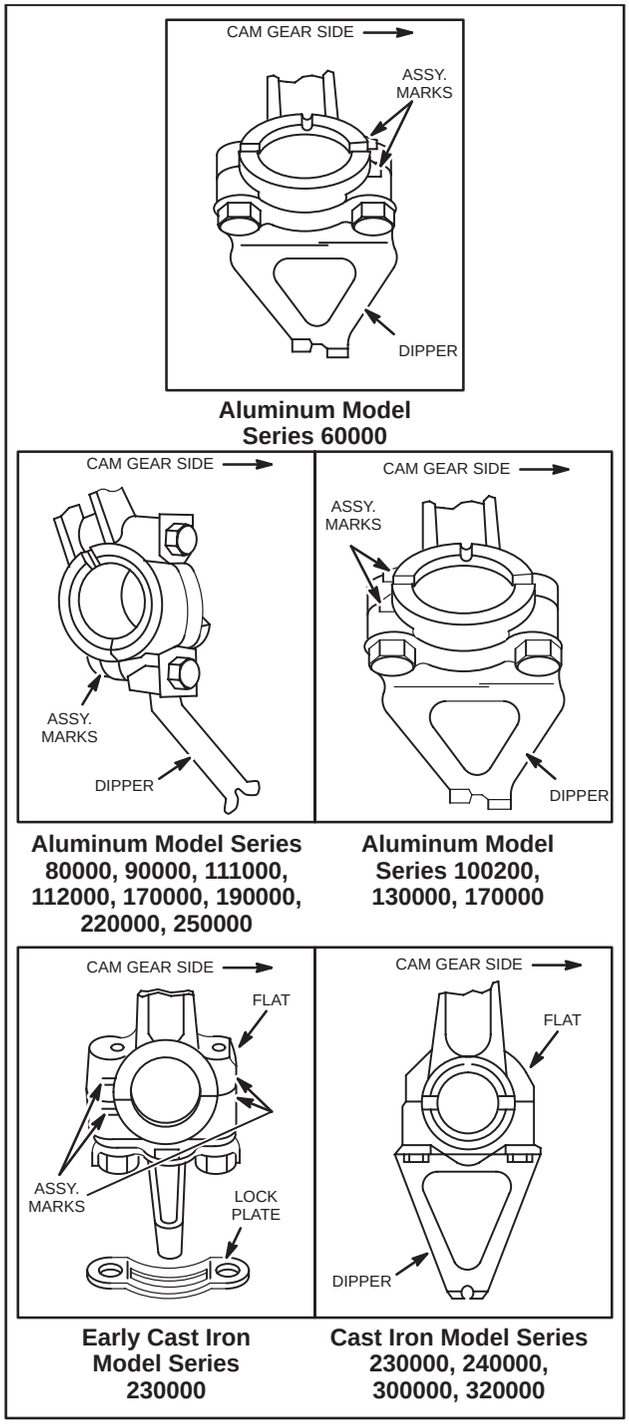

Fig. 181 – CONNECTING ROD INSTALLATION, HORIZONTAL CRANKSHAFT ENGINES

SPECIAL INSTRUCTIONS, (cont'd)

SYNCHRO-BALANCE®

Operation

Briggs & Stratton uses two methods of internally balancing engines.

One system uses counterweights that are driven to rotate in a direction opposite (180°) from the crankshaft counterweights, Fig. 182. The other system uses a counterweight that oscillates opposite to the direction of the piston. Each system performs the same function of substantially reducing engine vibration, thereby giving exceptionally smooth engine performance.

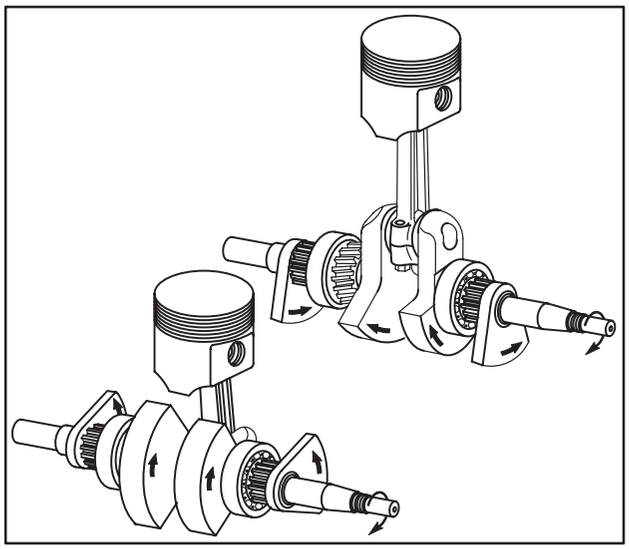

Fig. 182 – CAST IRON ENGINES, COUNTERBALANCE

ASSEMBLE AND TIME ROTATING SYNCHRO-BALANCE®, HORIZONTAL CRANKSHAFT CAST IRON ENGINES

WARNING: On some Model Series 326400 engines, the Synchro-Balance® cover did not have the balance gear and bearing. **DO NOT ATTEMPT TO START THESE ENGINES** until reinstalled in the equipment to prevent kick-back when starting.

1. Remove all traces of oil or dirt from tapered surfaces of drive gears and camshaft before assembling gears to camshaft.

2. Rotate crankshaft until piston is at top dead center.

3. Remove 5–1/2" (140 mm) long cam gear shaft bolt.

4. Place magneto end timing gear on cam gear taper.

5. Install bolt with Belleville washer, finger tight, Fig. 183.

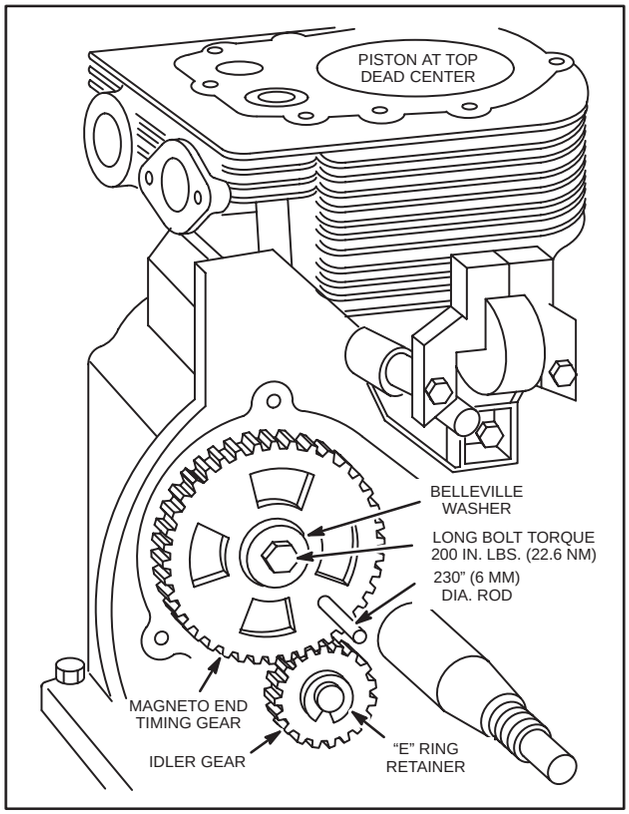

Fig. 183 – INSTALLING AND TIMING MAGNETO DRIVE GEAR

NOTE: On Model Series 300400 and 320400 only, place PTO end timing gear on the other end of camshaft. Install short cam gear bolt with Belleville washer, finger tight, Fig. 184.

6. To time drive gears, insert short pieces of 1/4" (6 mm) rod through 1/4" (6 mm) holes in drive gears, and into locating holes in crankshaft bearing support plates, Fig. 183.

SPECIAL INSTRUCTIONS, (cont'd)

NOTE: For Model Series 300400 and 320400 also see Fig. 184.

7. With piston at exactly TOP DEAD CENTER, torque drive gear bolt(s) (with 1/4" (6 mm) rods in place) to 200 in. lbs. (22.6 Nm). Be certain piston does not move.

8. Remove the 1/4" (6 mm) rods.

9. Install idler gear(s).

10. Install snap in "E" rings to retain gears. No further timing is necessary, Fig's. 183 and 184.

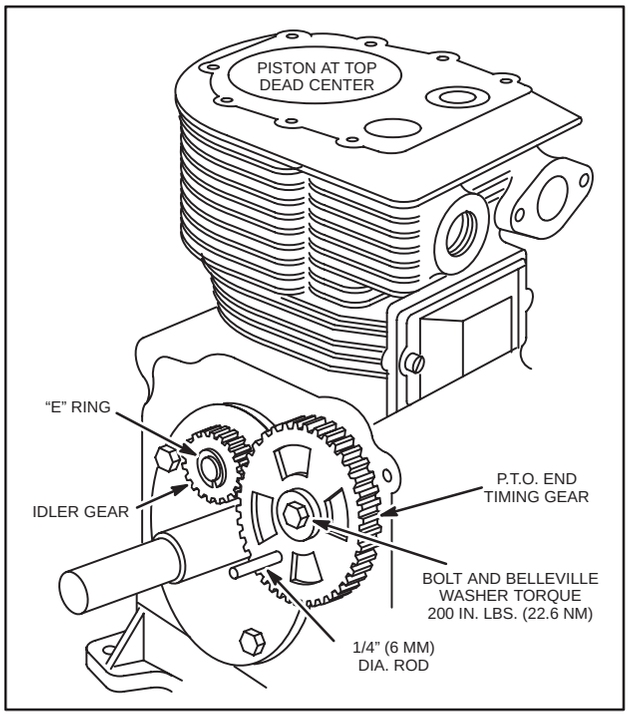

Fig. 184 – INSTALLING AND TIMING PTO DRIVE GEAR

The counterweights and ball bearings are an integral part of the covers and cannot be serviced. Lubricate ball bearings and gears with a few drops of engine oil.

NOTE: Piston must be at top dead center.

Time Counterweight

1. Remove the timing hole screw from cover assembly, Fig. 185.

2. Insert a short piece of 1/8" (3 mm) rod through timing hole in cover and into machining hole in counterweight, Fig. 185. The rod holds the counterweight in the proper position while cover is installed on engine.

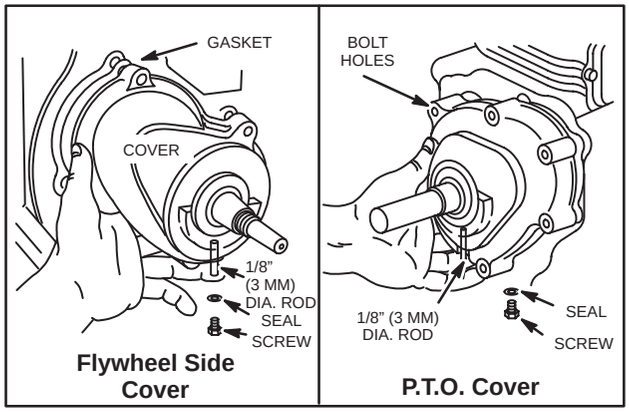

Fig. 185 – REMOVING TIMING HOLE SCREW

3. Install cover assembly and gasket, using seal protector to avoid damage to oil seal. Make sure that bolt holes line up with tapped holes in cylinder.

4. To minimize gear backlash, push magneto side cover toward idler gear and torque bolts to 120 in. lbs. (13.6 Nm).

NOTE: For Model Series 300400 and 320400 repeat above for PTO cover, torquing bolts to 200 in. lbs.(22.6 Nm).

5. Remove timing rods or screws.

6. Coat threads of timing hole screws with a non-hardening sealant such as Permatex® II, then install screw and fiber sealing washer.

SPECIAL INSTRUCTIONS, (cont'd)

ROTATING COUNTERBALANCE HORIZONTAL CRANKSHAFT MODEL SERIES 250000

This Model Series utilize two gear driven counterweights in constant mesh with the crankshaft gear.

The cut-away view illustrates these gears, mounted in the crankcase cover. The Synchro-Balance® counterweights rotate in opposite direction to crankshaft rotation, Fig. 186.

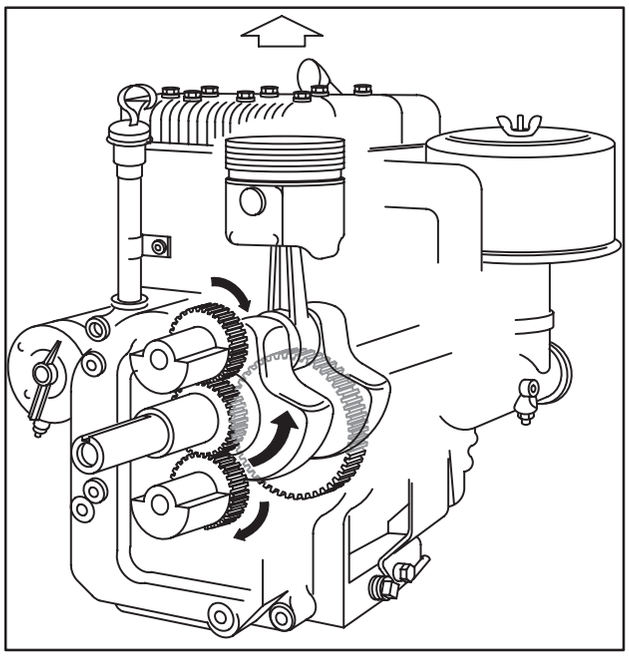

Fig. 186 – ALUMINUM ENGINES, ROTATING COUNTERBALANCE SYSTEM

The gear driven counterweights must be properly aligned when cover is installed.

If counterweights are removed from crankcase cover, exercise care in handling or cleaning to prevent loss of needle bearings.

Assemble Counterweights

1. Install counterweights on shafts in crankcase cover.

2. Install counterweight retainers and torque screws to 50 in.lbs. (5.6 Nm).

Time Counterweights Gears

1. Remove two small screws from cover and insert 1/8" (3 mm) diameter locating pins or breather screws and extended dipstick tube screw through screw hole and into timing hole provided in counterweights, Fig. 187.

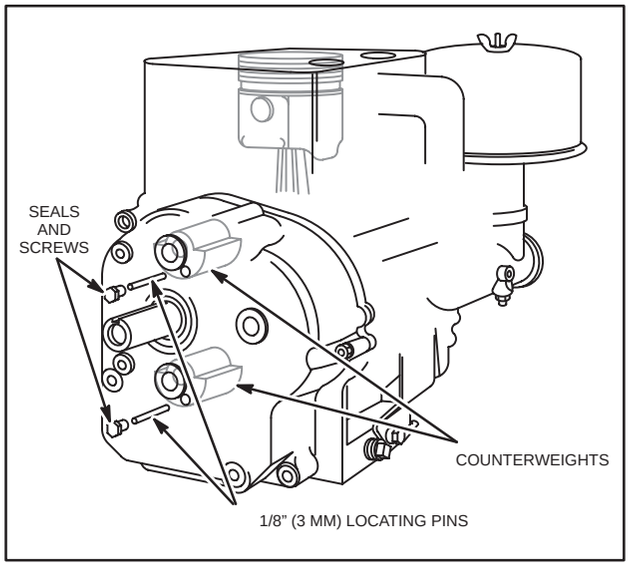

Fig. 187 – TIMING COUNTERBALANCE GEARS

2. With piston at TOP DEAD CENTER, install the crankcase cover assembly and cover gasket.

3. Remove the locating pins or screws.

4. Coat threads of timing hole screws with a non-hardening sealant such as Permatex® II, then install screws and fiber sealing washers.

OSCILLATING COUNTERBALANCE SYSTEM VERTICAL CRANKSHAFT

Disassemble Oscillating Counterbalance System

1. Remove sump.

2. Open connecting rod lock (when used) and remove connecting rod screws.

3. Remove connecting rod and piston from engine.

4. Remove crankshaft and counterweight assembly.

SPECIAL INSTRUCTIONS, (cont'd)

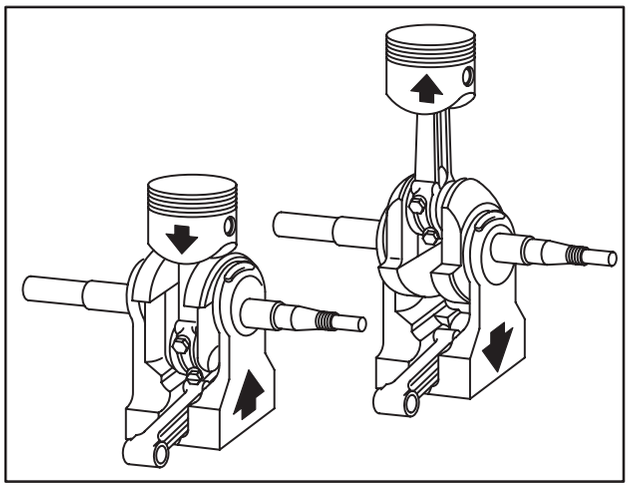

Fig. 188 – OSCILLATING COUNTERBALANCE

5. Remove crankshaft gear. If gear is tight, pry gear off with two screwdrivers. Do not to damage gear.

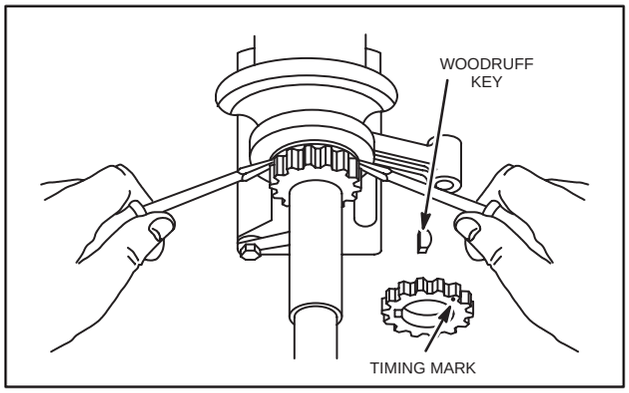

Fig. 189 – REMOVING CRANKSHAFT GEAR

NOTE: Save timing gear key on Model Series 171700. On current production Model Series 252700, 253700, 255700, 256700, and all 280000 engines the woodruff key can be removed, if required, Fig. 189.

6. Open lock (when used) and remove screw(s) from counterweight.

7. Remove PTO side weight, dowel pin(s), link and spacer(s) (when used).

8. Remove crankshaft from magneto side counterweight, Fig. 190.

NOTE: Newer assemblies contain only one screw, one dowel pin and are not equipped with spacers and lock.

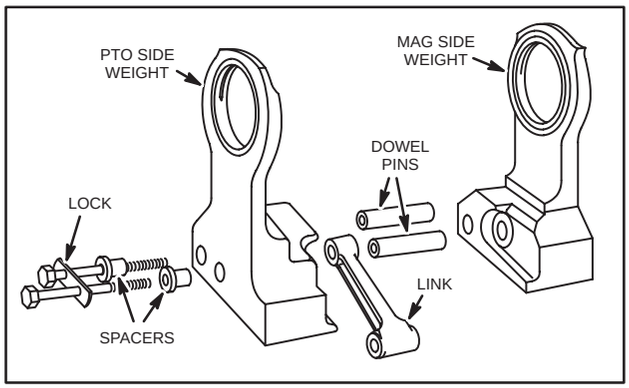

Fig. 190 – DISASSEMBLING COUNTERWEIGHT

Inspect Counterbalance System

Check counterweight bearings and crankshaft eccentrics for wear as listed in Table No. 11, Page 27.

If counterweight bearings are discolored, scored or worn to reject, the counterweight assembly must be replaced as a set. If crankshaft eccentrics are discolored, scored or worn to reject, the crankshaft and eccentrics must be replaced as a set except on current production Model Series 252700, 253700, 255700, 256700 with woodruff keys. Only the eccentrics need to be replaced on models with woodruff keys.

Assemble Counterweight Assembly and Crankshaft

1. Assemble magneto side eccentric on crankshaft with chamfer toward crankpin. Make sure eccentric is seated against counterweight on crankshaft.

2. Slide flywheel side counterweight onto crankshaft, Fig. 191.

3. Place crankshaft and counterweight in a vise with soft vise jaws or shop rags to protect magneto journal.

4. Install dowel pin(s). Slip link over dowel pin with rounded edge of free end up, Fig. 191.

5. Slide PTO side counterweight onto dowel pin(s) and crankshaft eccentric.

6. Install screw(s), spacer(s) (when used) and lock (when used). On counterweights with one screw, torque screw to 115 in. lbs. (13.0 Nm). On counterweights with two screws, torque screws to 80 in. lbs. (5.6 Nm) and bend lock up against flat of screw.

SPECIAL INSTRUCTIONS, (cont'd)

NOTE: On counterweight assemblies using one screw, rotate crankshaft to check for binding. If binding exists, loosen screw and re-torque screw. Check again for freedom of rotation.

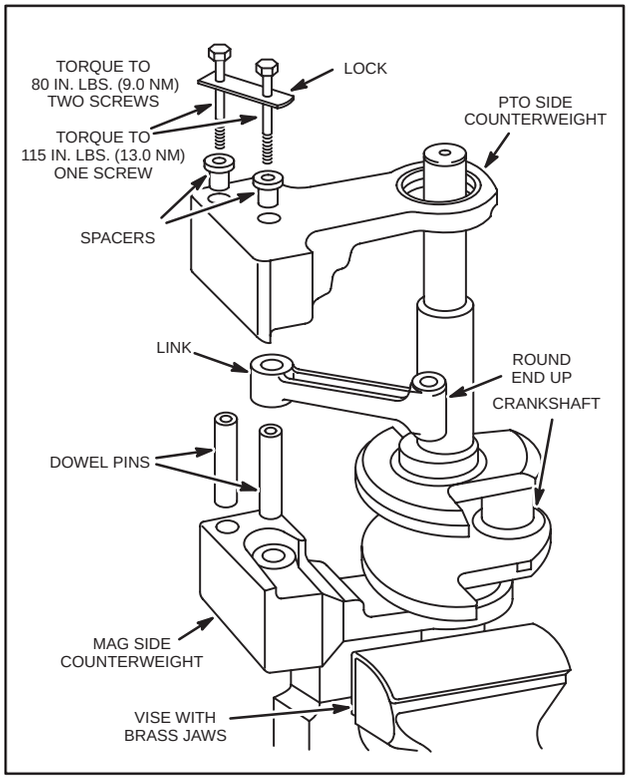

Fig. 191 – ASSEMBLING COUNTERWEIGHT TO CRANKSHAFT

7. If woodruff key was removed, install in crankshaft. Slide crankshaft gear onto crankshaft with chamfer toward eccentric. If gear is tight, lay gear on a light bulb to expand it before installing.

8. Lay cylinder on its side with cylinder head to the left. Use Seal Protector Kit, Tool #19334 or #19356 in magneto crankshaft seal.

9. Place crankshaft and counterweight assembly into cylinder and start magneto journal into magneto bearing.

10. Align link with crankcase link pin and push assembly into place, Fig. 192.

11. Install connecting rod and piston with lubrication hole in rod toward magneto side. This will expose rod assembly marks to view.

12. Assemble the cap screws and screw locks with dipper (Model Series 171700) toward cam gear side.

13. Torque screws and bend up locks. Proceed to install tappets, cam gear, etc., in usual manner, Section 10.

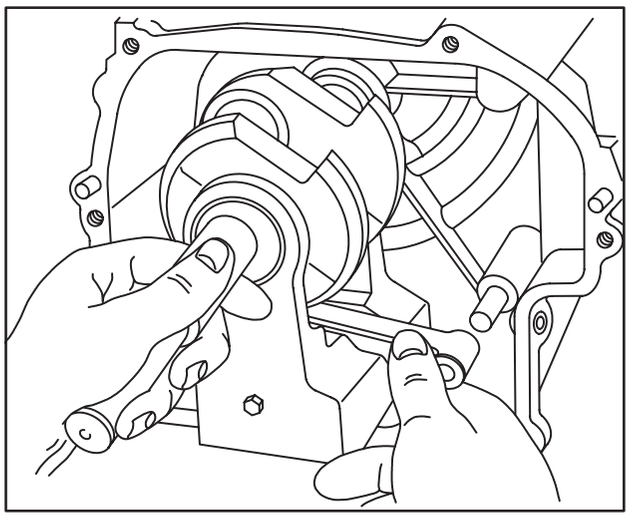

Fig. 192 – INSTALLING CRANKSHAFT AND COUNTERWEIGHT ASSEMBLY

Table No. 11

MODEL SERIES	ECCENTRIC	BEARING
170000, 190000	1.870" (47.51 MM)	1.881" (47.78 MM)
250000	2.120" (53.85 MM)	2.131" (54.13 MM)

SPECIAL INSTRUCTIONS, (cont'd)

NOTE: On counterweight assemblies using one screw, rotate crankshaft to check for binding. If binding exists, loosen screw and re-torque screw. Check again for freedom of rotation.

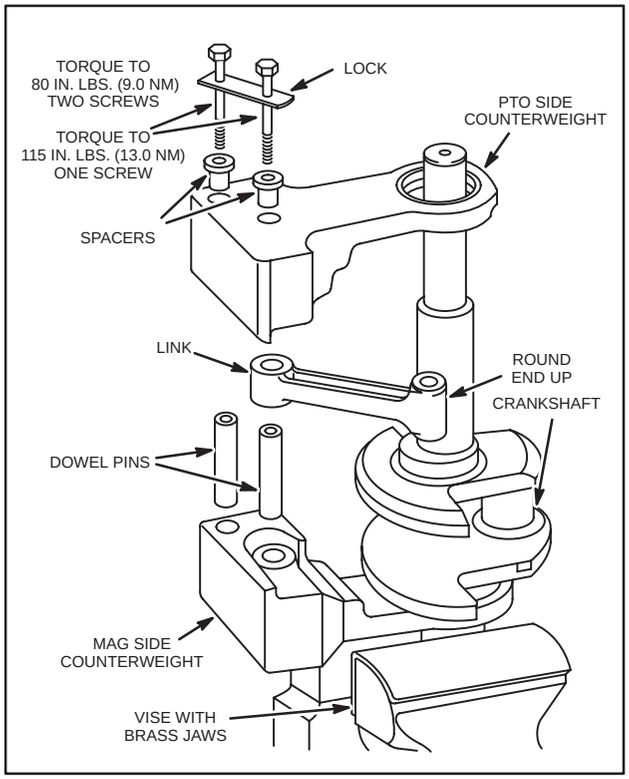

Fig. 191 – ASSEMBLING COUNTERWEIGHT TO CRANKSHAFT

7. If woodruff key was removed, install in crankshaft. Slide crankshaft gear onto crankshaft with chamfer toward eccentric. If gear is tight, lay gear on a light bulb to expand it before installing.

8. Lay cylinder on its side with cylinder head to the left. Use Seal Protector Kit, Tool #19334 or #19356 in magneto crankshaft seal.

9. Place crankshaft and counterweight assembly into cylinder and start magneto journal into magneto bearing.

10. Align link with crankcase link pin and push assembly into place, Fig. 192.

11. Install connecting rod and piston with lubrication hole in rod toward magneto side. This will expose rod assembly marks to view.

12. Assemble the cap screws and screw locks with dipper (Model Series 171700) toward cam gear side.

13. Torque screws and bend up locks. Proceed to install tappets, cam gear, etc., in usual manner, Section 10.

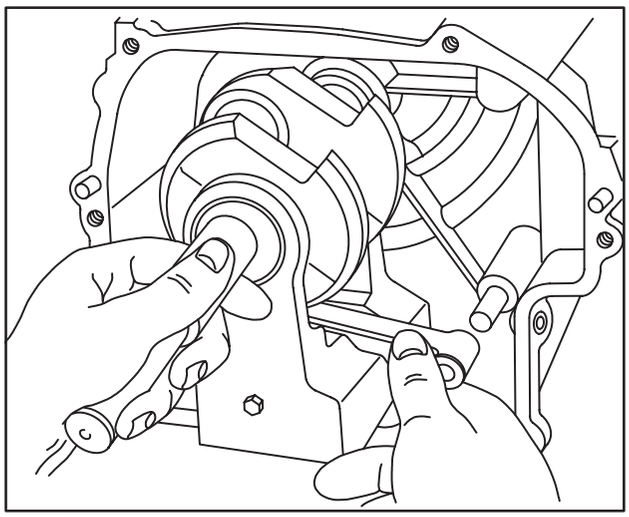

Fig. 192 – INSTALLING CRANKSHAFT AND COUNTERWEIGHT ASSEMBLY

Table No. 11

MODEL SERIES	ECCENTRIC	BEARING
170000, 190000	1.870" (47.51 MM)	1.881" (47.78 MM)
250000	2.120" (53.85 MM)	2.131" (54.13 MM)

Section 12
TOOLS

The following pages list the special tools used in repairing Briggs & Stratton engines.

List the tools by number and name, and tells what each is used for and on what engine models. Standard tools such as socket, open end wrenches, etc., however, are not listed.

If a tool in your tool kit is not marked with a part number, it may be identified by comparing it with the illustration and checking its size. Then refer to chart to determine its use

The plate number reference in last column refers to plates in Section 12 only – not to plates in prior chapters.

NOTE: Several sizes of bearing drivers and crankcase support jacks are listed which are not supplied by Briggs & Stratton. These can be made in your own shop.

Table No. 69 – BRIGGS & STRATTON MAJOR REPAIR TOOL LIST

PART NO.	DESCRIPTION	FUNCTION	USED ON MODELS	SEE PLATE
▼*MPJ	Timing Gauge	Set Cam Gear Timing	PB	12
▼MPJ–T4	Breaker Timer	Set Spark Timing	FH, FI, FJ, L, PB, Q, R, S, T, W	22
19368	Spark Tester	Test Spark	All Except 9, 14, 23	21
▼19111	Plug Gauge	Check Magneto Bearing	FH, FI, FJ, L, M, PB, Q, R, S, T, W	1
▼19112	End Play Gauge	Check End Play of Crankshaft	A, B, FH, FI, FJ, H, K, L, M, PB, R, S, T, W, Y, Z, ZZ	2
▼19113	Arbor	Hold Magneto plate in Lathe	FH, FI, FJ, L, M, PB, Q, R, S, T, W	4
▼13A18–T30	Line Reaming Fixture	Guide for Reaming Cam Gear Bearings	PB	12
19244	Clutch Wrench	Loosen or Tighten Kick Starter Ratchet	I, N, WI, 5, 6, 8	29
19115	Counterbore	Counterbore Hole for Valve Guide	N, NS, U, 6, 8	14
▼19116	Reamer	To Ream Hole for Valve Guide	N, NS, U, 6, 8	14
▼19147	Plug (part of 19143)	To Hold Connecting Rod to Check Alignment	23	7
19052	Flywheel Puller	Remove Flywheel	K, Z, ZZ	19
▼19118	Crankcase Support Jack	Strengthen Crankcase – Replacing Gov. Shaft	A, B, K, Z, ZZ	6
▼19119	Crankcase Support Jack	Strengthen Crankcase – Replacing Gov. Shaft	L, M	6
▼19120	Bushing Driver	Replace Drive Bearing	A, H, PB, Y	5
19053	Flywheel Puller	Remove Flywheel	A, B	19
▼19121	Crankcase Support Jack	Strengthen Crankcase – Replacing Gov. Crank Brg.	B	6
▼*29347–T1	Bushing Driver	Replace Drive Bearing	Q, R, W	5
19054	Flywheel Puller	Remove Flywheel	H, Y	19
▼29654	Feeler Gauge	Check Point Gap – Tappet Clearance, etc.	All Models	25

TOOLS (cont'd)

Table No. 69 – BRIGGS & STRATTON MAJOR REPAIR TOOL LIST (cont'd)				
PART NO.	DESCRIPTION	FUNCTION	USED ON MODELS	SEE PLATE
▼29658–T1	Breather Driver	Install Breather	FJ, I, IBP, WI, WM, WMB, WMI	27
19055	Plug Gauge	Check Plunger Hole	8 and All 2" Bore***	16
19056	Reamer	Ream Hole For Plunger Bushing	8 and All 2" Bore***	16
19057	Bushing Driver	Install Plunger Bushing	8 and All 2" Bore***	16
19058	Reamer	Ream Bushing for Plunger	8 and All 2" Bore***	16
▼29673–T11	Arbor	Hold Magneto Plate in Lathe	8 and All 2' Bore***	4
19122	Plug Gauge	Check Valve Guide	FH, FI, 8 and All 2" Bore***	18
▼19155	Drill	Mill Down Valve Guides	8 and All 2" Bore***	15
▼29746–T1–1	Drill Bushing	Guide for Drill 19155 (obs.)	8 and All 2" Bore***	15
19123	Crankcase Support Jack	Strengthen Crankcase – Replacing Drive Bearing	8 and All 2" Bore***	10
▼60079–T3–3	Pilot Guide	Driver for 60079–T3–2 Reamer	H, Y	9
▼60079–T3–11	Ball	Burnish Holes in Bushings	H, Y	9
▼60079–T3–12	Plunger	Bushing Driver – Replace Starter Bearings	H, Y	9
▼60079–T3–22	Cross Bar	Handle for 60079–T3–3 Pilot	H, Y	9
▼60079–T3–31	Bushing Support	Guide for 60079–T3–3 Pilot	H, Y	9
▼60079–T3–32	Nut	Feed Nut for 60079–T3–3 Pilot	H, Y	9
▼60144–T100	Drill Bushing	Guide for Drill	A, B, FJ, H, K, L, M, R, S T, W, Y, Z, ZZ	15
▼60144–T101	Drill	Mill Down Valve Guides	A, B, FJ, H, K, M, R, S, T, W, Y, Z, ZZ	15
▼19081	Bushing	Pilot Guide for Reaming Magneto Bearing	B, K	8
▼19082	Bushing	Pilot Guide for Reaming Drive Bearing	A, B, H, K, Y	8
▼19083	Shell Reamer	Ream Magneto Bearing	A, B, H, K, Y, Z, ZZ	8
▼19084	Shell Reamer	Ream Drive Bearing	B, K	8
▼19085	Pilot	Driver for all 60225–T1 Reamers		8
▼19086	Bushing	Pilot Guide for Reaming Magneto Bearing	B with Ball Bearing Drive	8
▼19087	Bushing	Pilot Guide for Reaming Magneto Bearing	Z, ZZ	8
▼19088	Bushing	Pilot Guide for Reaming Magneto Bearing	A, H, Y	8
▼19089	Shell Reamer	Ream Drive Bearing	A, H, Y	8
▼19090	Bushing	Pilot Guide for Reaming Magneto Bearing	A with Ball Bearing Drive	8
19094	Bushing	Pilot Guide for Reaming Magneto Bearing	8 and all 2" Bore ***	8
19095	Shell Reamer	Ream Magneto or Drive Bearing	8 and all 2" Bore ***	8
19096	Pilot	Driver for All 60732–T2 Reamers		8
19097	Bushing	Pilot Guide for Reaming Magneto Bearing	I, IBP, N with Ball Bearing Drive	8
▼19125	Reamer	Ream Hole for Flywheel Bolt	H, Y	26

TOOLS (cont'd)

Table No. 69 – BRIGGS & STRATTON MAJOR REPAIR TOOL LIST (cont'd)				
PART NO.	DESCRIPTION	FUNCTION	USED ON MODELS	SEE PLATE
▼61348–T1–3	Guide Puller	Remove Valve Guides	A, B, FJ, H, L, M, R, S, T, W, Y, Z, ZZ	17
19126	Expansion Pilot	Pilot Guide for Counterbore for Valve Seat	8 and all 2" Bore ***	18
19127	Expansion Pilot	Pilot Guide for Counterbore for Valve Seat	A, B, FJ, H, K, L, M, R, S, T, W, Y, Z, ZZ	18
▼19128	Counterbore	Drill Hole in Cylinders for Valve Guides	FJ, H, L, M, Q, R, S, T, W, Y with Non–removable guides	14
19129	Planer Shank	Driver for Counterbore No. 61348–T1–63, 73 & 83		18
19124	Bushing Driver	Replace Magneto or Drive Bearing	FH, FI, FJ, I, IBP, N, NS, S, T, U, WI, WM, WMB, WMI, 5, 6, 8	5
▼60079–T3–2	Shell Reamer	Ream Holes for Starter Shaft Bearings	H, Y	9
19130	T Handle	Handle for Planer Shank	61348–T1–43	18
19131	Counterbore Cutter	Counterbores Holes for Valve Seat Inserts	B, K, R, W, Z, ZZ, 14, 23	18
19132	Counterbore Cutter	Counterbores Holes for Valve Seat Inserts	A, FJ, H, L, M, S, T, Y, 9	18
19133	Counterbore Cutter	Counterbores Holes for Valve Seat Inserts	I, IBP, N, NS, U, WI, WM, WMB, WMI, 5, 6, 8	18
▼19134	Reamer	Use if 19128 (obs.) Cuts Undersized	FJ, H, L, M, Q, R, S, T, W, Y	14
19135	Knockout Pin	Remove Counterbore Cutters from Planer Shank		18
19136	Insert Driver	Drive in Valve Seat Inserts	All Models	18
19137	T Handle	Handle for Expansion Pilot 19126	All Models	18
▼61348–T1–15 2	Guide Puller	Use with 61348–T1–3 to remove Valve Guides	A, B, FJ, L, M, S, T, W, Z, ZZ	17
19064	Reamer	Ream Hole for Plunger Bushing	A, B, H, K, Y, Z, ZZ	16
19367	Bushing Driver	Install Plunger Bushing	A, B, H, K, Y, Z, ZZ	16
19066	Reamer	Ream Bushing For Plunger	A, B, H, K, Y, Z, ZZ	16
19067	Plug Gauge	Check Plunger Hole	A, B, H, K, Y, Z, ZZ	16
▼19150	Arbor	Hold Magneto Plate in Lathe	A, B, H, K, Y, Z, ZZ	4
19138	Valve Insert Puller Assembly	Pull Valve Seat Inserts	All Models	11
▼19117	Plug Gauge	Check Bushing in Crankcase or Bearing Support	9, 14, 23	24
19203	Flywheel Puller	Remove Flywheel	9, 14, 23	19

Items with Footnote markings may be in your tool kit. If so, use them as shown. If you do not have them follow directions below.

* Not Supplied. To be made. Necessary dimensions are given in the respective plates.

▲ No longer available. Use inside micrometer to check bearing. If it is larger than C end of gauge as shown in Plate 1, the bearing should be replaced.

▼ No longer available.

▼* See directions for timing in Tune-up Instructions.

▼** Make steel bushing as shown and use instead of three legged plate on Y type 4 hole mounting magnetos. Drill 1/4" hole in fixture to form slot for oil deflector.

*** 2" bore includes I, IBP, N, NS, U, WI, WM, WMB, WMI, 5, 6

TOOLS (cont'd)

291661 TOOL KIT (CONSISTS OF THE FOLLOWING TOOLS)		
PART NO.	**DESCRIPTION**	**MODELS USED ON**
19368	Spark Tester	All Models
19052	Wheel Puller	K, Z, ZZ
19053	Wheel Puller	A, B
19054	Wheel Puller	H, Y
29654	Feeler Gauge	All Models
29658–T1 (obs.)	Breather Driver	FJ, I, IBP, WI, WM, WMB, WMI
19055	Plug Gauge	8 and all 2" bore*
19056	Contact Plunger Hole Reamer	8 and all 2" bore*
19057	Bushing Driver	8 and all 2" bore
19058	Contact Plunger Bushing Reamer	8 and all 2" bore*
19059 (obs.)	Flywheel Holder	8 and all 2" bore*
19060	Ignition Wrench (2 in kit)	A, B, H, K, Y, Z, ZZ
63821 (obs.)	Allen Wrench	A, 8 and all 2" bore*
19061	Screw Driver	A, 8, 9 and all 2" bore*
19062	Screw Driver	B, K, ZZ, 14, 23
19063	Spring Compressor	All except 2" bore and 8*
69751–T1 (obs.)	Breather Driver	A, B, H, K, L, M Q, R, S, T, W, Y, Z, ZZ
19064	Contact Plunger Hole Reamer	A, B, H, K, Y, Z, ZZ
19274	Bushing Driver	A, B, H, K, Y, Z, ZZ
19066	Contact Plunger Bushing Reamer	A, B, H, K, Y, Z, ZZ
19067	Plug Gauge	A, B, H, K, Y, Z, ZZ
19203	Wheel Puller	9, 14, 23
19081 (obs.)	Bushing	B, K
19082 (obs.)	Bushing	A, B, H, K, Y
19083 (obs.)	Shell Reamer	A, B, H, K, Y, Z, ZZ
19084 (obs.)	Shell Reamer	B. K
19085 (obs.)	Pilot	
19086 (obs.)	Bushing	B with ball bearing drive
19088 (obs.)	Bushing	A, H, Y
19089 (obs.)	Shell Reamer	A, H, Y
19090 (obs.)	Bushing	A with ball bearing drive
19094	Bushing	8 and 2" bore*
19095	Shell Reamer	8 and 2" bore*
19096	Pilot	
19097	Bushing	8 and all 2" bore with ball bearing drive
19098 (obs.)	Bearing Plug Gauge	8 and all 2" bore*
19091 (obs.)	Bearing Plug Gauge	A, H, Y
19092 (obs.)	Bearing Plug Gauge	B, K
19093 (obs.)	Bearing Plug Gauge	A, B, H, K, Y, Z, ZZ
* 2" bore includes Models I, IBP, N, NS, U, WI, WM, WMB, WMI, 5, 6		

TOOLS (cont'd)

PLATE 1 PLUG GAUGES

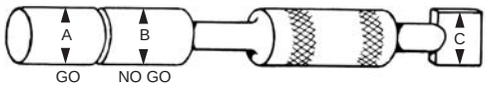

IF GAUGE DOES NOT HAVE "C" END, MEASURE WEAR WITH A MICROMETER

PART NO.	A	B	C
19111 (obs.)	.9700–.9698	.9707–.9705	.917–.9715
19098 (obs.)	.8764	.8770	.8780
19091 (obs.)	.9955–.9954	.9961–.9960	.9971–.9970
19092 (obs.)	1.1255–1.1254	1.1261–.1.1260	1.271–1.1270
67029–T2	.7500–.7498	.7507–.7505	.7517–.7515
19148 (obs.)	.8750–.8748	.8757–.8755	.8767–.8765
69265–T2	1.0000–.9998	1.0007–.1.0005	1.0017–1.0015
19093 (obs.)	1.955–1.0954	1.0961–.10960	1.0971–1.0970

PLATE 2 END PLAY GAUGE

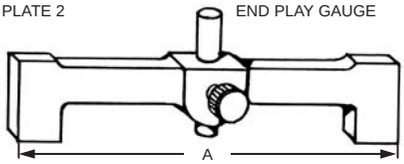

PART NO.	A
19112(obs.)	4–3/4"
19154(obs.)	4"

PLATE 3 LINE REAMERS

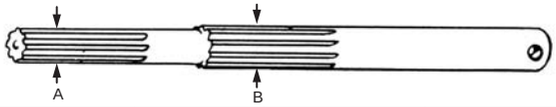

PART NO.	LENGTH	A	B
60079–T2	12–3/8"	1.0962–.1.0959	.9962–.9959
67029–T1	8–1/4"	.999–.997	.7505–.7502
19149 (obs.)	11–1/2"	.9705–.9703	.8755–.8753
69265–T1	11–1/16"	1.0005–1.0003	.9710–.9708

PLATE 4 ARBOR

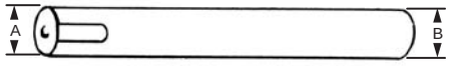

PART NO.	A	B
19113 (obs.)	.974	.969–.968
19150 (obs.)	1.099	1.093
29673–T11	.8795	.874

PLATE 5 BUSHING DRIVERS

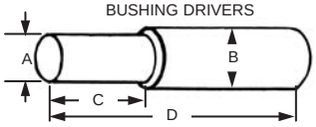

COLD FINISH STEEL

PART NO.	A	B	C	D
19120 (obs.)	.990–.985	1.110–1.100	3–3/4"	5–3/8"
29347–T1	1.125–1.120	1.25	1–1/2"	4"
19124	.860–.855	.971–.966	3–3/4"	5–1/2"
69093–T1	.860–.850	1.110–1.100	3–3/4"	5–13/32"
19152 (obs.)	1.073–1.068	1.215–1.210	1–7/16"	4

PLATE 6 CRANKCASE SUPPORTS

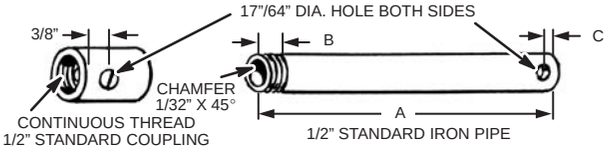

PART NO.	A	B	C
19118 (obs.)	3–1/4"	1–3/8"	7/8"
19119 (obs.)	5–7/8"	1–1/2"	1–1/2"
19121 (obs.)	7–1/16"	1–1/2"	1–1/2"
19153 (obs.)	8–1/8"	1–1/2"	1–1/2"

PLATE 7 PISTON & CONNECTING ROD SQUARENESS GAUGE

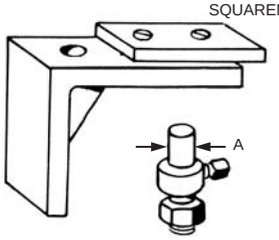

PART NO.	A
19144 (obs.)	.8750–.8748
19145 (obs.)	1.000–.9998
19146 (obs.)	.7509–.7507

PLATE 8 BEARING REAMERS

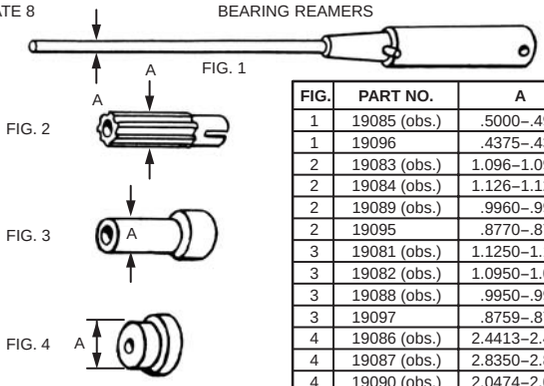

FIG.	PART NO.	A
1	19085 (obs.)	.5000–.4995
1	19096	.4375–.4370
2	19083 (obs.)	1.096–1.0955
2	19084 (obs.)	1.126–1.1255
2	19089 (obs.)	.9960–.9955
2	19095	.8770–.8768
3	19081 (obs.)	1.1250–1.1245
3	19082 (obs.)	1.0950–1.0945
3	19088 (obs.)	.9950–.9945
3	19097	.8759–.8754
4	19086 (obs.)	2.4413–2.4408
4	19087 (obs.)	2.8350–2.8345
4	19090 (obs.)	2.0474–2.0470
4	19097	1.8540–1.8500

PLATE 9 STARTER SHAFT BUSHING REAMER

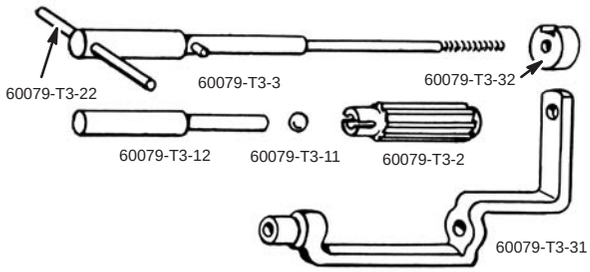

PLATE 10 29746-T2 CRANKCASE SUPPORT

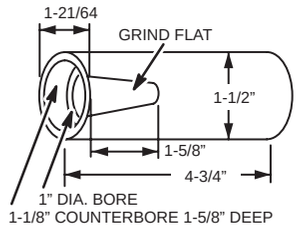

PLATE 11 290914 VALVE INSERT PULLER

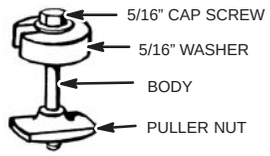

PLATE 12

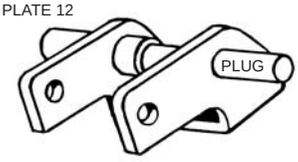

13A18-T30 LINE REAMING TOOL

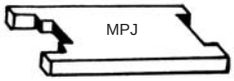

TIMING GAUGE

PLATE 13 69053-T1 ARMATURE TURNING FIXTURE

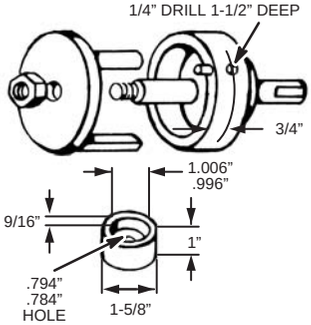

TOOLS (cont'd)

PLATE 14

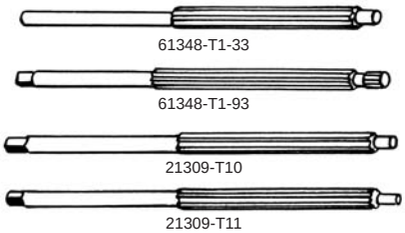

PLATE 15

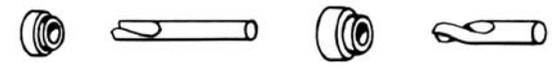

PLATE 16

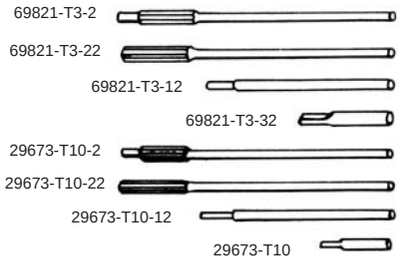

PLATE 17

PLATE 18

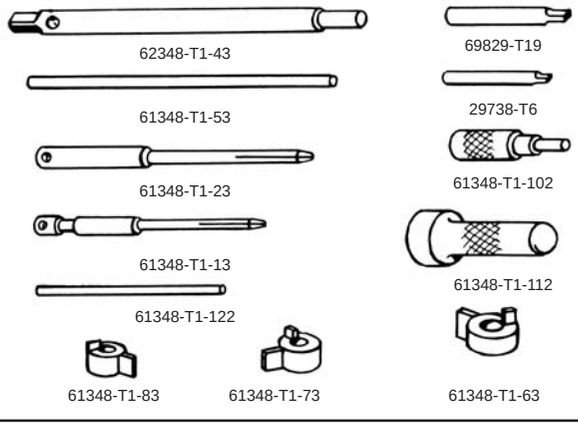

PLATE 19

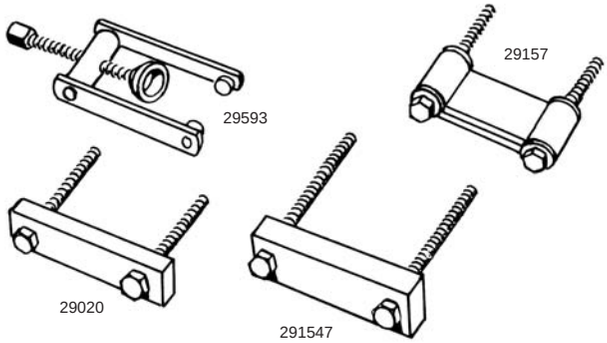

PLATE 20

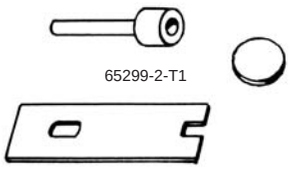

PLATE 21

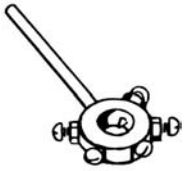

PLATE 22

PLATE 23

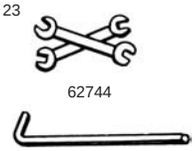

PLATE 24

PLATE 25

PLATE 26

PLATE 27

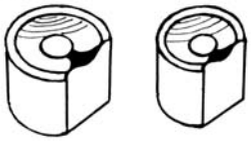

PLATE 28

PLATE 29

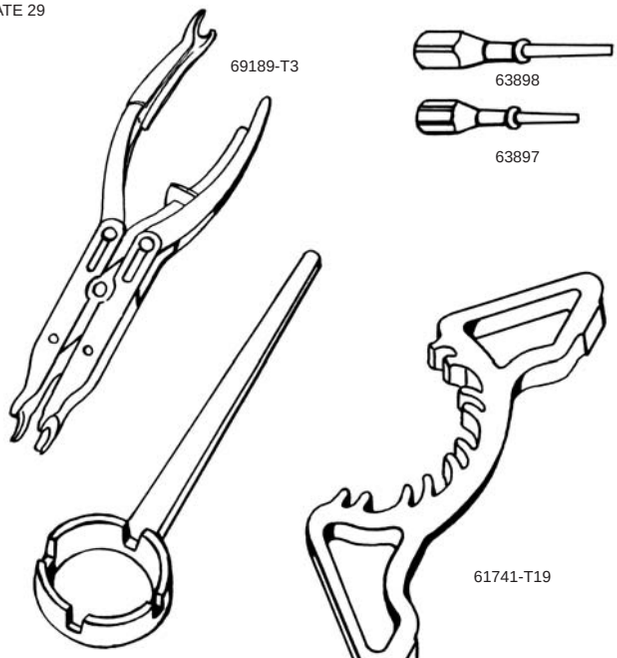

TOOLS (cont'd)

INSTRUCTIONS MAKING AND USING 27435 ENGINE MOUNTING BOARD USED FOR MAKING RUNNING-IN TEST ON BRIGGS & STRATTON ENGINES

1 – 2x12x24 Hardwood Plank. Top & Sides Finished. Holes Numbered 8, 9, 10, 11, 18, 19, 20, 212 are 5/16" dia. with Counterbore as shown. Holes numbered 1, 2, 3, 4, 5, 6, 7, 12, 13, 14, 15, 16, 17, 22, 23, 24, 25 are 3/8" dia. also Counterbored as shown.

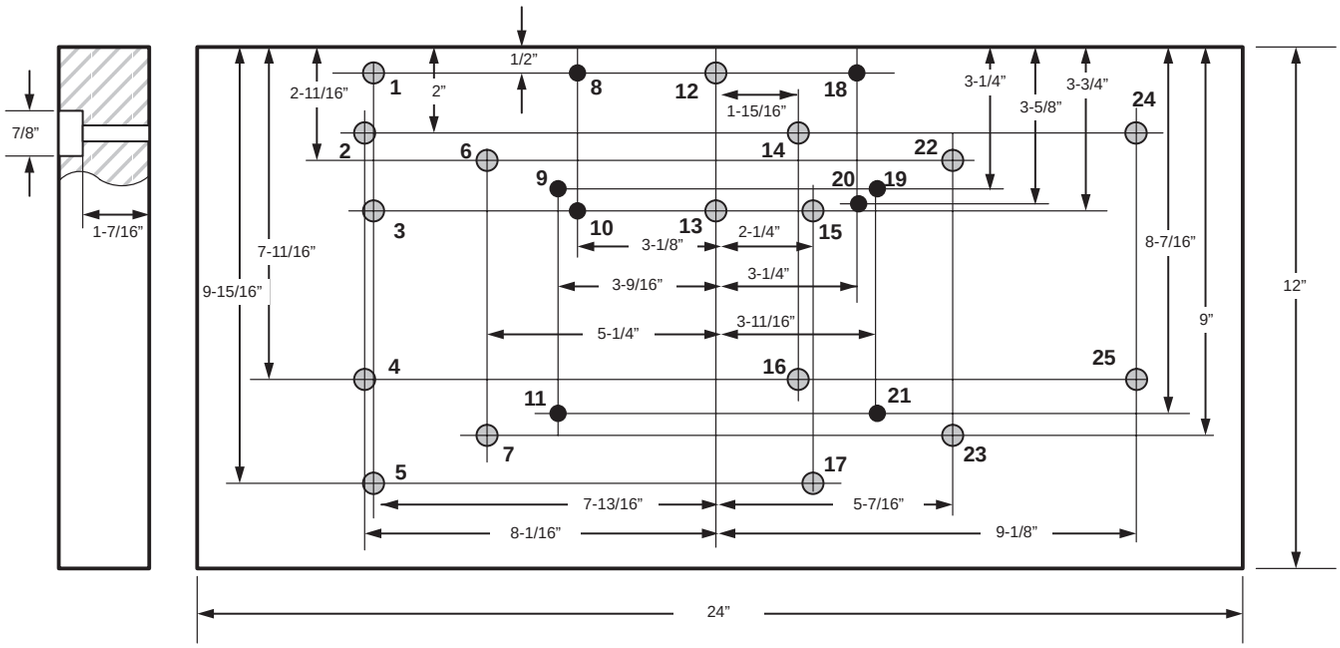

MODEL	USE HOLES	CARRIAGE BOLTS	MISC.
A, B, 9	2, 4, 14, 16	4 – 3/8" x 2–1/2"	
FH, FI, FJ	14, 16, 24, 25	4 – 3/8" x 2–1/2"	
H, L, T, Y	1, 3, 12, 13	4 – 3/8" x 2–3/4"	4 – 63092 Spacers
I – Narrow Base	8, 10, 18, 20	4 – 5/16" x 2–1/2"	
I – Wide Base	9, 11, 19, 21	4 – 5/16" x 2–1/2"	
K, Q, R, W, Z, ZZ, 23	6, 7, 22, 23	4 – 3/8" x 2–1/2"	
M, S	14, 16, 24, 25	4 – 3/8" x 2–1/2"	
N – Narrow Base	8, 10, 18, 20	4 – 5/16" x 2–1/2"	
N – Wide Base	9, 11, 19, 21	4 – 5/16" x 2–1/2"	
U – Narrow Base	8, 10, 18, 20	4 – 5/16" x 2–1/2"	
U – Wide Base	9, 11, 19, 21	4 – 5/16" x 2–1/2"	
WM, WMB, WMG	8, 10, 18, 20	4 – 5/16" x 2–1/2"	
WMI	9, 11, 19, 21	4 – 5/16" x 2–1/2"	
14	3, 5, 15, 17	4 – 5/16" x 2–1/2"	
WI – Narrow Base	8, 10, 18, 20	4 – 5/16" x 2–1/2"	
WI – Wide Base	9, 11, 19, 21	4 – 5/16" x 2–1/2"	
NS, 5, 6, 8	8, 10, 18, 20	4 – 5/16" x 2–1/2"	
* All Horizontal Cylinder Engines Require Special Mounting.			

TOOLS (cont'd)

TOOL NO.	DESCRIPTION	USE
19368	Ignition Tester	Check for ignition spark – All models except engines with Magnamatic. 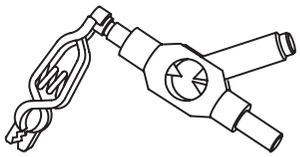
19063	Valve Spring Compressor	Remove and install valve springs – All models.
19069	Flywheel Puller	Remove flywheel – Model Series 6, 8, 6B, 8B, 60000, 80000, 90000, 100700, 110000, 120000. 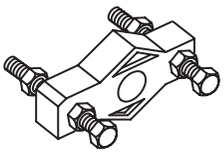
19070	Piston Ring Compressor	Compress piston rings – Model Series 6, 8, 6B, 8B, 60000, 80000, 90000, 100000, 110000, 120000, 130000. 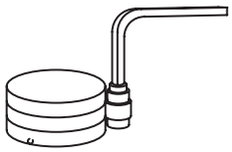

TOOLS (cont'd)

BRIGGS & STRATTON REPAIR TOOLS (Cont'd.)
The following tools, while not required, are recommended for complete engine repair.

TOOL NO.	DESCRIPTION	USE
19055	Plug Gauge	Reject gauge for breaker point plunger hole – Model Series N, 5, 6, 8, 6B, 8B, 23C, 60000, 80000, 90000, 100200, 100900, 110000, 130000, 140000, 170000, 190000, 220000, 250000. 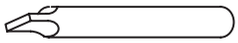
19056	Counterbore Reamer	Ream worn breaker point plunger hole – Model Series N, 5, 6, 8, 6B, 8B, 23C, 60000, 80000, 90000, 100200, 100900, 110000, 130000, 140000, 170000, 190000, 220000, 250000. 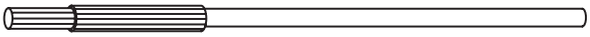
19057	Bushing Driver	Install breaker point plunger bushing – Model Series N, 5, 6, 8, 6B, 8B, 23C, 60000, 80000, 90000, 100200, 100900, 110000, 130000, 140000, 170000, 190000, 220000, 250000. 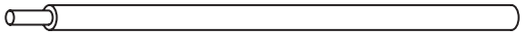
19058	Finish Reamer	Ream breaker point plunger bushing – Model Series N, 5, 6, 8, 6B, 8B, 23C, 60000, 80000, 90000, 100200, 100900, 110000, 130000, 140000, 170000, 190000, 220000, 250000. 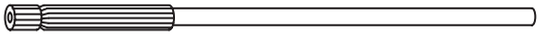
19126	Expansion Pilot	Guides cutter shank #19129, counterbore cutters #19131, #19132, #19133 – Cast Iron Model Series N, 5, 6, 8, - Guides valve seat driver #19136 – All Model Series. 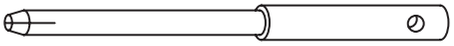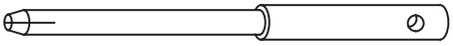
19127	Expansion Pilot	Guides cutter shank #19129, counterbore cutters #19131, #19132, #19133 – Cast Iron Model Series 9, 14, 19, 23, 190000, 200000, 230000, 240000 – Guides valve seat driver #19136 – All Model Series.